SINGER
71-30 TO 71-47

USE SINGER* OILS and LUBRICANTS

They insure freedom from lubricating trouble and give longer life to sewing equipment

---

The following are the correct lubricants for this machine:

TYPE B — MANUFACTURING MACHINE OIL, HEAVY GRADE

When an oil is desired which will produce a minimum of stain on fabrics, even after a long period of storage, use:

TYPE D — MANUFACTURING MACHINE OIL, HEAVY GRADE

BALL BEARING LUBRICANT

This pure grease is specially designed for the lubrication of ball bearings and ball thrust bearings of motors and electric transmitters, ball bearing hangers of power tables, etc. **Furnished in 1 lb. and 4 lb. tins.**

OTHER SINGER LUBRICANTS

TYPE E — THREAD LUBRICANT

For lubricating the needle thread of sewing machines for stitching fabrics or leather where a thread lubricant is required.

TYPE F — MOTOR OIL

For oil lubricated motors and plain bearings in power tables and transmitters.

NOTE: All of the above oils are available in 1 quart, 1 gallon and 5 gallon cans.

GEAR LUBRICANT

This specially prepared grease is recommended for gear lubrication on manufacturing sewing machines.

7804

INSTRUCTIONS

FOR USING AND ADJUSTING

SINGER*

SEWING MACHINES

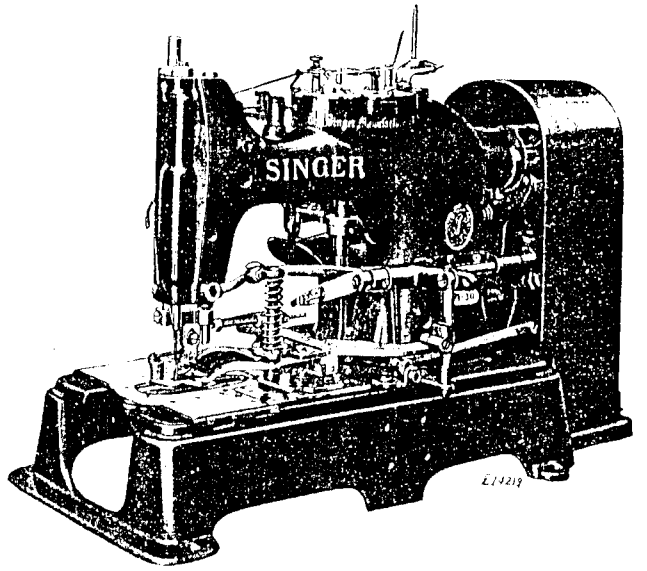

71-30 to 71-47

THE SINGER MANUFACTURING CO.

*A Trade Mark of THE SINGER MANUFACTURING COMPANY

DESCRIPTION

Machines of Class 71- are designed for automatically making straight buttonholes with the purl or whip stitch, and with or without barred ends according to the description of each machine. Buttonholes are made in cotton and linen fabrics, knit goods, etc.

‡**Machine 71-30** makes purl stitch buttonholes from 3/8 to 3/4 inch long with barred ends, and cuts the threads and hole after stitching.

‡**Machine 71-31** makes purl stitch buttonholes from 3/8 to 3/4 inch long with wide barred ends, and cuts the threads and hole after stitching.

Machine 71-32 makes purl stitch buttonholes from 3/8 to 1 1/2 inches long with barred ends, and cuts the threads and hole after stitching.

Machine 71-47 tacks and finishes the ends of binding on corsets, making a whip stitch tack from 1/4 inch upward. The machine is adjustable according to the width of binding and number of stitches desired. It has no barring or cutting device.

‡ *NOTE:* Buttonholes 1 inch long can also be made on Machines 71-30 and 71-31, by substituting clamp check 39639 for clamp check 39606 and using a 1 inch knife.

To Set Up Machines on SINGER Universal Power Tables

The machine is usually set so that its face plate is toward the edge of the table nearest the operator, about midway between the leg sections.

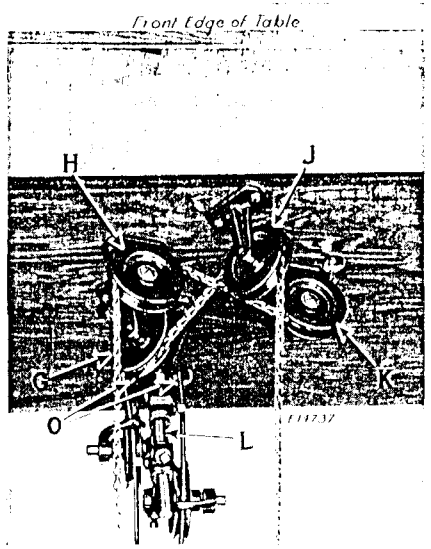

Fig. 2. Underside of Power Table, showing Belt and Chain Guides for Low Shaft Drive

One hole should be bored for the chain to connect with the lever (B, Fig. 16) and another hole for the chain to connect with the starting lever (C, Fig. 18).

There are four treadle chain pulleys (G, H, J and K, Fig. 2), each consisting of a bracket and a single pulley. Fasten one of these pulleys (K, Fig. 2) to the underside of the table directly below the clamp lifting lever (B, Fig. 16) and in line with the

chain adjusting slide on the left hand treadle. Fasten the second pulley (H) to the underside of the table directly over the chain adjusting slide and in line with the first pulley (K). Fasten the pulley (G, Fig. 2) to the underside of the table directly below the starting lever (C, Fig. 18) and in line with the chain adjusting slide on the right hand treadle. Fasten the fourth pulley (J, Fig. 2) to the underside of the table directly over the chain adjusting slide on the right hand treadle and in line with the pulley (G).

Pass one chain from the left treadle straight up and over the pulley (H) and under the pulley (K), then up through the hole in the table and fasten to the clamp lifting lever (B, Fig. 16). Pass the second chain from the right treadle straight up and over the pulley (J) and under the pulley (G), then up through the hole in the table and fasten to the starting lever (C, Fig. 18).

If the machine is to be driven by a pulley mounted on either a floor or table shaft to the rear of the idler bracket complete (L), the idlers and idler arm should be assembled with the pulleys mounted in the two holes of the arm furtherest from the vertical rod hole, as shown at N, Fig. 3. Should it be necessary to drive the machine from a shaft lying between the rear of the machine and the front of the table, the two pulleys should be assembled with the pulleys mounted in the holes of the arm nearest to the vertical rod hole, as shown at M, Fig. 3.

Two belt holes (O, Fig. 2) should be bored in the table directly below the machine driving pulley according to the location shown by the blueprint furnished with the machine and the belt idler (L, Fig. 2) mounted on the underside of the table directly below these two holes (O). The belt should be applied around the pulley on the shaft, around the idlers, up through the holes (O) in the table and around the pulley on the machine.

To Set Up Machines on Universal Power Table with SINGER Electric Motor

The foregoing instructions should be followed with the exception that the belt idlers (L, Fig. 3) and arms must be assembled

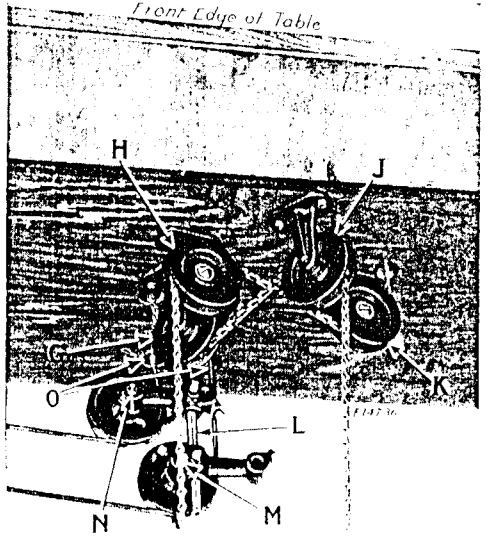

Fig. 3. Underside of Table, Showing Location of Idler and Treadle Chain Guides for Individual SINGER Electric Motor Operation of Class 71- Machines

as illustrated in Fig. 3. The belt should be applied around the pulley of motor, around the idlers, up through the holes (O, Fig. 3) in the table and around the pulley of the machine.

Machines Run in Pairs

When machines are run in pairs and driven from a table or floor shaft, they must have belt and belt idlers installed the same as two individual machines and the chain pulleys mounted according to the blueprint furnished with the machine.

To install one motor for driving two machines run in pairs, the motor should be mounted directly below the center line between the two machines with the driving pulley towards the front of the table as illustrated in Fig. 4. The belt idler pulleys (R, Fig. 4) must be mounted on their arms (S) as illustrated in Fig. 4 and the chain pulleys mounted according to the blueprint furnished with the machine. When individual motors are used for each machine in pairs, there are no belt idlers used under the table and the motors are set directly below the machine pulley and on the same angles that each machine is set with respect to the table.

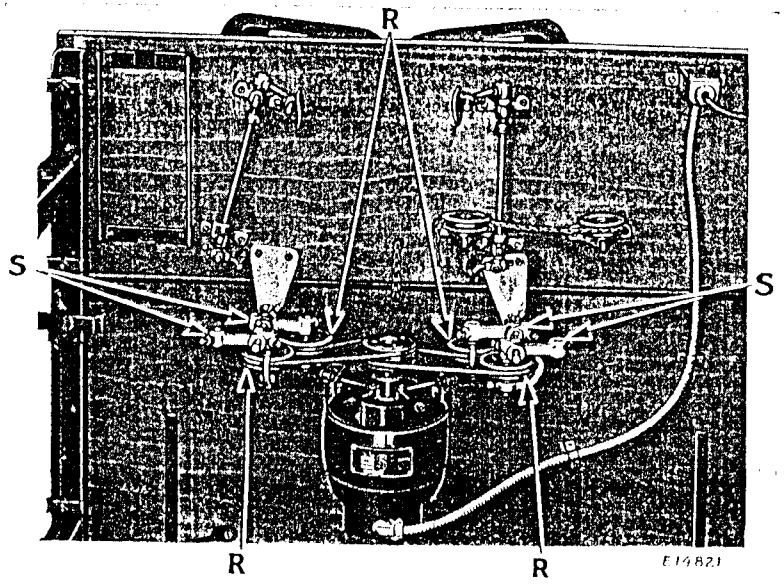

Fig. 4. Underside of Table, Showing Location of Idlers, Treadle Chain Guides and SINGER Electric Transmitter Motor for Class 71- Machines when Operated in Pairs

Needles

Needles for Machines 71-30 to 71-47 are of Class and Variety 71 x 1, furnished in sizes 11, 13, 14, 16, 18, 19 and 21; and 71 x 3, furnished in sizes 11, 13, 14, 16 and 18.

The size of the needle to be used should be determined by the size of the thread which must pass freely through the eye of the needle. If rough or uneven thread is used, or if it passes with difficulty through the eye of the needle, the successful use of the machine will be interfered with.

Orders for needles must specify the **quantity** required, the **size** number, also the **class** and **variety** numbers separated by an x.

The following is an example of an intelligible order:

"100 No. 16, 71 x 1 Needles,"
"100 No. 14, 71 x 3 Needles."

The best stitching results will be obtained in using the needles furnished by the Singer Sewing Machine Company.

Thread

For purl stitch buttonholes use right twist thread in the needle.

For whip stitch buttonholes use left twist thread in the needle.

Either right or left twist thread may be used on the bobbin.

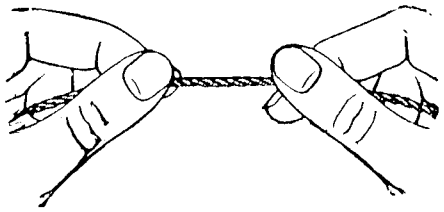

Fig. 5. How to Determine the Twist

Hold the thread as shown above. Turn the thread over toward you between the thumb and forefinger of the right hand; if left twist, the strands will wind tighter; if right twist, the strands will unwind.

For purl stitch buttonholes a heavier thread should be used in the needle than on the bobbin; for example, use No. 30 cotton in the needle with No. 70 or 80 cotton on the bobbin, or No. 40 cotton in the needle with No. 90 or 100 cotton on the bobbin.

For whip stitch buttonholes use the same size thread for the needle and the bobbin.

To Remove the Bobbin

Reach down under the bed of the machine with the thumb and forefinger of the left hand, open the bobbin case latch (B, Fig. 10) with the forefinger and lift out the bobbin case.

While the latch remains open the bobbin is retained in the bobbin case. Release the latch, turn the open end of the bobbin case downward and the bobbin will drop out

To Wind the Bobbin

Place the bobbin on the bobbin winder spindle and push it up closely against the shoulder, having the small pin in the spindle enter the slot in the bobbin.

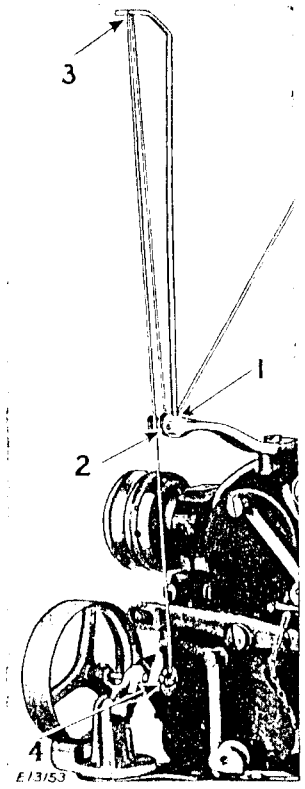

Fig. 6. Winding the Bobbin

Pass the thread from the unwinder through the thread guide (1, Fig. 6) on the tension bracket attached to the top of the machine, under between the tension discs (2, Fig. 6), through the thread guide (3, Fig. 6), wind the end of the thread around the bobbin (4, Fig. 6) a few times, then push the bobbin winder pulley against the moving belt. When sufficient thread has been wound upon the bobbin, the bobbin winder will stop automatically. Bobbins can be wound while the machine is stitching.

To Thread the Bobbin Case

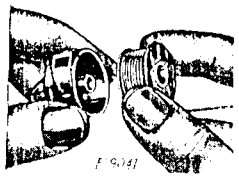

Fig. 7

Hold the bobbin between the thumb and forefinger of the right hand, the thread drawing on the bottom from the left toward the right (see Fig. 7).

With the left hand hold the bobbin case as shown in Fig. 7, the slot in the edge being near the top, and place the bobbin into it.

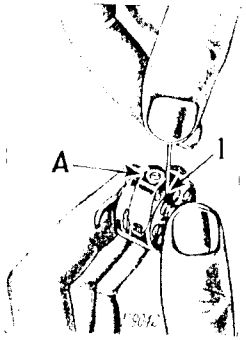

Fig. 8

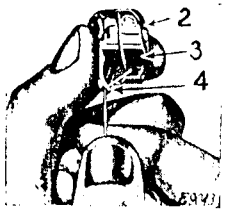

Fig. 9

Then pull the thread into the slot (1, Fig. 8) in the edge of the bobbin case, draw the thread under the thread guide (2, Fig. 9) and under the tension spring (3, Fig. 9), thence through the hole (4, Fig. 9) in the position finger, as shown in Fig. 9.

Note: The eyelet (4, Fig. 9) is omitted from the position finger of the bobbin case used in Machine 71-47.

To Replace the Bobbin Case

After threading, take the bobbin case by the latch (B, Fig. 10) holding it between the thumb and forefinger of the left hand.

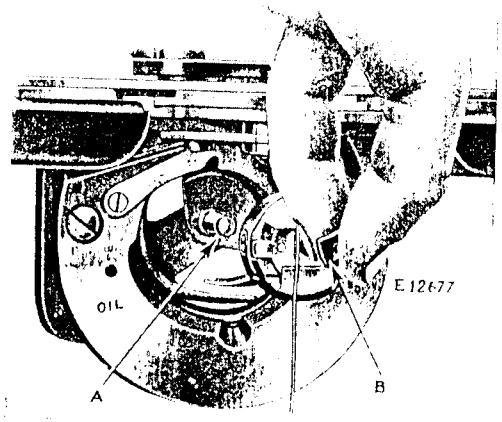

Fig. 10. Replacing the Bobbin Case

Place the bobbin case on the centre stud (A, Fig. 10) of the shuttle body with the position finger opposite the notch at the top of the shuttle race, release the latch and press the bobbin case back until the latch catches the groove near the end of the stud.

To Set the Needle

Loosen the set screw in the lower end of the needle bar and put the needle up into the bar as far as it will go with its long groove toward you and the eye directly in line with the arm of the machine, then tighten the screw.

To Regulate the Tensions

The tension on the needle thread is regulated by the thumb nut (A, Fig. 14). To increase the tension, turn the thumb nut (A) downwardly. To decrease the tension, turn the thumb nut (A) upwardly. The tension on the needle thread should be sufficiently strong enough to draw the purl evenly to the upper side of the buttonhole and should be regulated by the thumb nut (A, Fig. 14) only.

The tension (D, Fig. 14) on the side of the machine is set equal to the tension on the bobbin thread for making the whip stitch bar and must not be changed on machines using top tension.

On machines for making whip stitch the tension (D, Fig. 14) on the side of the machine should be adjusted to draw the lock into the edge of the goods.

The tension on the bobbin thread is regulated by the screw A, Fig. 8) in the bobbin case tension spring. To increase the tension, turn the screw downwardly. To decrease the tension, turn the screw upwardly.

For Purl stitch buttonholes the tension on the bobbin thread should be light.

To Thread the Needle on Machines with Tension on Top of Arm

Pass the thread from the thread unwinder into the lower hole (1, Fig. 11) in the upright rod above the machine, into the

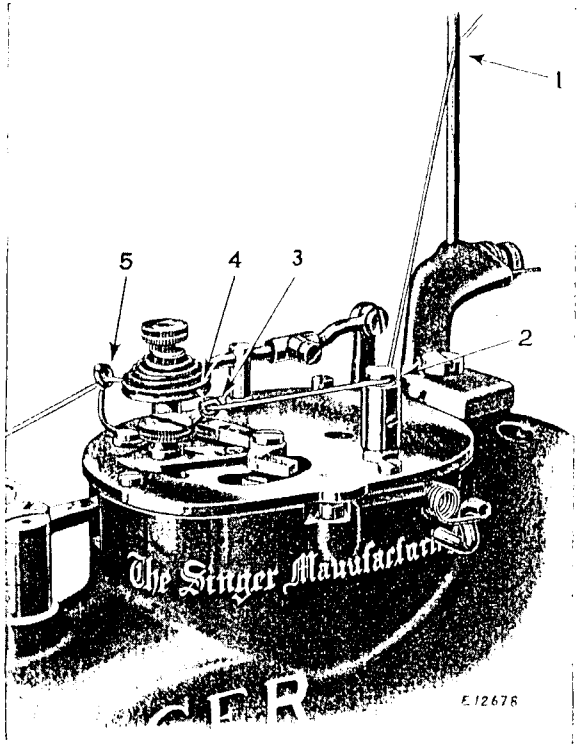

Fig. 11. Threading Tension on Top of Arm

thread retainer guide (2, Fig. 11), through the thread eyelet (3, Fig. 11), around the back between the tension discs (4, Fig. 11), through the thread eyelet (5, Fig. 11), into the thread retainer

guide (6, Fig. 12), down under and from back to front between the tension discs (7, Fig. 12), up into the thread take-up spring

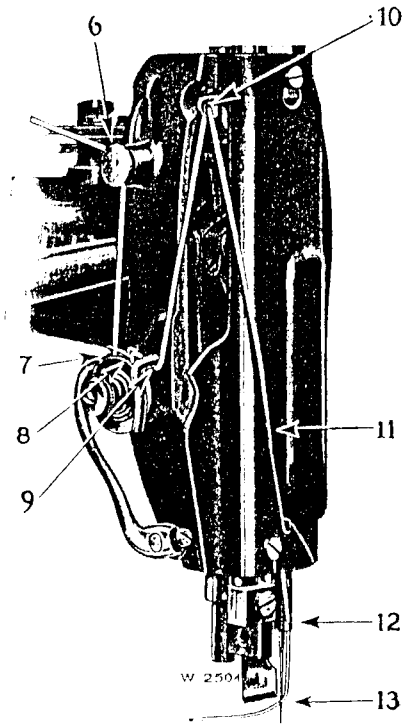

Fig. 12. Threading the Needle

(8, Fig. 12), under the tension thread guide (9, Fig. 12), up and from back to front through the hole in the end of the thread take-up lever (10, Fig. 12), into the slot in the face plate (11, Fig. 12), into the hole in the lower end of the needle bar (12, Fig. 12) and from front to back through the eye of the needle (13, Fig. 12). Draw about two inches of thread through the eye of the needle with which to commence sewing.

To Thread the Needle on Machines without Tension on Top of Arm

Pass the thread from the thread unwinder into the lower hole (1, Fig. 11) in the upright rod above the machine into the thread retainer guide (6, Fig. 12) on side of arm and then follow the above instructions pertaining to Fig. 12.

To Place the Fabric Under the Clamp and Start the Machine

Raise the clamp by depressing the left treadle and place the work under the clamp so that the position for the end of the buttonhole nearest you is under the needle, then let the clamp down and start the machine by depressing the treadle at the right.

To Stop the Machine While Stitching the Buttonhole

If the bobbin should become empty or the needle thread break while stitching, the machine can be stopped instantly by pressing inwardly on the lever (G, Fig. 14) under the left edge of the bed of the machine; this must not be done when the buttonhole is near completion as the knife would descend upon the throat plate instead of in the slot.

In this case draw toward you the lever (C, Fig. 14) at the left side of the machine to throw the knife out of operation and let the machine run until it stops automatically. Then move the clamp by means of the hand ratchet (E, Fig. 14) until the work comes directly under the needle at the point where the stitching was stopped, then start the machine and finish the buttonhole.

To Regulate the Length of Buttonhole

There is an opening in the bed of the machine covered by the slide (F, Fig. 14). Draw this slide to the left and remove

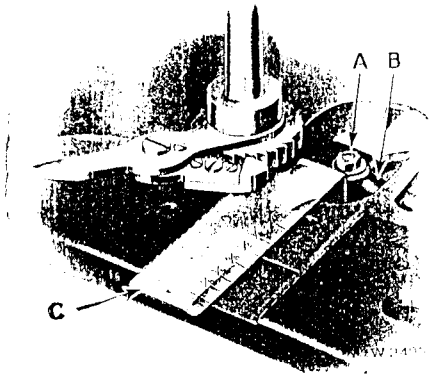

Fig. 13. Showing How to Regulate Length of Buttonhole Also Adjustments on the Machine

A. Nut for holding lever B in position.
B. Lever for regulating length of buttonhole.
C. Gauge for setting length of buttonhole.

it from the machine. The gauge (C, Fig. 13) marked for different lengths of buttonholes is furnished with the machine. Loosen the nut (A, Fig. 13) and place the gauge in the slideway as shown

in Fig. 13. Then move the regulating lever (B, Fig. 13) against the downwardly projecting part of the gauge, having the number on the gauge for the desired length of buttonhole opposite the line in the slideway and tighten the nut (A).

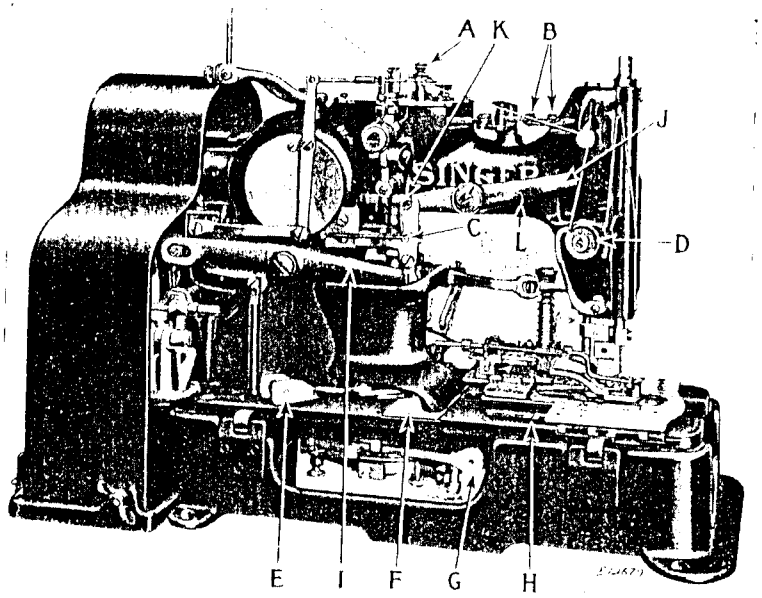

Fig. 14. Adjustments on the Machine

A. Thumb nut for regulating tension on needle thread.
B. Screws for aligning needle bar with knife.
C. Lever for throwing knife out of operation.
D. Needle thread tension discs.
E. Hand ratchet lever for moving the clamp.
F. Slide covering lever for regulating the length of buttonhole.
G. Lever for stopping the machine.
H. Screw for regulating the amount of cutting space.
I. Knife Lever.
J. Knife Bar Driving Lever.
K. Knife Bar Clamp.
L. Knife Bar Driving Lever Spring.

To Regulate the Distance Between Stitches

The distance between the stitches is regulated by the thumb nut (B, Fig. 18) which holds the end of the driving lever pitman in the slotted lever underneath the bed of the machine. To increase the distance between the stitches, loosen the thumb nut (B) and move it to the left. To decrease the distance between the stitches, move the thumb nut to the right. When the desired distance between the stitches has been obtained, tighten the thumb nut.

To Regulate the Width of Bight

The width of bight is regulated by the thumb screw (B, Fig. 15) which holds a movable stud in a slotted link at the top of the machine. To increase the width of bight, loosen the thumb screw (B) and move the stud to the left in the slot. To decrease the width of bight, move the stud to the right in the slot. When the desired width of bight is obtained, tighten the thumb screw.

To Regulate the Cutting Space

The amount of cutting space between the lines of stitching is regulated by the screw (H, Fig. 14) in the slot in the bed of the machine. To make the cutting space wider, loosen this screw and move it backward in the slot. To make the cutting space narrower, move the screw toward you in the slot, then tighten the screw.

When making buttonholes either in light or heavy materials the sewing should always be adjusted central to the knife, either with or without cutting space. To position the needle correctly use the following instructions for adjusting the knife slit in the needle plate and aligning the needle bar.

To Adjust the Knife Slit in the Needle Plate

When the knife descends to cut the buttonhole it must enter exactly in the centre of the slit in the needle plate. In case the knife does not enter in the centre of the slit, loosen the thumb screw (A, Fig. 18) under the bed of the machine and move the needle plate until the knife is in the centre of the slit, then tighten the thumb screw.

To Align the Needle Bar with the Knife

The needle bar frame pitman is adjustable by means of the two screws (B, Fig. 14); loosen these screws and move the needle bar frame until the needle on the right hand dip and knife are in exact alignment or to the left of the knife, half the amount of the cutting space, when the machine is moving up the first side of the buttonhole.

Should the knife cut too closely to the left hand side of the buttonhole the needle bar frame pitman should be adjusted so as to throw the needle slightly more to the left. In case the knife is cutting too closely to the right hand side of the buttonhole the needle bar frame pitman should be adjusted to throw the needle slightly more to the right.

To Regulate the Number of Barring Stitches

The plate at the top of the machine is marked with figures corresponding with the range of the number of barring stitches

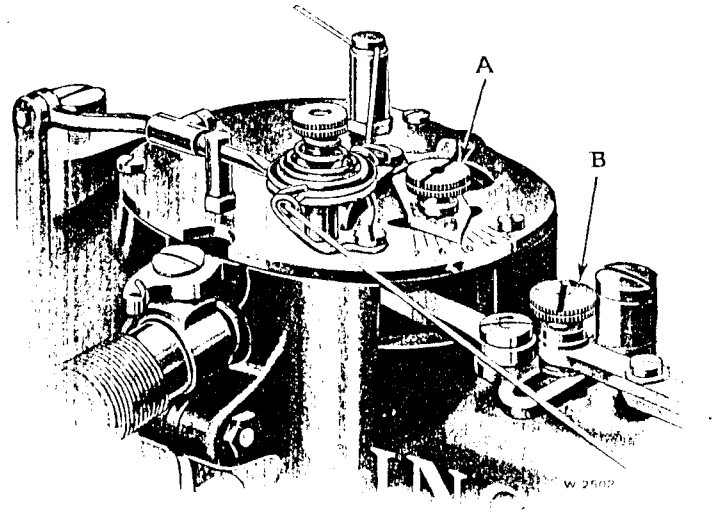

Fig. 15. Barring Stitch Regulator
Also Adjustments on the Machine

A. Thumb screw for regulating the number of barring stitches.
B. Thumb screw for regulating the width of bight.

that the machine will make. The pointer on this plate shows the number of barring stitches that the machine is ready to make. To change the number of barring stitches loosen the thumb screw (A, Fig. 15) and move the pointer until it points to the number corresponding with the desired number of barring stitches, then tighten the thumb screw.

To Set the Knife

Take out the set screw (H, Fig. 22) in the knife holder and remove the old knife. Place the new knife in the holder and push it up as far as it will go, then fasten it with the set screw. If the knife does not make full cut it should be set lower, the front edge of the knife should descend about $\frac{1}{16}$ inch below the top of the needle plate, but not low enough to strike the shuttle; the knife should be kept sharp to ensure clean buttonholes (see Instructions for using the Knife Grinder on pages 35 and 36).

To Oil the Machine

To ensure easy running and prevent unnecessary wear of the parts which are in movable contact, the machine must be oiled regularly. Use **"TYPE B"** or **"TYPE D" OIL**, sold by Singer Sewing Machine Company. See inside front cover for description of these oils. Oil should be applied at the places shown by arrows in Figs. 16, 17 and 18.

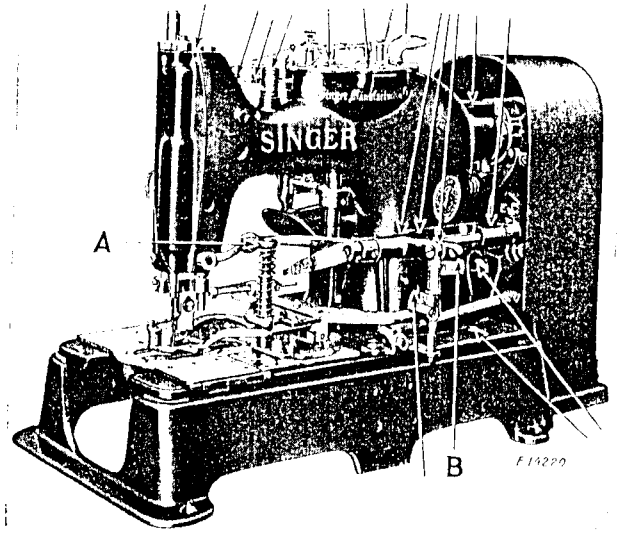

Fig. 16. Oiling Points at the Right of the Machine
Also Adjustments on the Machine

A. Thumb nut for regulating pressure on the clamp.
B. Lever for raising the clamp.

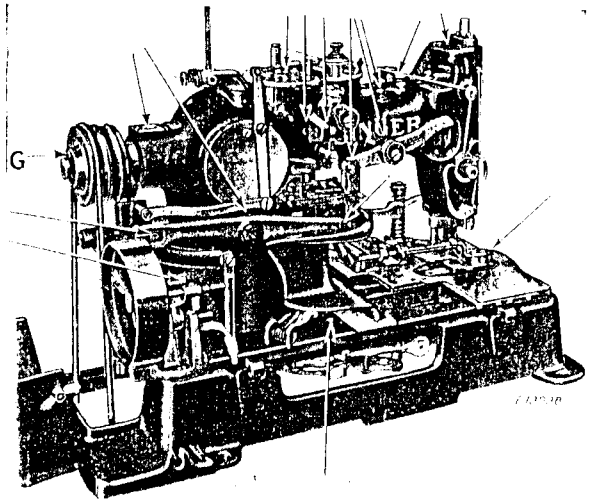

Fig. 17. Oiling Points at the Left of the Machine

To reach the parts underneath the bed, loosen the wing nut at the bottom and back of the hinged splash guard, turn the guard back, throw the belt off the pulley of the machine and turn the machine back on its hinges. The points to be oiled are shown in Fig. 18. Oil the shuttle bearing twice daily, see Fig. 20. Remove the screw (G, Fig. 17) and apply a small quantity of Ball Bearing Lubricant to the ball bearing of the pulley through the tapped hole, then replace the screw (G). Use **"BALL BEARING LUBRICANT,"** sold by Singer Sewing Machine Company.

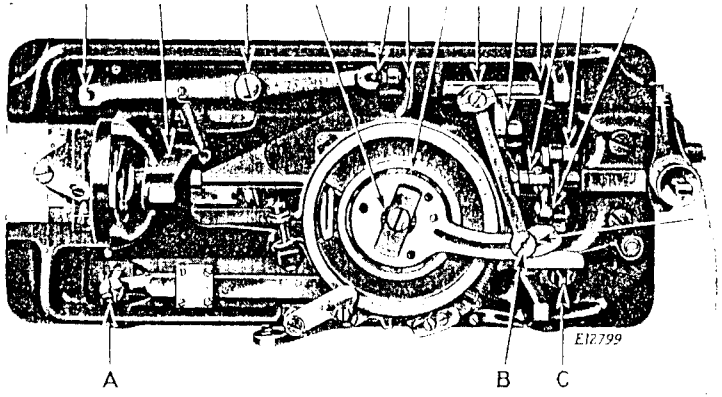

Fig. 18. Oiling Points in the Base of the Machine
Also Adjustments on the Machine

A. Thumb screw for bringing slit in needle plate under knife.
B. Thumb nut for regulating distance between stitches.
C. Lever for starting the machine.

INSTRUCTIONS

FOR

ADJUSTERS AND MACHINISTS

To Set the Needle Bar at the Correct Height

Turn the driving pulley of the machine until the needle bar moves down to its lowest point. When the needle bar is in this

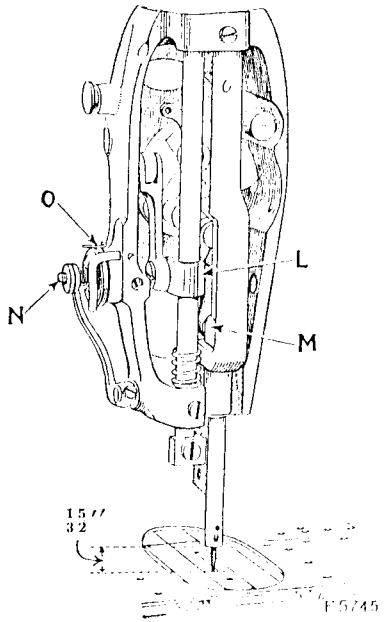

Fig. 19. Showing Correct Height of Needle Bar

position, the bottom end of the needle bar should be about $\frac{15}{32}$ inch above the top surface of the needle plate, as shown in Fig. 19. In case the needle bar is not set at the correct height, loosen the screw which holds the needle bar to the connecting stud (M, Fig. 19). (This screw can be reached when the needle bar is at its lowest point by inserting a screwdriver through the hole provided for the purpose in the arm.) After loosening the screw, move the needle bar up or down in the connecting stud until it is at the correct height, as instructed above, then securely tighten the screw in the needle bar connecting stud.

To Time the Shuttle

Turn the driving pulley of the machine until the needle bar on its left hand throw has moved down to its lowest point and

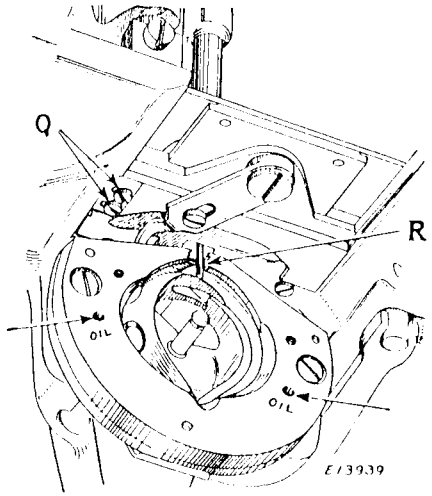

Fig. 20. Showing Shuttle Correctly Timed

has risen about 1-10 inch. When the needle bar is in this position, the point of the shuttle should be at the centre of the needle and the eye of the needle should be about $\frac{1}{16}$ inch below the point of the shuttle, as shown at R, in Fig. 20. The correct timing of the shuttle is obtained by carefully tightening the upper screw (S, Fig. 21) in the shuttle crank squarely against the flat part of the shuttle shaft and then tighten the other screw.

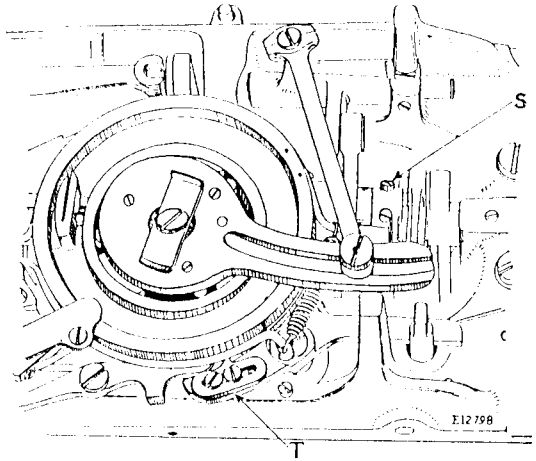

Fig. 21. Showing Shuttle Crank and Feed Wheel Tripping Point

To Adjust the Thread Retainer

The thread retainer (XX, Fig. 29) should be adjusted to produce a very light tension on the thread. The tension should only be heavy enough to hold the thread take up spring forward. To adjust the thread retainer, loosen the screw at its side and move the thread retainer up or down, as required, then securely tighten the set screw.

To Adjust the Thread Take-up Spring

The tension on the thread take-up spring (O, Fig. 19) should be just sufficient to take up the slack of the needle thread until the eye of the needle reaches the goods in its descent. The tension on the thread take-up spring is regulated by turning the tension stud (N, Fig. 19) over to the right to increase the tension, or over to the left to decrease the tension.

To Set the Knife Bar

Draw the starting lever (EE, Fig. 23) forward out of engagement with the stop cam, hold the knife lever (I, Fig. 14) down so that the stud in the rear end of the knife bar driving lever (J, Fig. 14) is held against the top end of the slot in the connecting link, as shown at K, Fig. 14. Loosen the screw in the knife bar clamp (L, Fig. 19) and adjust the knife bar so that there is a clearance of approximately $\frac{1}{64}$ inch between the top of the knife bar and the inside of the top of the knife bar stop, then tighten the screw in the knife bar clamp.

The tension on knife bar driving lever spring (L, Fig. 14) should be just sufficient to hold the knife bar in its elevated position. Excessive tension on this spring may cause the knife bar to operate with force sufficient to break the knife bar stop.

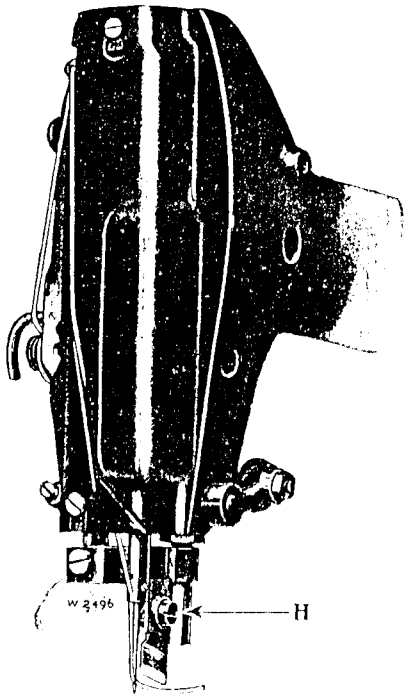

Fig. 22. Showing Correct Adjustment of the Knife Holder

To Time the Knife

The knife tripping collar (V, Fig. 23) 23467 should be timed to trip the catch (U, Fig. 23) 23464 just before the machine makes the second bar so that when the bar is finished, the knife will cut the buttonhole. In case the knife tripping collar (V) is not correctly timed, loosen the two set screws which hold the collar on the upright shaft and turn the collar to the required position, as instructed above, then securely tighten the two set screws in the collar.

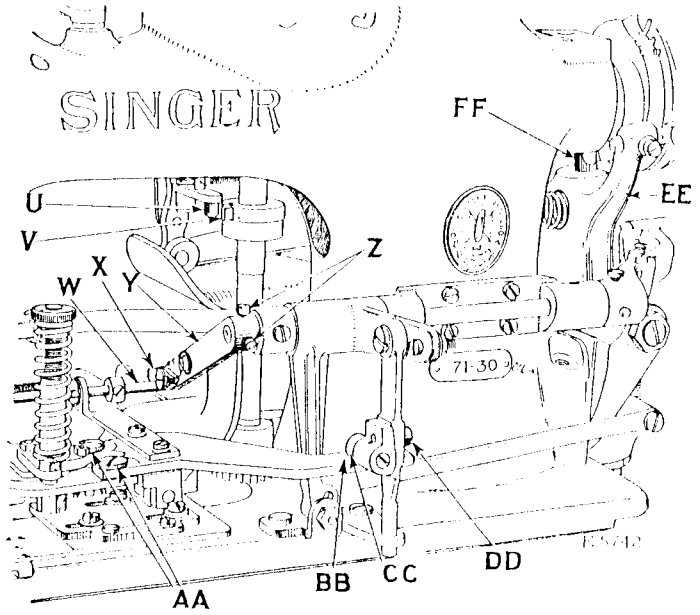

Fig. 23. Showing Upper Thread Trimmer Tripping Mechanism

To Time the Feed Wheel Tripping Point

The feed wheel tripping point (T, Fig. 21) should be set so that the clamp slide finishes its movement to the right before the knife descends to cut the buttonhole. In case the clamp slide does not finish its movement to the right at the correct time, loosen the two set screws which hold the tripping point (T) in position and move the tripping point forward to cause the clamp slide to stop its movement to the right earlier, or backward to stop later. When the feed wheel tripping point is correctly timed, securely tighten its two set screws.

To Time the Upper Thread Trimmer

The upper thread trimmer should be timed to cut the thread immediately after the buttonhole has been cut. In case the upper thread trimmer is not in correct time, turn the driving pulley of the machine until the stop cam interlocking rod rides on the highest point of the stop cam (GG, Fig. 24). When in this position, the lock pin (HH, Fig. 24) 40052 should be $\frac{1}{16}$ inch above the stop cam interlocking rod guide (JJ, Fig. 24) 23514 as shown in Fig.

24. If it is not, loosen the lock nut (KK, Fig. 24) in the tension releaser lever and turn the adjusting screw (LL, Fig. 24) in or out, as may be required, then securely tighten the lock nut (KK).

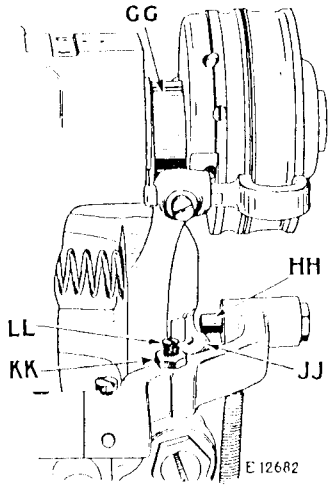

Fig. 24. Adjustments for Timing Upper Thread Trimmer

When the machine is running, the upper thread cutting lever shaft crank (Y, Fig. 23) 39612, should be set so that the latch (X, Fig. 23) 40057, has a slight play (about $\frac{1}{32}$ inch) as it rests on the thread cutting connecting rod (W, Fig. 23) 39610. The latch (X) can be adjusted to have the proper side play by loosening the two set screws (Z, Fig. 23) in the cutting lever crank and moving the crank up or down, as may be required, care should be taken not to move the crank (Y, Fig. 23) forward or back on shaft (see adjustment on page 29), now securely tighten the two set screws (Z).

To Remove and Replace the Upper Thread Trimmer

Remove the screw (OO, Fig. 25) from the connecting rod and take out the two clamp arm screws (MM, Fig. 25), then remove the clamp check from the machine. Remove the screw (RR, Fig. 26) from the underside of the clamp check which holds the clamping and trimming blades in position and remove the blades.

When replacing the blades, place the clamping blade (PP, Fig. 26) in position first next to the clamp check then put on the

trimming blade (QQ, Fig. 26) and securely fasten both blades in position by means of the screw (RR), being careful to set the clamping blade about $\frac{1}{16}$ inch in advance of the trimming blade as shown in Fig. 26. Then fasten the clamp check to the machine by means of the three screws (OO and MM, Fig. 25).

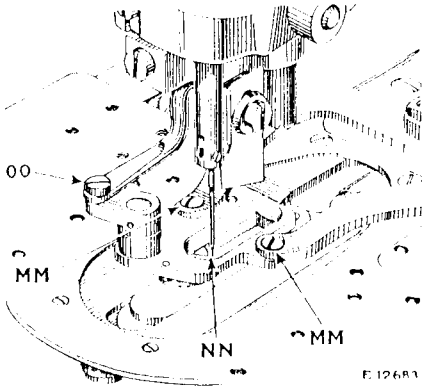

Fig. 25. Adjustments for Setting Upper Thread Trimmer

When the clamp check is in position on the machine, the back edge of the trimming blade should be flush with the front edge of the opening in the clamp check. The trimming blade can be set in this position by loosening the two screws (AA, Fig. 23), and moving the clamp arm forward or backward, as may be required, after which securely tighten the two screws (AA).

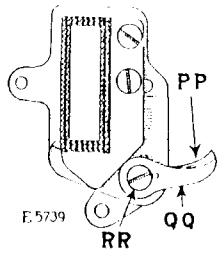

Fig. 26. Showing Upper Thread Trimming and Clamping Blades

When the trimming blade is being moved into cutting position, it must clear the needle by $\frac{1}{32}$ inch as shown at NN in Fig. 25, when the needle is on the inside throw on the finishing side of

the buttonhole. This clearance is obtained by loosening the two set screws (Z, Fig. 23) and moving the cutting lever crank (Y, Fig. 23) 39612, forward for more clearance or backward for less clearance, after which securely tighten the two set screws (Z).

To Remove and Replace Under Thread Trimmer

Turn the machine over on its hinges and remove the two screws (Q, Fig. 20) which hold the under thread trimming blade in position on the underside of the bed, then remove the trimming blade. Place the new trimming blade in position with its cutting edge between the under thread pull-off finger and the needle plate as shown in Fig. 20, and replace the two screws. Lower the trimming blade as far as it will go and adjust it straight, then securely fasten it in position by means of the two screws (Q).

To Remove and Replace Stop Cam Springs

In case the stop cam springs, which are enclosed in the tight pulley, should become broken, they can be removed and new springs inserted in their place as follows:

To remove the broken springs, see that the machine is in the regular stopping position. Remove the large screw at the end of the arm shaft and take off the loose pulley. Remove the taper head screws from the spring cover and withdraw the cover from the tight pulley, then remove the broken springs.

To place new springs into position, insert the long spring first in the tight pulley. To facilitate the replacing of the short spring, the use of special wrench 39978 (SS, Fig. 27) is recommended. This wrench will be furnished, on order, at an additional charge. Apply the wrench to the tight pulley as shown in Fig. 27, having the stud on the wrench enter the hole in the pulley. Then pull back the pulley with the wrench as far as it will go, thus compressing the long spring so that the short spring can be readily placed into position in the pulley, then remove the wrench.

After the springs are replaced, grease them with Singer High Speed Lubricant. This will lengthen the life of the springs. Then replace the spring cover with its position pins in the holes, and securely fasten the spring cover in place by means of the taper head screws. Replace the loose pulley and securely tighten the large screw at the end of the shaft.

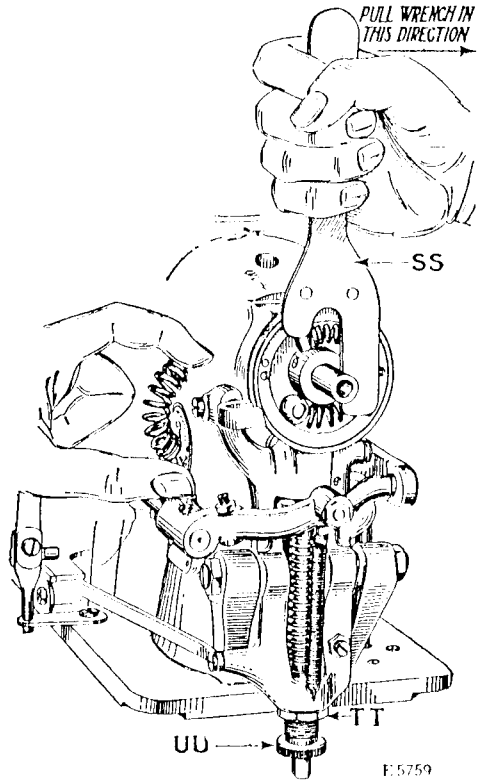

Fig. 27. Replacing Stop Cam Springs

To Regulate the Tension on the Stop Motion Interlocking Rod

The tension on the stop motion interlocking rod (FF, Fig. 23) should only be sufficient to prevent this rod from jumping out of the notch in the stop cam and sufficiently strong to retard the motion of the arm shaft when it stops the machine, thus minimizing the breaking of the stop cam springs.

When making buttonholes in heavy fabrics, it may be necessary to lighten the tension on the interlocking rod. To do this, loosen the lock nut (TT, Fig. 27) and turn down the screw (UU, Fig. 27) until the desired tension is obtained, then securely tighten the lock nut.

When making buttonholes in light weight fabrics, it may be necessary to increase the tension on the interlocking rod (FF), by turning up the screw (UU) until the desired tension is obtained.

To Adjust the Clamp Lifting Arm Connection

The clamp lifting arm connection roller (CC, Fig. 23) should be adjusted so that it just clears the clamp arm (BB, Fig. 23) when the clamp check is resting on the needle plate. The roller can be raised or lowered, as required, after loosening the adjusting screw (DD, Fig. 23) at the back of the clamp lifting arm connection. When the roller is set at the correct height, securely tighten the adjusting screw (DD). Care should be taken that the roller is not adjusted high enough to allow the thread pull-off finger 40039 (Fig. 20) to be in line with the descending needle when clamp rests on the goods.

To Set the Barring Cam

In case it is necessary to set the barring cam (WW, Fig. 28), the correct position of this cam can be ascertained by having the mark on the side of the cam in line with the mark on the upright shaft.

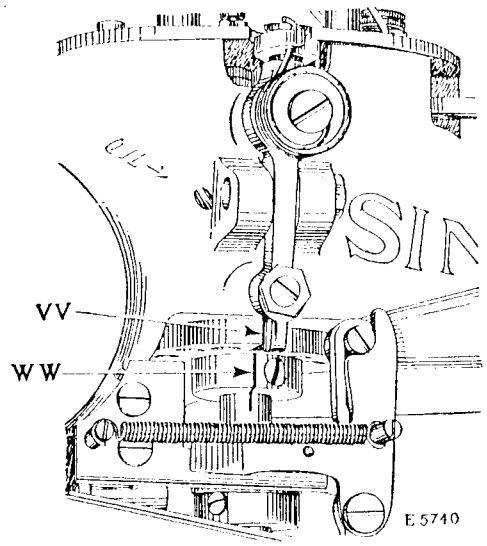

Fig. 28. Showing Timing Marks on Barring Cam and Upright Shaft

To Time and Adjust the Bar Tripping Mechanism

The number of barring stitches can be varied from 2 to 18 at the will of the operator.

To adjust and time the bar tripping mechanism, set the barring stitch indicator (C3, Fig. 29) at the numeral 6, as shown in Fig. 29, then pull the starting lever (EE, Fig. 23) forward and turn the machine driving pulley over to the left by hand until the needle bar frame regulator (B3, Fig. 29) reaches the end of its front throw, then ratchet the machine by means of the hand ratchet (E, Fig. 14) until the barring lever (VV, Fig. 28) drops into the barring cam (WW, Fig. 28).

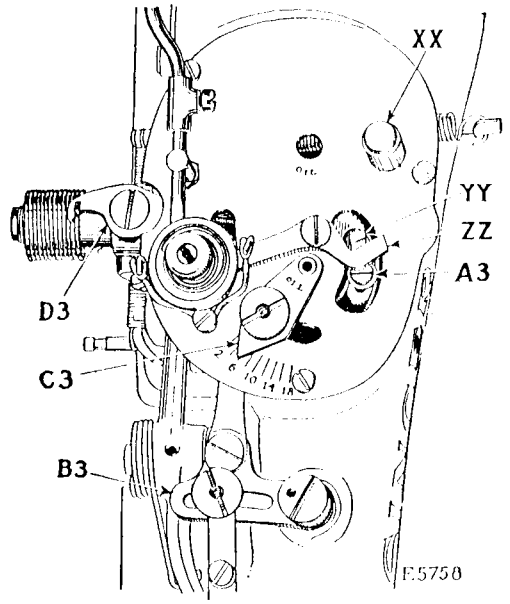

Fig. 29. Showing Adjustments for Timing Bar Tripping Mechanism

Starting from this position, turn the driving pulley over to the left and the machine should make five barring stitches. After making the fifth barring stitch, continue to turn the driving pulley slowly until the needle bar frame regulator (B3, Fig. 29) moves forward about two-thirds of its total forward travel. When in this position, the barring ratchet wheel tripping point (YY, Fig. 29)

23367 should come into contact with the barring tripping lever (ZZ, Fig. 29) 23370 and carry this lever forward, causing it to trip the barring lever catch (D3, Fig. 29) 23564, thus disengaging the barring mechanism. The needle bar frame regulator (B3) should then finish the other one-third of its forward travel.

In case the tripping point (YY) does not trip the barring tripping lever (ZZ) at the correct time, as instructed above, loosen the screw (A3, Fig. 29) and move the tripping point (YY) forward or backward, as may be required, then securely tighten the screw (A3).

To Time the Feed Eccentric

The feed eccentric (E3, Fig. 30) must be timed so that the work clamp will start its feeding movement when the point of

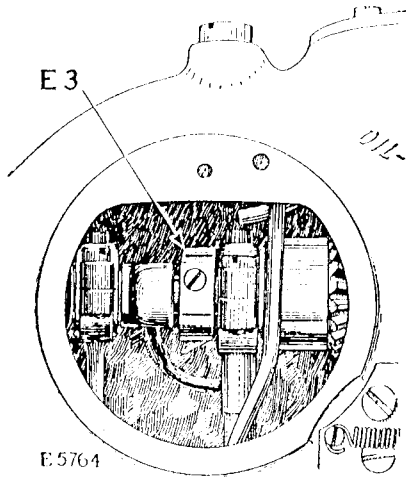

Fig. 30. Showing Feed Eccentric

the needle is $\frac{1}{8}$ inch above the needle plate, on the upward stroke of the needle bar. If the clamp starts its feeding movement too early, loosen the screw in the feed eccentric (E3) and turn the eccentric downwardly. If the clamp starts to feed too late, turn the eccentric upwardly. When the feed eccentric is correctly timed, securely tighten its set screw.

To Assemble Feed Clutch

Should it be necessary to disassemble the feed clutch, first remove each roller, spring and spring guide pin individually before removing the clutch roller carrier from clutch disc.

To assemble, insert clutch roller springs 255096 and spring guide pins 255097 to the clutch roller carrier 249549 (a small amount of grease applied to these springs and pins will assist in holding them in place). Assemble the roller carrier over the hub of the feed wheel.

CAUTION: Roller carrier 249549 must be assembled in position shown in illustration or clutch will not feed in the proper direction.

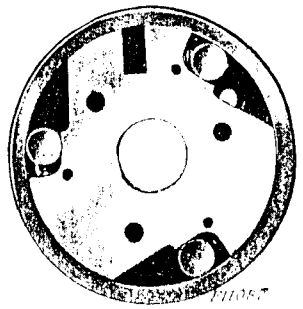

Fig. 31. Clutch Roller Carrier Assembly

With a small screw driver, push back the guide pins and slip the rollers 201897 into place, insert the oiling felt 249550 in the slot in the roller carrier and saturate it with oil. Attach feed wheel driving lever 249551 to the roller carrier with the three screws 185H, insert the felt washer 249558 and attach the driving lever plate 249557 to the feed wheel shaft with screw 52C. Be sure to tighten this screw as tight as possible.

INSTRUCTIONS

FOR USING

KNIFE GRINDER 701w51

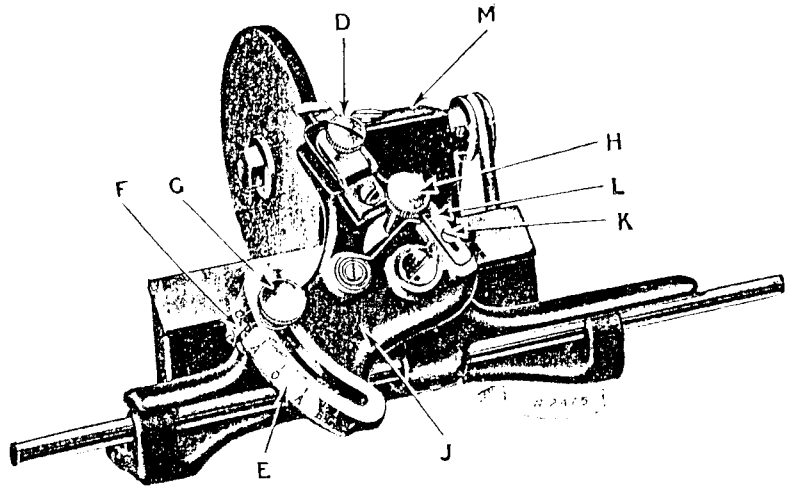

Fig. 32. Knife Grinder 701w51

The grinder should be set to turn away from the knife at a speed of about 2500 revolutions per minute. Clamp the knife in the holder as shown in the illustration and firmly tighten the clamping screw "D." To set the knife at the correct angle on the grinder, refer to the list on the following page to ascertain which of the letters "A", "B" or "C" on the turret "E" is to be brought into line with the pointer "F", the cutting edge of the knife being horizontal, then tighten the screw "G."

Start the grinder and turn the adjusting screw "H" to adjust the cutting edge of the knife so that it will barely graze the wheel while moving the sliding bracket "J" once to the right and left. **The least possible amount ground off is usually sufficient.** If more than a slight amount of the edge is ground off at one movement, the temper of the knife may be drawn until it is too soft for use.

Having sharpened one side of the knife, set knife stop "L" against lower end of knife and securely tighten screw "K". Withdraw the knife and replace it with the unsharpened side downward, then retighten the screw "D". It will then be necessary to change the position of the turret "E" to suit the angle of the reversed knife. If the turret has been set at "A" it should be moved to the other "A"; if at "B" to the other "B"; and if at "C" to the other "C". When the turret is moved to the correct position it should be securely fastened by the screw "G". Care should be taken to see that the knife is held securely against the stop and the turret properly set, thus assuring the proper bevel, equally made on both sides, with the cutting edge central.

When the knife has been ground it should be rubbed a little on an oil stone.

To oil the grinder push aside the cover "M" and put oil in the two oil holes thus uncovered.

Chart Showing Position of Turret When Grinding Various Knives

NO. OF KNIFE	LENGTH	POSITION OF TURRET	NO. OF KNIFE	LENGTH	POSITION OF TURRET
23443	$\frac{1}{4}$	B	23599	$\frac{13}{16}$	C
23444	$\frac{5}{16}$	B	23600	1	C
23445	$\frac{3}{8}$	B	39555	$1\frac{1}{16}$	A
23446	$\frac{7}{16}$	B	39556	$1\frac{3}{16}$	A
23447	$\frac{1}{2}$	B	39557	$1\frac{1}{16}$	A
23448	$\frac{9}{16}$	B	39558	$1\frac{1}{2}$	A
23449	$\frac{5}{8}$	B	39834	$\frac{3}{16}$	B
23450	$\frac{11}{16}$	B	39958	$\frac{3}{8}$	B
23451	$\frac{3}{4}$	B	39959	$\frac{7}{16}$	B
23452	$\frac{13}{16}$	A	39960	$\frac{1}{2}$	B
23453	$\frac{7}{8}$	A	39961	$\frac{9}{16}$	B
23454	$\frac{15}{16}$	A	39962	$\frac{5}{8}$	B
23455	1	A	39963	$\frac{11}{16}$	B
23456	$1\frac{1}{16}$	A	39964	$\frac{3}{4}$	B
23457	$1\frac{1}{8}$	A	249515	$\frac{3}{4}$	B
23458	$1\frac{3}{16}$	A			
23459	$1\frac{1}{4}$	A			
23588	$\frac{1}{4}$	B			
23589	$\frac{5}{16}$	B			
23590	$\frac{3}{8}$	B			
23591	$\frac{7}{16}$	B			
23592	$\frac{1}{2}$	C			
23593	$\frac{9}{16}$	C			
23594	$\frac{5}{8}$	C			
23595	$\frac{11}{16}$	C			
23596	$\frac{3}{4}$	C			
23597	$\frac{13}{16}$	C			
23598	$\frac{7}{8}$	C			

TO ALL WHOM IT MAY CONCERN:

The improper placing or renewal of the Trade Mark "SINGER" or any other of the Trade Marks of The Singer Manufacturing Company (all of which are duly Registered Trade Marks) on any machine that has been repaired, rebuilt, reconditioned, or altered in any way whatsoever outside a SINGER factory or an authorized SINGER agency is forbidden.