TABLE OF CONTENTS

Jig Drive / Jig Eject 3-2

Finger Guard/Spool Checker/Jig Flap Auto spart 3-6

Snubber Assembly 3-10

Knife Mechanism 3-12

Stitch Size Adjuster Assembly 3-14

Table And Frame 3-16

Electrical Box 3-18

Panel Kit 3-20

DLM-5400N-7 Parts List JUKI 3-25

Needle Bar, Upright Shaft & Hook driving Shaft Components 3-26

Main Shaft & Thread Take-Up Lever Components 3-30

Needle Bar, Upright Shaft & Hook driving Shaft Components 3-32

Hand Lifter Componets 3-34

Feed Mechanism Componets 3-36

Thread Trimmer Mechanism Components 3-40

Knife Components 3-44

Automatic Reverse Feed Components 3-48

Wiper Components 3-50

Oil Lubrication Components 3-52

Belt Cover & Bobin Winder Components 3-56

Thread Stand Componets 3-58

Table of Exchanging Gauge Parts 3-60

JIG DRIVE / JIG EJECT

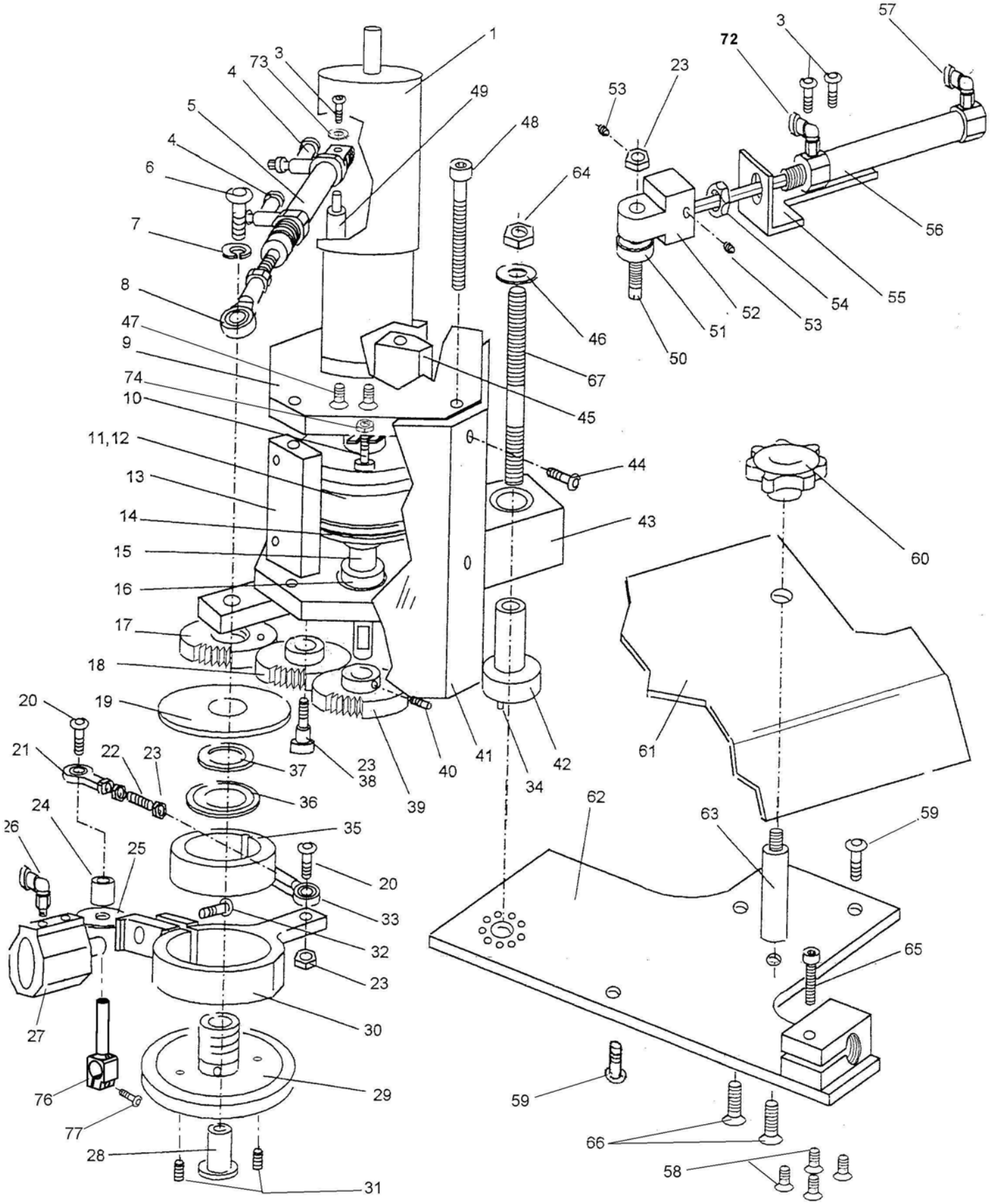

Revised 09/2005

E-mail: service@amfreece.cz; parts@amfreece.cz ; website: www.amfreece.com
Phones: +420 582 309 146 (Service), +420 582 309 286 (Spare Parts) ; Fax: +420 582 360 606

JIG DRIVE / JIG EJECT

DET	PART NUMBER	DESCRIPTION	QTY.
01	12.0008.4.580	Maxon Motor With Gearbox	1
02			1
03	08.6200.4.008	Button Head Screws M4x8	3
04	12.0008.3.621	Flow Control	2
05	12.0008.3.659	Jig Drive	1
06	08.6000.6.035	Button Head Screw M6x35	1
07	08.6852.6.000	Washer M6	1
08	12.0008.3.700	Rod End	1
09	84.0005.9.330	Motor Mounting Plate	1
10	08.6000.3.016	Cap Head Screw M3x16	1
11	84.0005.9.520	Clutch Assembly	1
12	84.0005.9.425	Adaptor Collar	1
13	84.0005.9.345	Support Pillar	2
14	84.0005.9.520	Clutch Assembly	1
15	84.0005.9.420	Lower Adaptor Collar	1
16	84.0005.8.220	Bearing	1
17	84.0005.9.517	Drive Wheel Gear	1
18	84.0005.9.518	Transfer Gear	1
19	84.0005.9.301	Nylon Dust Cover	1
20	08.6200.5.016	Button Hečad Screw M5x16	2
21	12.0008.3.701	Rod End	2
22	84.0005.9.380	Ling Stud	1
23	08.6702.5.000	Nut M5	5
24	84.0004.6.535	Oil Cover Tube	1
25	84.0004.6.530	Oil Cover	1
26	12.0008.3.411	Air Fitting	2
27	84.0005.9.522	Jig Drive Clamp Cylinder	1
28	84.0002.5.280	Pivot Spindle	1
29	84.0002.9.010	Drive Wheel	1
30	84.0005.9.300	Clamp Ring	1
31	08.6400.5.004	Screw M5x4	2
32	08.6200.5.012	Button Head Screw M5x12	1
33	84.0002.8.200	Rod End	1
34	12.1014.0.308	Roll Pin (3,2 mm)	1
35	84.0002.9.070	Bearing	1
36	84.0002.9.126	Dust Cover	1
37	84.0002.9.020	Washer	1
38	08.6500.5.010	Shoulder Bolt M5x10	1
39	84.0005.9.516	Cluth Gear	1
40	08.6400.4.010	Cap Hd. Screw M4x10	1
41	84.0005.9.495	Gead	1
42	84.0005.9.340	Mounting Arm Eccentric	1
43	84.0005.9.325	Mount Arm	1
44	08.6200.3.006	Buttopn Head Screw M3x8	3
45	84.0005.9.346	Support Pillar, Rear	1
46	08.6852.8.000	Washer M8	1
47	08.6100.3.010	Screw M3x10	2
48	08.6000.6.065	Cap Head Screw M6x65	3
49	84.0003.0.620	Drive Cylinder Stud	1
50	84.0005.5.115	Bearing Stud	1

E-mail: service@amfreece.cz; parts@amfreece.cz ; website: www.amfreece.com
Phones: +420 582 309 146 (Service), +420 582 309 286 (Spare Parts) ; Fax: +420 582 360 606

JIG DRIVE / JIG EJECT

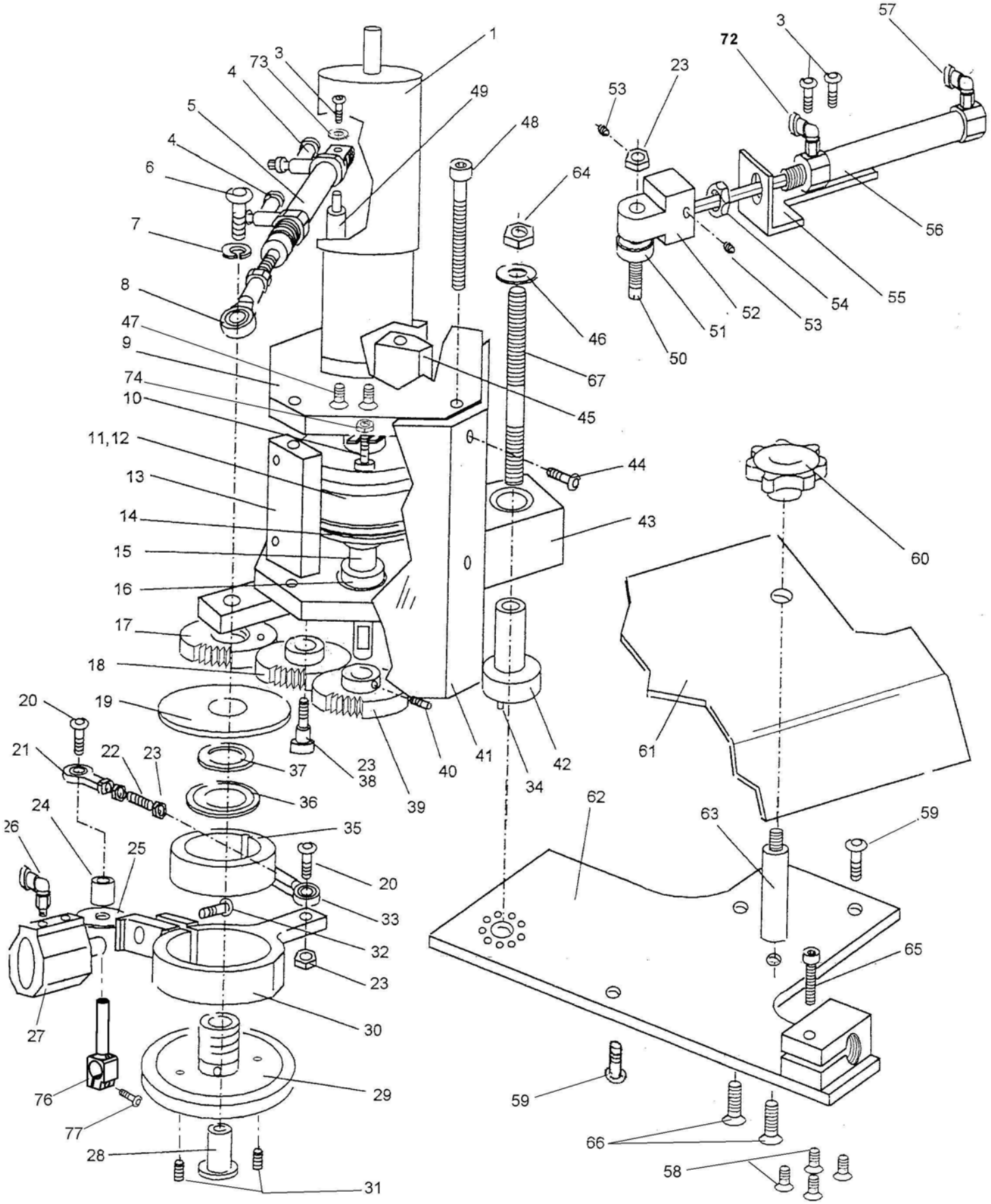

Revised 09/2005

E-mail: service@amfreece.cz; parts@amfreece.cz ; website: www.amfreece.com
Phones: +420 582 309 146 (Service), +420 582 309 286 (Spare Parts) ; Fax: +420 582 360 606

JIG DRIVE / JIG EJECT

DET	PART NUMBER	DESCRIPTION	QTY.
51	12.2010.0.003	Bearing	1
52	84.0005.9.355	Jig Eject Block	1
53	08.6400.4.005	Grup Screw M4x5	2
54	—	Lock Nut M10	1
55	84.0005.9.350	Jig Eject Bracket	1
56	12.0008.3.670	Jig Eject Cylinder	1
57	12.0008.3.411	Air Fitting	1
58	08.6100.3.008	Screw M3x8	4
59	08.6200.5.010	Screw M5x10	2
60	84.0004.6.525	Thumb Nut	2
61	84.0005.9.570	Drive Cover	1
62	84.0005.9.505	Base Plate	1
63	84.0005.9.110	Drive Cover Stud	1
64	08.6802.8.000	Lock Nut M8	1
65	08.6000.5.025	Cap Head Screw M5x25	1
66	08.6100.5.010	Countersunk Screw M5x10	2
67	84.0004.6.935	Oivot Stud	1
68	84.0005.9.550	Male Connector (Red)	3
69	84.0005.9.551	Female Connector (Red)	3
70	84.0005.9.552	Male Connector (Blue)	1
71	84.0005.9.553	Female Connector (Blue)	1
72	12.0008.3.521	Connector	1
73	08.6852.4.000	Washer M4	1
74	08.6702.3.000	Nut M3	1
75	84.0003.0.871	Bracket Shock Absorber	1
76	84.0005.9.140	Bracket	1
77	08.6000.5.016	Screw M5x16	2

E-mail: service@amfreece.cz; parts@amfreece.cz ; website: www.amfreece.com
Phones: +420 582 309 146 (Service), +420 582 309 286 (Spare Parts) ; Fax: +420 582 360 606

FINGER GUARD/SPOOL CHECKER/JIG FLAP AUTO SPART

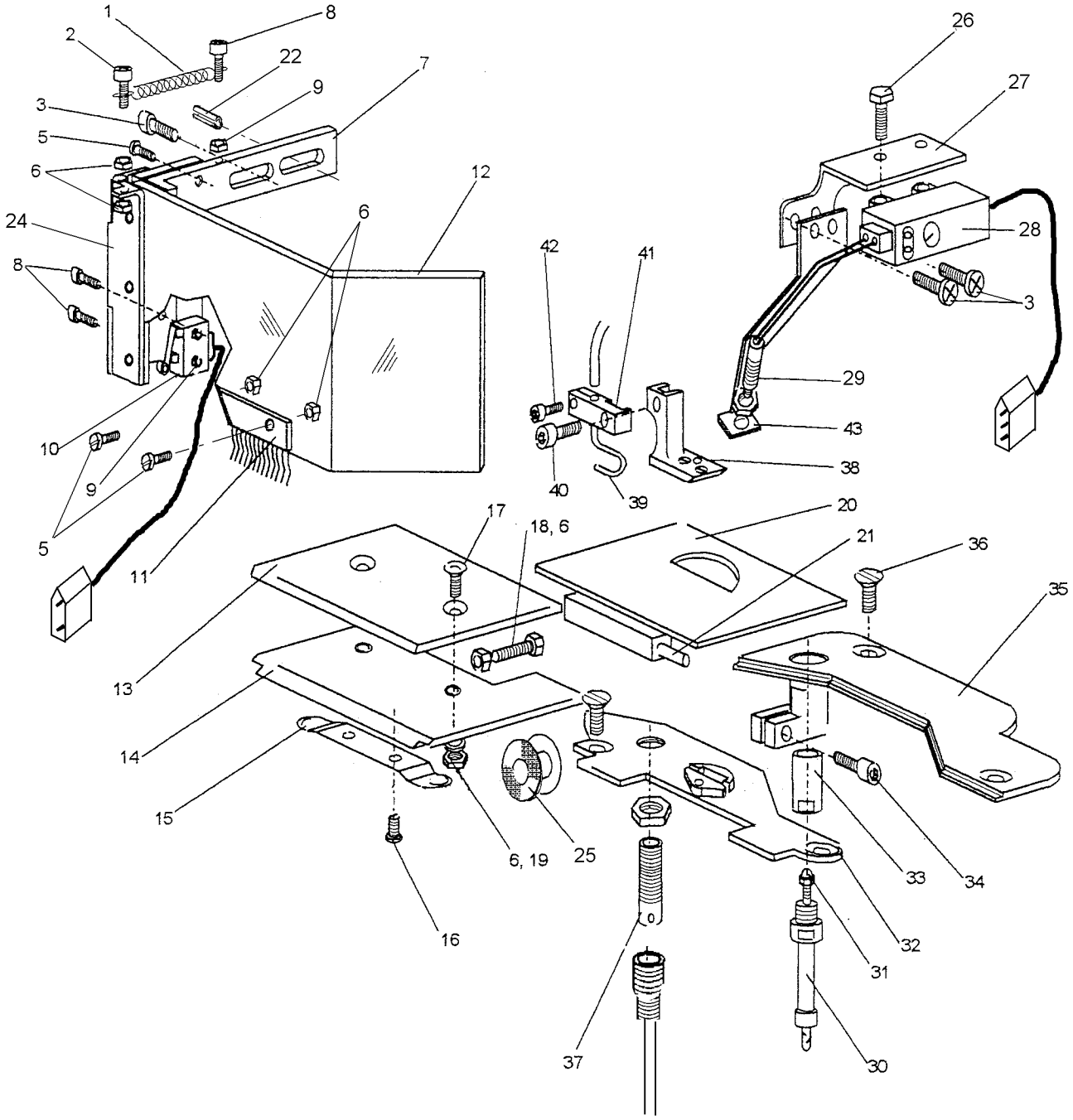

FINGER GUARD/SPOOL CHECKER/JIG FLAP AUTO SPART

DET	PART NUMBER	DESCRIPTION	QTY.
01	84.0005.9.501	Spring	1
02	08.6000.3.012	Cap Head Screw M3x12	1
03	08.6200.5.012	Cap Head Screw M5x12	3
04			
05	08.6200.3.008	Button Head Screw 3x8	4
06	08.6702.3.000	Nut M3	7
07	84.0005.9.170	Anti-Static Brush Bracket	1
08	08.6012.7.012	Pan Head Scvrew M2.5x12	3
09	08.6702.7.000	Nut M2.5	3
10	04.9084.0.714	Safety Switch Assembly	1
11	84.0005.9.502	Anti Static Brush	1
12	84.0005.9.500	Finger Guard	1
13	84.0005.9.050	Jig Flag Cover Plate	1
14	84.0005.7.010	Jig Eject Slide Plate	1
15	84.0004.6.750	Jig Flap Spring	1
16	—	Pan Head Screw M3x5	2
17	08.6100.3.010	Countersunk Screw M3x10	2
18	08.6312.3.012	Hex Head Screw M3x16	1
19	08.6802.3.000	Washer M3	1
20	84.0005.9.430	Jig Flap	1
21	84.0004.0.163	Throad Plate Locating Pin	1
22	12.1014.0.510	Spring Pin 5x10	1
23	12.0008.3.473		
24	84.0001.3.203	Hinge	1
25	84.0005.9.391	Nylon Dome Nut	1
26	—	Hex Head Screw M3x10	1
27	84.0005.9.087	Photocell Amplifier Bracket	1
28	04.9084.0.706	Photocell Amplifier Cable Assembly	1
29	84.0003.0.715	Photocell Head	1
30	12.0008.3.693	Ethed Spool	1
31	84.0005.9.515	Jig Flkap Cylinder	1
32	84.0005.9.365	Throat Plate - Front 3/16"	1
32*	84.0005.9.367	Throat Plate - Front 1/8"	1
32*	84.0005.9.368	Throat Plate - Front 1/4"	1
33	84.0005.9.390	Jig Flap Cyl. Mounting Tube	1
34	08.6000.4.012	Cap Head Screw M4x12	1
35	84.0005.9.366	Throad Plate - Rear	1
36	84.0005.9.016	Throad Plate Screw	4
37	12.0010.4.025	Sensor	1
38	84.0002.5.550	Presser Foot 3/16"	1
38*	84.0002.5.540	Presser Foot 1/8"	1
38*	84.0002.5.560	Presser Foot 1/4"	1
39	84.0002.5.440	Blower	1
40	08.7000.6.012	Cap Head Screw 6-40 x 1/2"	1
41	84.0002.5.450	Mounting Block	1
42	08.6000.3.006	Cap Head Screw M3x6	1
43	84.0005.9.088	Photocell Bracket	1

* — Extra Parts

E-mail: service@amfreece.cz; parts@amfreece.cz ; website: www.amfreece.com
Phones: +420 582 309 146 (Service), +420 582 309 286 (Spare Parts) ; Fax: +420 582 360 606

SNUBBER ASSEMBLY

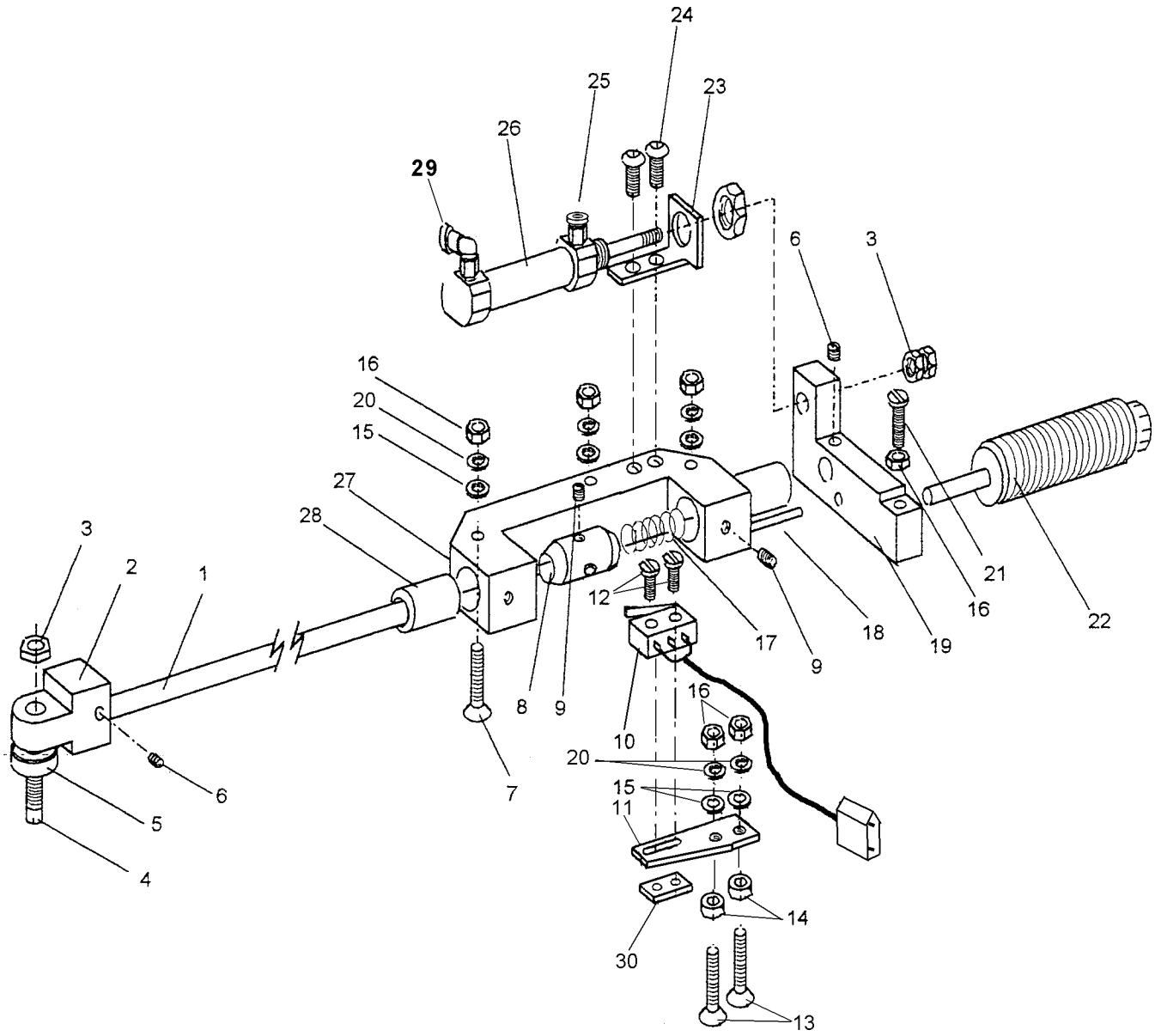

SNUBBER ASSEMBLY

DET	PART NUMBER	DESCRIPTION	QTY.
01	84.0003.0.821	Snubber Arm Bar	1
02	84.0003.0.802	Snubber Arm Block	1
03*	08.6702.5.000	Lock Nut M5	3
04*	84.0004.5.115	Bearing Stud	1
05	84.0002.8.251	Bearing	1
06	08.6400.4.008	Grub Screw M4x8	2
07	08.6100.3.030	Countersunk Screw M3x30	3
08	84.0003.0.835	Acuating Collar	1
09	08.6400.3.003	Grub Screw M3x3	3
10	04.9084.0.707	Snubber Switch Assembly	1
11	84.0005.9.370	Switch Mounting Plate	1
12*	08.6010.7.012	Pan Head Screw M2.5x12	2
13*	08.6100.3.016	Countersunk Screw M3x16	2
14	84.0003.0.860	Spacer	2
15*	08.6852.3.000	Washer M3	5
16*	08.6702.3.000	Nut M3	7
17	84.0003.0.805	Compresion Spring	1
18	84.0003.0.890	Lokating Pin	1
19	84.0005.9.415	Slide Block	1
20	08.6802.3.000	Spring Washer	5
21	08.6015.3.025	Nylon Screw M3x25	1
22	84.0003.0.870	Shock Absorber	1
23	84.0005.9.360	Jig Alignment Cylinder Bkt.	1
24*	08.6200.3.008	Button Head Scvrew M4x8	2
25	12.0008.3.621	Air Fitting	1
26	12.0008.3.649	Jig Alignment Cylinder	1
27	84.0003.0.790	Bearing Housing	1
28	84.0003.0.880	Bearing	2
29	12.0008.3.719	Connector	1
30	84.0003.0.900	Plate	1

* Modification —84-55 UJ

KNIFE MECHANISM

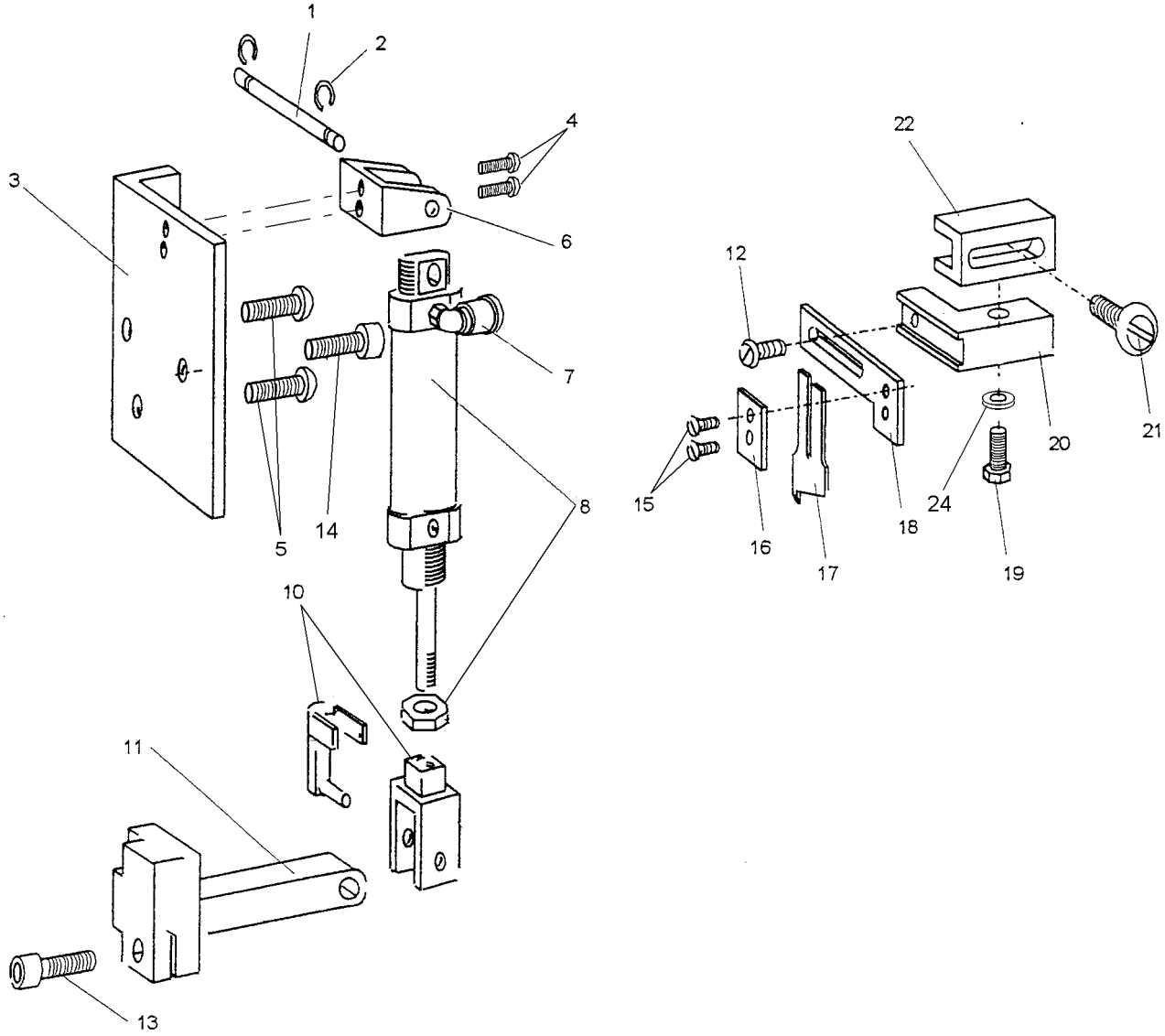

KNIFE MECHANISM

DET	PART NUMBER	DESCRIPTION	QTY.
01	—	Clevis and Pin Kit - Pin	1
02	—	Circlip	2
03	84.0005.9.011	Support Bracket	1
04	08.6200.6.010	Button Head Screw M6x10	2
05	08.6200.6.016	Cap Head Screw M6x16	2
06	12.0008.3.634	Clevis and Pin Kit - Clevis	1
07	12.0008.4.640	Air Fitting	2
08	12.0008.4.654	Knife Cylinder	1
09	08.6852.4.000	Washer	1
10	12.0008.3.673	Piston Rod End Clevis Pin	1
11	84.0005.9.013	Knife Lever	1
12	08.6012.1.008	Juki Slide Clamp Screw M3,5x8	1
13	08.6000.5.016	Cap Head Screw M5x16	1
14	08.7000.8.015	Screw 5/16-24x5/8	1
15	08.6112.7.006	Countersunk Screw M2.5x6	2
16	84.0005.9.172	Clamp Plate	1
17	84.0005.9.173	16mm Juki Knife	1
17	84.0005.9.161	9mm Juki Knife	1
18	84.0005.9.171	Juki Knife Adapter	1
19	08.6312.4.008	Hexagon Head Screw M4x8	1
20	84.0005.9.166	Slide Block	1
21	—	Juki Clamp Screw	1
22	84.0005.9.164	Asdjustable Knife Holder Bkt.	1

E-mail: service@amfreece.cz; parts@amfreece.cz ; website: www.amfreece.com
Phones: +420 582 309 146 (Service), +420 582 309 286 (Spare Parts) ; Fax: +420 582 360 606

STITCH SIZE ADJUSTER ASSEMBLY

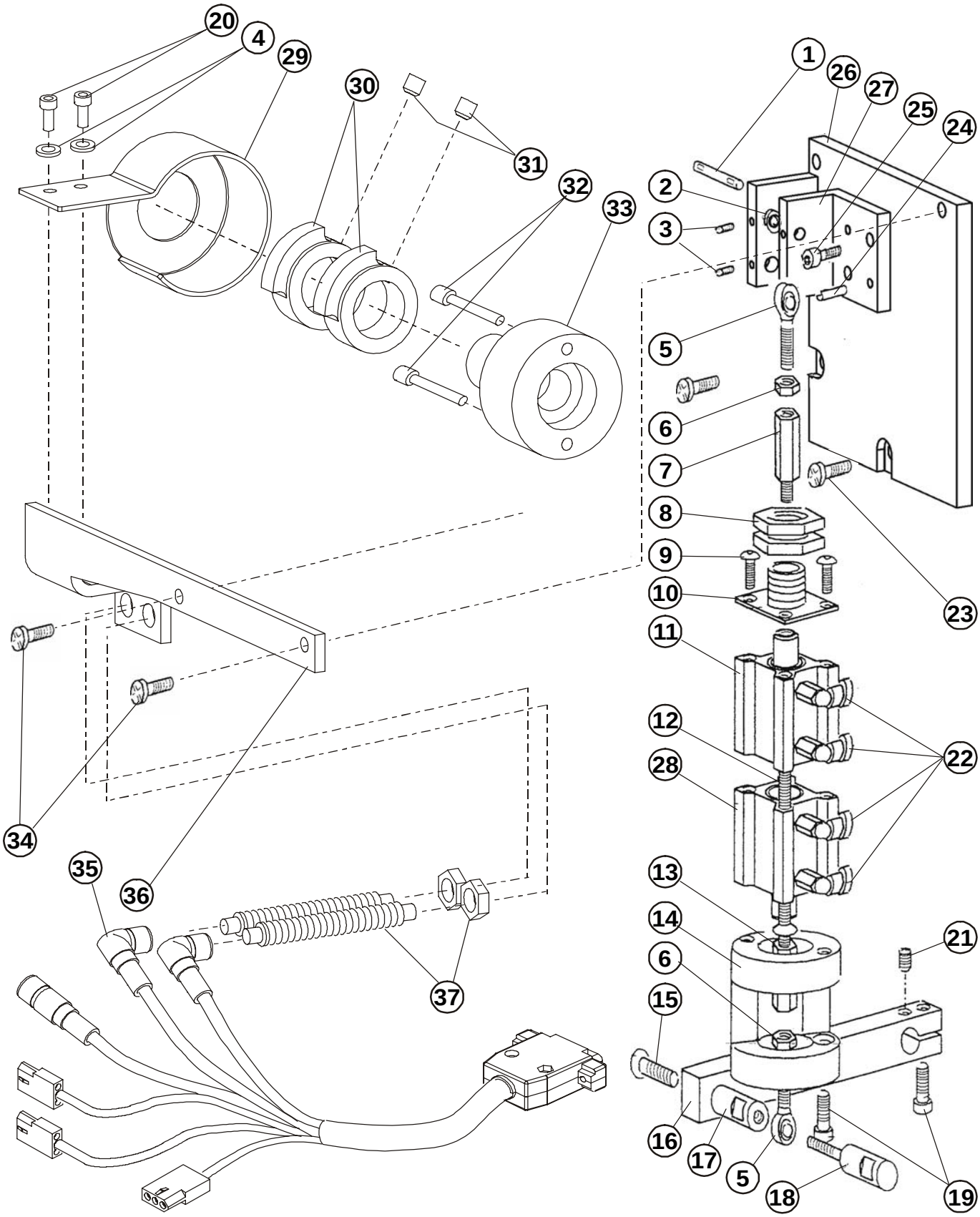

Revised 09/2005
E-mail: service@amfreece.cz; parts@amfreece.cz ; website: www.amfreece.com
Phones: +420 582 309 146 (Service), +420 582 309 286 (Spare Parts) ; Fax: +420 582 360 606

STITCH SIZE ADJUSTER ASSEMBLY

DET	PART NUMBER	DESCRIPTION	QTY.
01	84.0005.9.455	Stitch Size Adjuster Cyl. Pivot Pin	1
02	84.0005.9.450	Stitch Size Adjuster Cyl. Mtg. Spacer	2
03	08.6400.3.003	Grub Screw M3x3	2
04	08.6852.4.000	Washer M4	2
05	12.0008.3.718	Male Rod End Bearing M4	2
06	08.6702.4.000	Nut M4	2
07	84.0005.9.475	Top Stitch Size Adj. Adjuster Screw	1
08	84.0005.9.525	Lock Nut M12	2
09	08.6200.4.010	Botton Head Screw M4x10	2
10	84.0005.9.485	Top Stich Size Adj. Stop Adjuster	1
11	84.0005.9.490	Top Stitch Size Adjuster Cylinder	2
12	08.6000.4.040	Countersunk Screw M4x40	2
13	84.0005.9.480	Lower Stitch Size Adj. Adjstr. Screw	1
14	84.0005.9.470	Lower Stop	1
15	08.6100.6.020	Countersunk Screw M6x20	1
16	84.0005.9.065	Stitch Size Adjuster Actvating Bar	1
17	84.0005.9.465	Lower Stop - Female	1
18	84.0005.9.460	Lower Stop - Male	1
19	08.6000.4.020	Cap Head Screw M4x20	3
20	08.6200.4.008	Screw M4x8	2
21	08.6420.6.008	Cup Point Grub Screw M6x8	1
22	12.0008.3.411	Aitr Fitting	4
23	—	Juki Head Screw	4
24	12.1014.0.308	Roll Pin 3mm	2
25	08.6000.4.008	Cap Head Screw M4x8	2
26	84.0005.9.442	Stitch Size Adjuster Mounting Plate	1
27	84.0005.9.445	Upper Stitch Size Adj. Mtng. Bracket	1
28	84.0005.9.491	Bottom Stitch Size Adjuster	1
29	84.0005.9.061	Cover Sensor	1
30	19.0044.1.629	Ring Sensor	2
31	17.0011.2.013	Screw	2
32	08.6000.4.025	Screw M4x25	2
33	84.0005.9.056	Adaptor	1
34	01.1327.0.000	Screw	2
35	04.9084.0.705	Cable	1
36	84.0005.9.058	Holder Sensor	1
37	12.0010.4.025	Sensor	1

E-mail: service@amfreece.cz; parts@amfreece.cz ; website: www.amfreece.com
Phones: +420 582 309 146 (Service), +420 582 309 286 (Spare Parts) ; Fax: +420 582 360 606

AMF REECE
Better Ideas, Better Made

TABLE AND FRAME

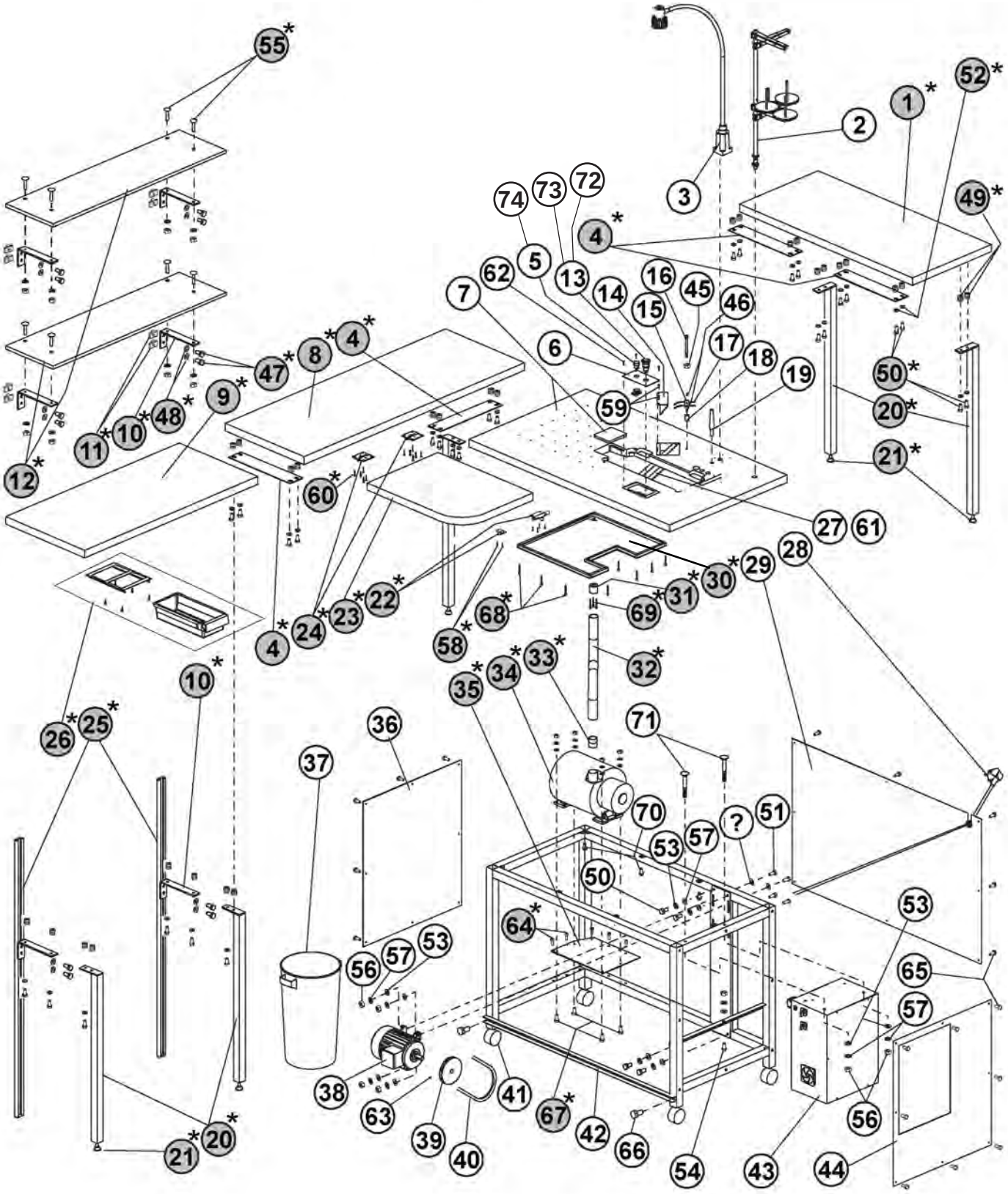

Revised 09/2005
E-mail: service@amfreece.cz; parts@amfreece.cz ; website: www.amfreece.com
Phones: +420 582 309 146 (Service), +420 582 309 286 (Spare Parts) ; Fax: +420 582 360 606

TABLE AND FRAME

DET	PART NUMBER	DESCRIPTION	QTY.
01*	84.0002.0.436	Extension (Small)	1
02	—	Thread Stand	—
03	12.0008.4.403	Halogen Lamp Kit 12V Assembly	1
04*	84.0004.6.580	Flitch Plate	4
05	12.0008.4.868	Start Button	1
06	84.0004.8.455	Stop/Start Plate	1
07	84.0005.9.038	Table Top	1
08*	84.0002.0.430	Extension, Large	1
09*	84.0002.0.435	Extension (Small)	1
10*	84.0004.9.100	Bracket (3 Bracket Optional)	6
11*	84.0002.1.062	Clamp, Nut M10	12
12*	84.0004.6.771	Shelves	2
13	12.0008.4.584	Emergeny Stop Head	1
14	84.0004.6.655	Waste Chute Edge Piece	1
15	84.0004.6.680	Waste Chute Blower Bracket	1
16	08.6000.6.080	Screw M6x80	1
17	84.0004.6.685	Waste Chute Blower	2
18	84.0004.6.790	Waste Spacer	1
19	84.0002.0.125	Aujig Wooden Peg	1
20*	84.0002.0.352	Support Leg (Short)	5
21*	84.0002.0.016	Adjustable Foot	5
22*	12.0008.6.220	Bolting Devices	1
23*	84.0002.0.440	Hingen Flap	1
24*	12.0008.6.219	Hinge	2
25*	84.0002.0.345	Support Leg (Long)	2
26*	12.0008.6.901	Draver Kit	1
27	84.0004.6.655	Waste Chute	1
28	12.0008.4.713	Cable	1
29	84.0004.6.720	Rear Panel	1
30*	84.0004.9.420	Air Flotation Box	1
31*	84.0004.6.820	Adaptor	1
32*	84.0004.6.815	Hose	1
33*	84.0004.9.036	Adaptor	1
34*	12.0008.3.267	Blower Unit	1
35*	84.0004.6.560	Blower Unit Mounting Plate	1
36	84.0004.6.725	Side Panel	1
37	84.0002.0.380	Auojig Large Cloth	1
38	12.0008.4.594	Motor	1
39	84.0005.9.057	Pulley	1
40	12.5050.1.502	V Beklt	1
41	12.0008.6.517	Caster	(4)
42	04.9084.0.002	Frame Assembly	1
43	04.9084.0.501	Electro Box Assembly	(1)
44	04.9034.0.401	Frame R. S. Panel	(1)
45	08.6702.6.000	Nut M6	1
46	08.6400.3.005	Scvrew M3x5	2
47*	08.6312.0.020	Screw M10x20	12
48*	08.6852.0.000	Washer M10	12
49*	08.6752.8.000	Nut M8	28

* Modification —84-55 UJ

TABLE AND FRAME

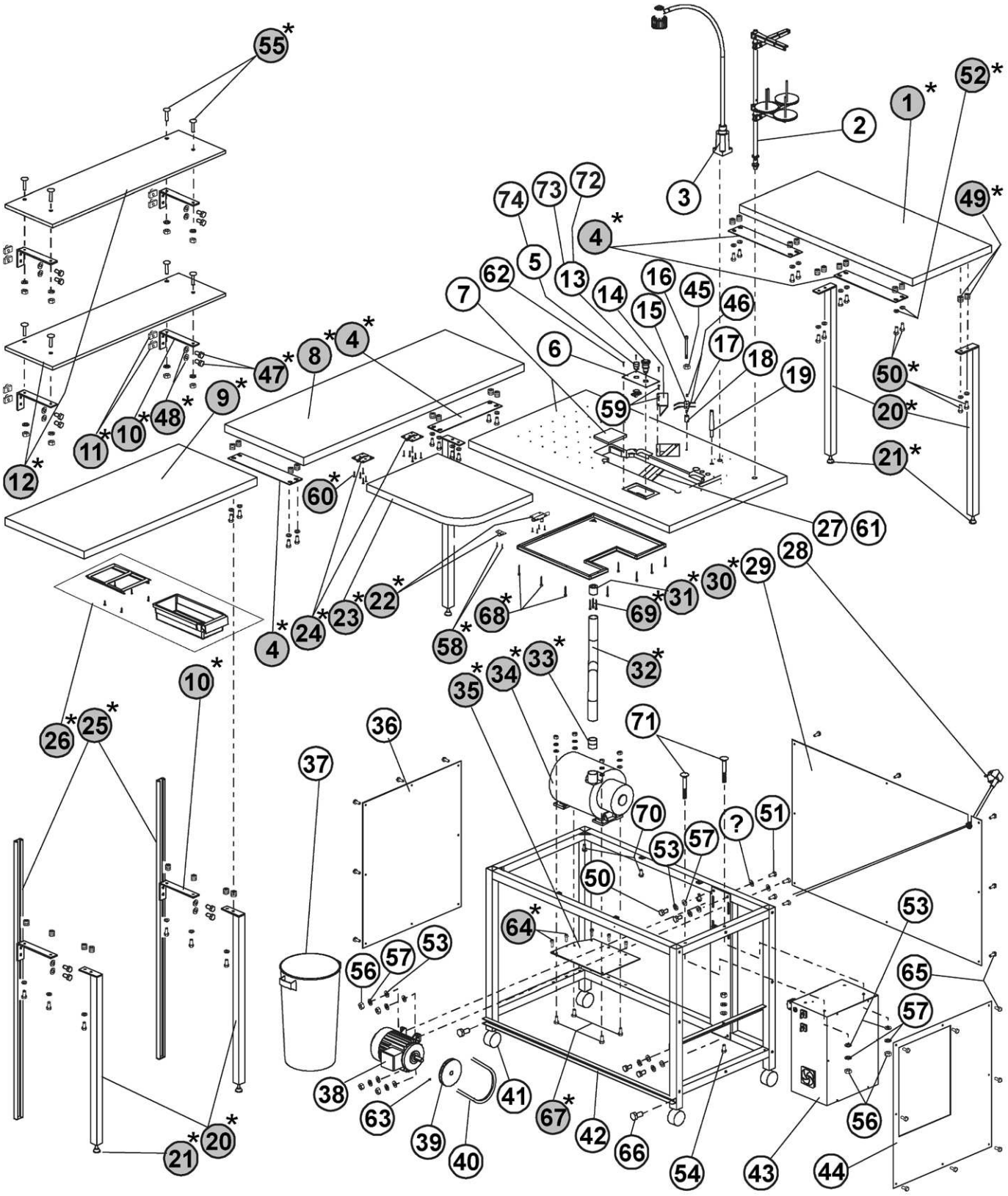

Revised 09/2005
E-mail: service@amfreece.cz; parts@amfreece.cz ; website: www.amfreece.com
Phones: +420 582 309 146 (Service), +420 582 309 286 (Spare Parts) ; Fax: +420 582 360 606

TABLE AND FRAME

DET	PART NUMBER	DESCRIPTION	QTY.
50*	08.6312.8.025	Screw M8x25	32
51	08.6312.8.025	Screw M8x25	4
52*	08.6852.8.000	Washer M8	40
53	08.6852.8.000	Washer M8	23
54	08.6000.8.018	Screw M8x18	1
55*	08.6212.8.030	Screw M8x30	8
56*	08.6702.8.000	Nut M8	10
57	08.6802.8.000	Spring Washer M8	25
58*	08.6646.3.016	Screw 3,5-16	6
59	08.6646.3.016	Screw 3,5-16	2
60*	08.6646.4.030	Screw 4-30	12
61	08.6632.3.016	Screw 3,5-16	3
62	08.6632.2.016	Screw 2-16	4
63	08.6400.6.008	Screw M4x8	1
64*	08.6200.5.016	Screw 5x16	5
65	08.6200.5.016	Screw 5x16	24
66	08.6000.0.025	Screw M10x25	4
67*	08.6200.6.025	Screw M6x25	4
68*	08.6630.5.020	Screw 5-20	16
69*	08.6000.3.010	Screw M3x10	3
70	08.6630.5.020	Screw 5-20	6
71	08.6532.8.055	Screw M8x55	2
72	12.0010.4.098	Clip	1
73	12.0010.4.102	Contact block NC	1
74	12.0010.4.098	Block assembly	1

* Modification —84-55 UJ

E-mail: service@amfreece.cz; parts@amfreece.cz ; website: www.amfreece.com
Phones: +420 582 309 146 (Service), +420 582 309 286 (Spare Parts) ; Fax: +420 582 360 606

ELECTRICAL BOX

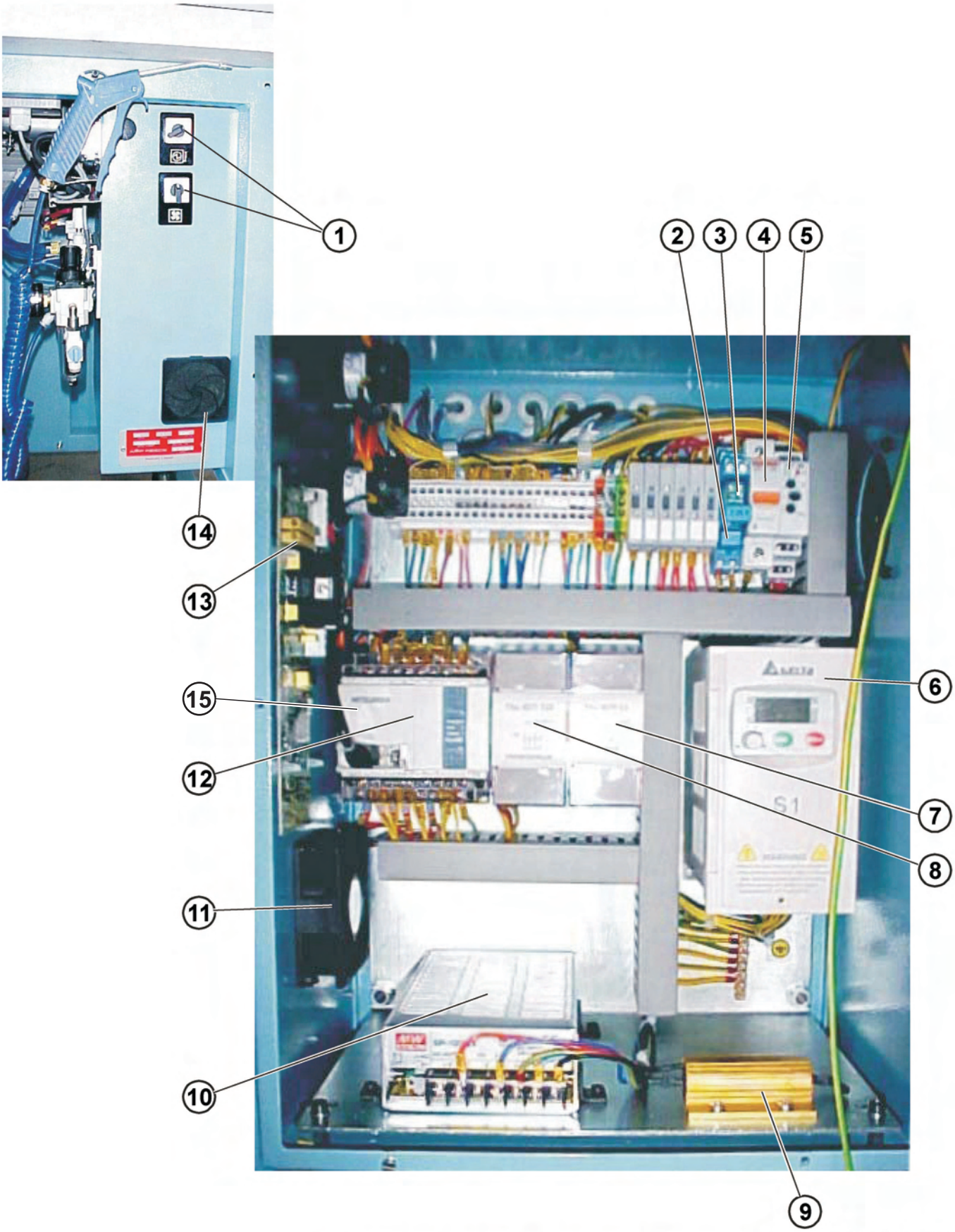

E-mail: service@amfreece.cz; parts@amfreece.cz ; website: www.amfreece.com
Phones: +420 582 309 146 (Service), +420 582 309 286 (Spare Parts) ; Fax: +420 582 360 606

ELECTRICAL BOX

DET	PART NUMBER	DESCRIPTION	QTY.
01	12.0008.4.835	Switch ON — OFF	2
02	12.0008.4.720	Reley DPDT 24V DC	1
03	12.0008.4.721	Holder Relay	1
04	12.0008.4.484	Circuit Bracker 1P-10A	1
05	12.0008.4.690	Monitoring Overvoltage / Undevoltage Relay HRN-3 (VC1)	1
06	84.8001.0.003	V.F. Drive (Inverter)	1
07	12.0008.4.871	PCL Extension Unit	1
08	12.0008.4.748	PCL Extension Unit	1
09	04.9084.0.713	Resistor	1
10	12.0008.4.735	Filter	1
11	24.6032.4.010	Fan	1
12	84.8001.0.001	PLC	1
13	04.9084.0.750	Drive Card	1
14	12.0008.4.762	Fan Cover With Filter	2
15	12.0010.4.100	FX1N Battery Unit	1

PANEL KIT

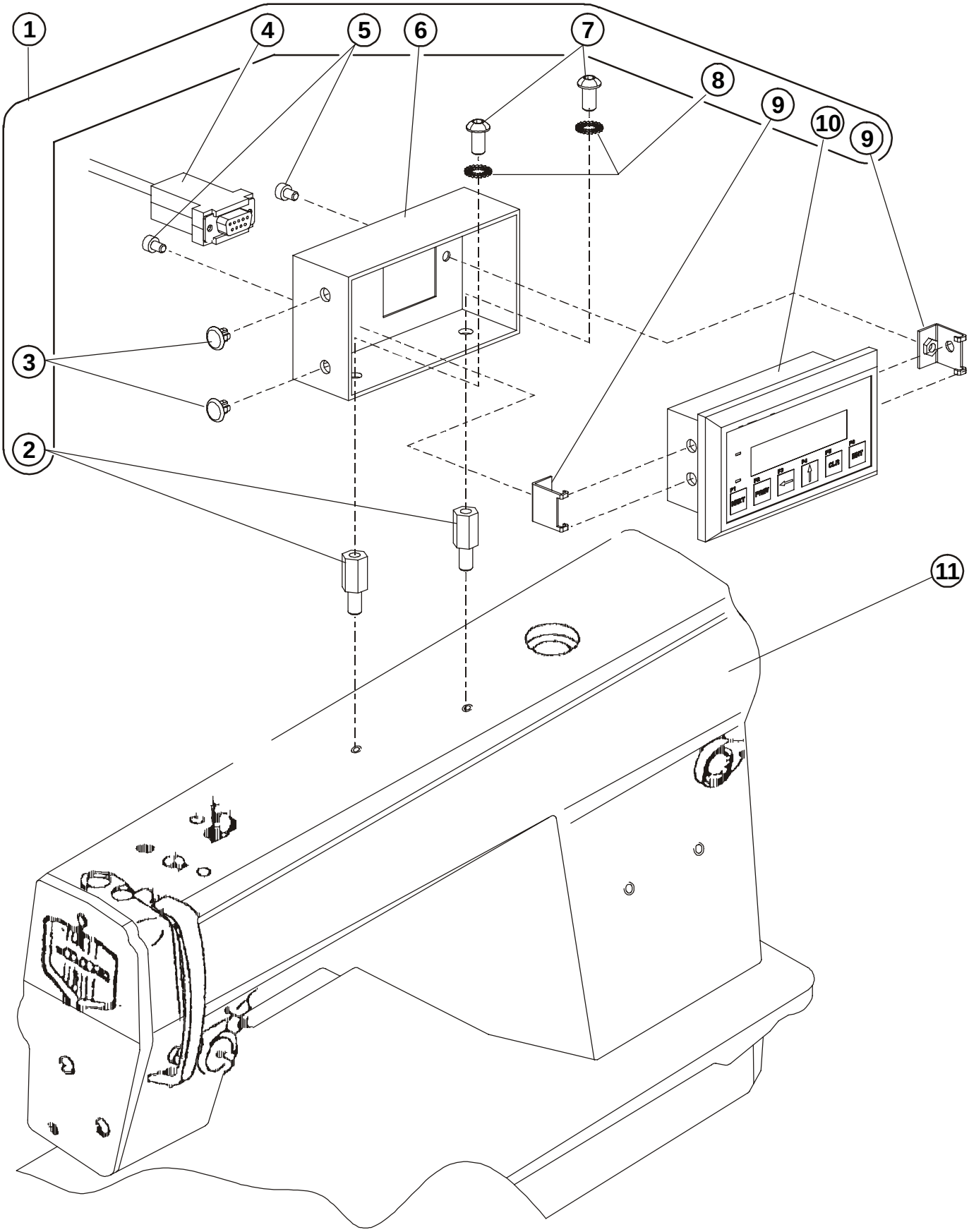

PANEL KIT

DET	PART NUMBER	DESCRIPTION	QTY.
01	84.0004.6.586	Panel Kit	1
02	12.0008.6.406	Screw	(2)
03	12.0008.4.571	Plug	(2)
04	12.0008.4.574	Cable	(1)
05	08.6000.4.006	Screw	(2)
06	24.0146.0.000	Dysplay Box	(1)
07	08.6200.6.012	Screw	(2)
08	08.6832.6.000	Serradet Washer	(2)
09	24.0147.0.000	Panel Holder	(1)
10	84.8001.0.002	Display	(1)
11	84.0005.9.022	Juki Head C/W Knife	1

E-mail: service@amfreece.cz; parts@amfreece.cz ; website: www.amfreece.com
Phones: +420 582 309 146 (Service), +420 582 309 286 (Spare Parts) ; Fax: +420 582 360 606

PNEUMATIC PART

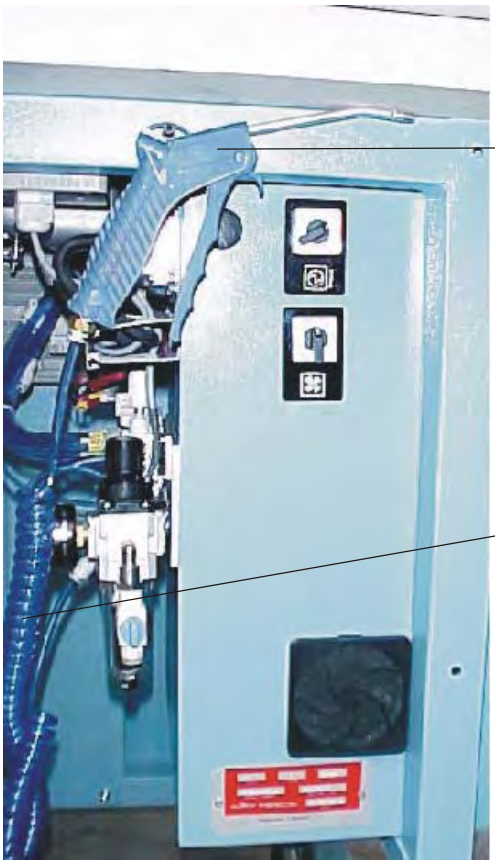

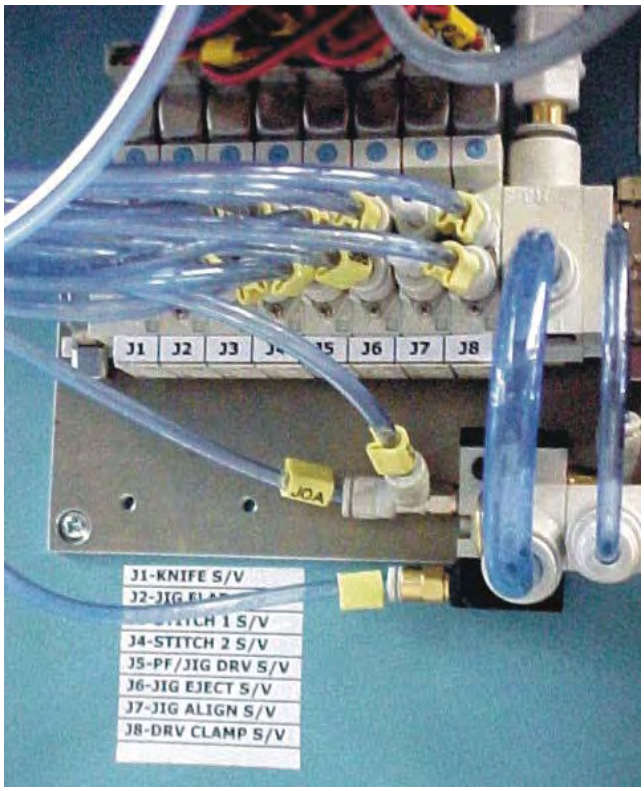

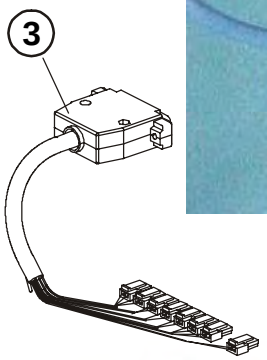

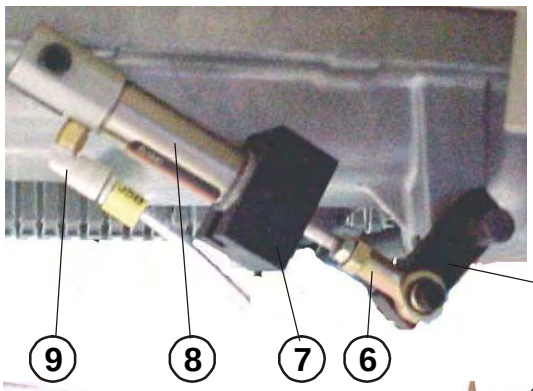

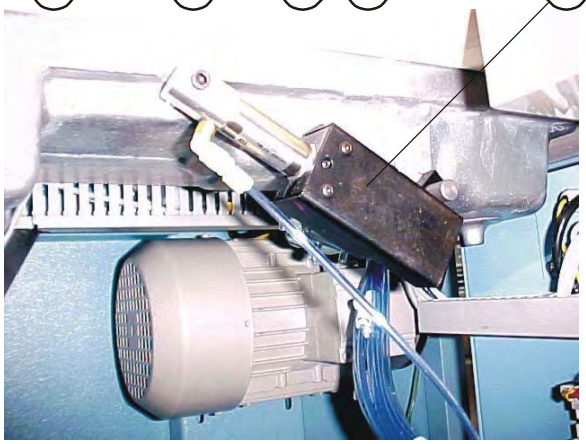

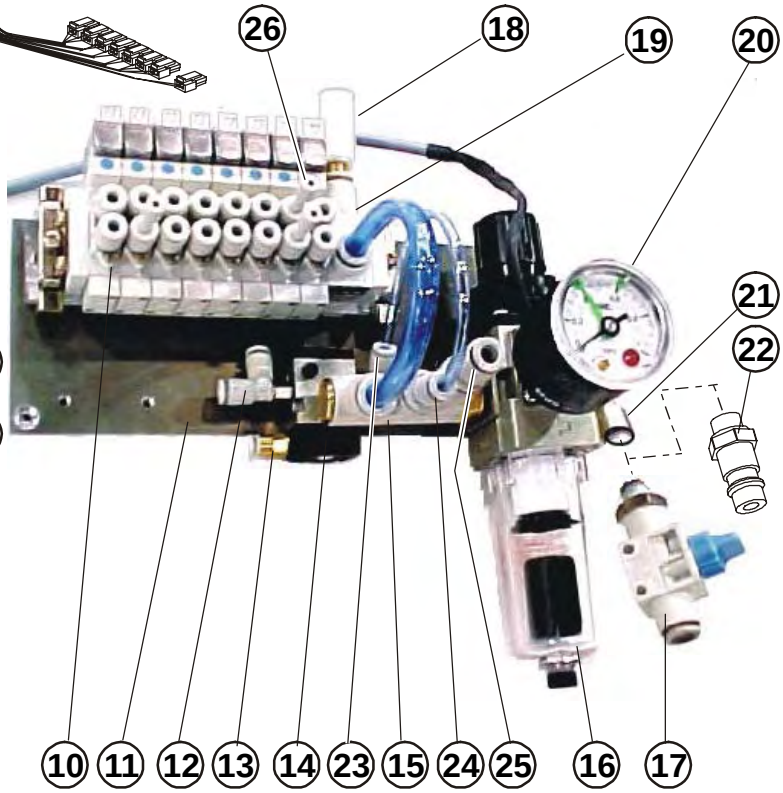

PNEUMATIC PART

DET	PART NUMBER	DESCRIPTION	QTY.
01	84.0004.6.910	Blow Gun	1
02	12.0008.3.694	Spiral Tube	1
03	04.9084.0.704	Cable	1
04	84.0004.7.115	Presser Foot Lever	1
05	84.0004.7.149	Foot Cylinder Guard	1
06	12.0008.3.701	Cylinder Rod End Bearing	1
07	84.0004.7.148	Foot Cylinder Guard Block	1
08	12.0008.3.652	Presser Foot Cylinder	1
09	12.0008.4.411	Connector	1
10	12.0008.3.482	Pneumatic Valve	8
11	04.9084.0.652	Connectors Plate	1
12	12.0008.3.638	Connector	1
13	12.0008.3.411	Connector	1
14	12.0008.3.651	Pneumatic Valve 3/2	1
15	12.0008.3.715	Connector	1
16	12.0008.3.417	Regulator	1
17	12.0008.3.463	Handvalve	1
18	12.0008.3.484	Silencer	1
19	12.0008.3.479	Air Supply Block Assembly	1
20	12.0008.3.418	Pressure Gauge	1
21	12.0008.3.696	Connector	1
22	12.0008.3.420	Connector	1
23	12.0008.3.411	Connector	1
24	12.0008.3.716	Connector	1
25	12.0008.3.717	Connector	1
26	12.0008.3.426	Plug	2

E-mail: service@amfreece.cz; parts@amfreece.cz ; website: www.amfreece.com
Phones: +420 582 309 146 (Service), +420 582 309 286 (Spare Parts) ; Fax: +420 582 360 606

ACCESSORIES

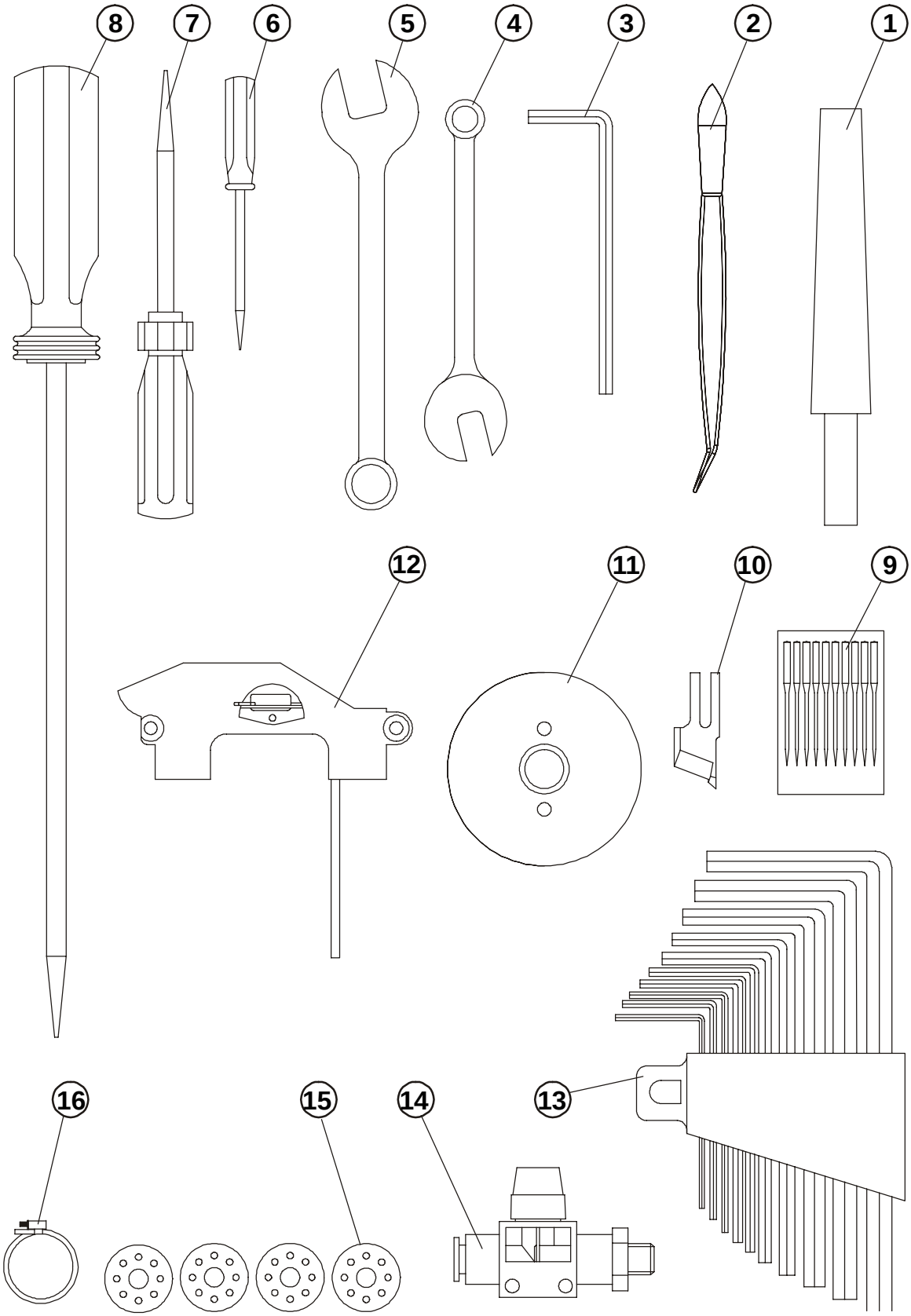

ACCESSORIES

DET	PART NUMBER	DESCRIPTION	QTY.
01	84.0002.0.125	Autojig Wooden Peg	1
02	12.0008.6.215	Tweezers	1
03	84.0010.9.830	Allen Key 7/64	1
04	84.0003.0.370	Combonation Spanne 6mm	1
05	84.0003.0.380	Combonation Spanne 8mm	1
06	—	Screw Driver	1
07	—	Screw Driver	1
08	—	Screw Driver	1
09	84.0003.0.220	Needle	10
10	84.0005.9.173	Knife 16 mm	1
11	84.0002.9.010	Drive Wheel	1
12	84.0005.9.365	Throat Plate 3/16	1
13	84.0003.0.390	Metric Allen Key	1
14	84.0005.9.196	Small Spool	4
15	12.0008.3.632	Handvalve	1
16	12.0008.3.251	Air Tubing Clamp	1

JUKI®

High Speed 1-Needle Lockstitch Industrial Sewing Machine with Automatic Thread Trimmer with Vertical Edge Trimmer

高速一本針本縫メス付自動糸切り装置付ミシン

DLM-5400N-7

PARTS LIST

HOW TO MAKE USE OF THIS PARTS LIST

1. As to "#01" and "#02" refer to the "Note" given at the bottom of the respective pages.
2. Codes on the "Qty" column
   - Each numeral indicates the number of parts required.
   - "0.1" and "2.5" indicate the length (in meters) of the respective parts.
3. Parentheses mean that the corresponding part is a subpart that constructs an assembly part.
4. Dotted lines on the Figures indicate assembly parts.

パーツリストご利用に際して

1. リストページの#01、#02 等の印は、ページ下の"注記"の説明をご参照下さい。
2. 数量欄の数字は、個数を表し、0.1、2.5等の数値は、長さ（単位メートル）を表します。
3. 数量欄の（　）は、組部品を構成している子部品であることを意味します。
4. イラストページの－－－－－枠は、組構成であることを意味します。

JUKI CORPORATION
INTERNATIONAL SALES DIVISION
8-2-1, KOKURYO-CHO,
CHOFU-SHI, TOKYO 182, JAPAN
PHONE : 03(3430)4001 ～ 5
FAX : 03(3430)4909 · 4914 · 4984
TELEX : J22967

29133501
No.0892-03

Revised 09 /2005

E-mail: service@amfreece.cz; parts@amfreece.cz ; website: www.amfreece.com
Phones: +420 582 309 146 (Service), +420 582 309 286 (Spare Parts) ; Fax: +420 582 360 606

NEEDLE BAR, UPRIGHT SHAFT & HOOK DRIVING SHAFT COMPONENTS

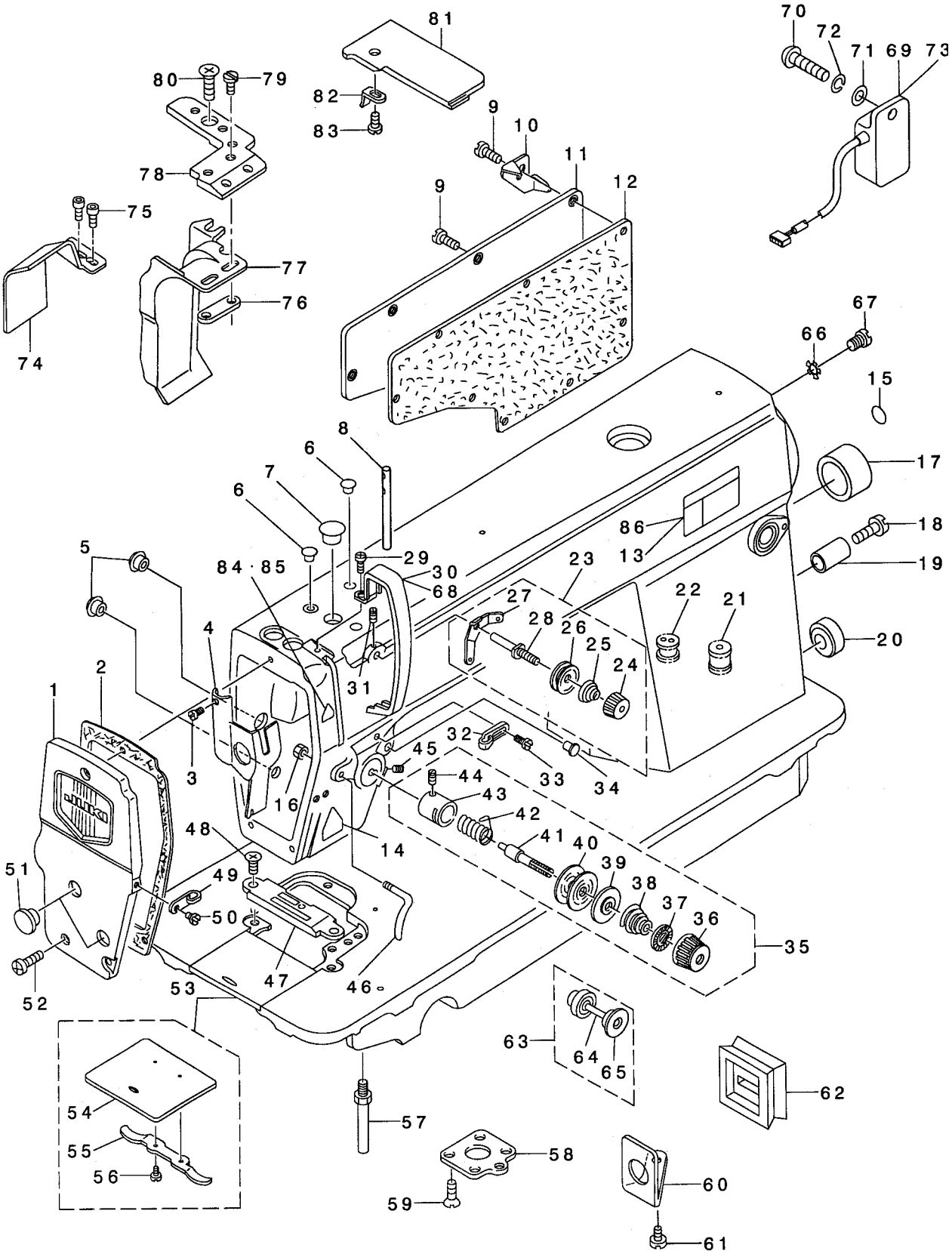

E-mail: service@amfreece.cz; parts@amfreece.cz ; website: www.amfreece.com
Phones: +420 582 309 146 (Service), +420 582 309 286 (Spare Parts) ; Fax: +420 582 360 606

NEEDLEBAR, UPRIGHT SHAFT & HOOK DRIVING SHAFT COMPONENTS

DET	PART NUMBER	DESCRIPTION	NOTE	QTY.
01	113-25750	FACE PLATE ASM.		1
02	113-00506	FACE PLATE GASKET		1
03	SS-6080410-SP	SCREW 1/8-44 L=4		1
04	110-00858	ARM OIL SHIELD ASM.		1
05	TA-1250504-R0	RUBBER PLUG		2
06	TA-0850604-R0	RUBBER PLUG		2
07	TA-1250705-R0	RUBBER PLUG		1
08	B1114-012-000	THREAD GUIDE PIN		1
09	SS-4120915-SP	SCREW 3/16-28 L=9		8
10	111-02605	CORD HOLDER	#01	1
11	110-70901	SIDE PLATE		1
12	110-00619	GASKET		1
13	CM-3002001-A1	SAFETY LABEL.,3 (SMALL).	#04	1
14	CM-3002000-C1	CAUTION LABEL	#07	1
15	100-04109	GROUND MARK		1
16	NS-6090310-SP	NUT 9/64-40		1
17	TA-2000502-R0	RUBBER PLUG		1
18	SS-6121840-SP	SCREW 3/16-28 L=18	#02	1
19	111-00500	REVERSE FEED LEVER STOPPER	#02	1
20	TA-2101002-R0	RUBBER PLUG		1
21	110-30202	RUBBER BUSHING	#03	1
22	111-00104	MAGNET CORD RUBBER	#02	1
23	110-72451	THREAD TENSION ASM.		1
24	110-45309	THREAD TENSION NUT		(1)
25	110-45101	THREAD TENSION SPRING		(1)
26	B3214-047-000	BOBBIN WINDER TENSION DISC		(2)
27	110-45200	THREAD TENSION GUIDE		(1)
28	110-45002	FIRST TENSION POST		(1)
29	SS-4120615-SP	SCREW 3/16-28 L=6		1
30	114-00405	THREAD TAKE-UP LEVER COVER		1
31	SS-4120615-SP	SCREW 3/16-28 L=6		1
32	110-18504	ARM THREAD GUIDE A		1
33	110-01500	SCREW		1
34	TA-0850604-R0	RUBBER PLUG		1
35	110-72352	THREAD TENSION ASM.		1
36	110-72204	TENSION NUT		(1)
37	B3120-125-000	ROTATING STOPPER		(1)
38	B3129-012-A00	TENSION SPRING		(1)
39	B3132-552-000	THREAD TENSION DISK PRESSER		(1)
40	B3126-012-000	THREAD TENSION DISK		(2)
41	B3115-552-000	TENSION POST		(1)
42	B3128-012-000	TAKE-UP SPRING		(1)
43	B3111-126-000	TENSION POST SOCKET		(1)

NOTE: #01.....FOR DLM-5400N,7-0B,-W0,-WB
#02.....FOR DLM-5400N-7-0B,-WB
#03.....FOR DLM-5400N-7-00,-W0
#04.....EXCEPT JE,DOMESTIC USE
#05.....FOR JE
#06.....FOR JA
#07.....FOR DOMESTIC USE

E-mail: service@amfreece.cz; parts@amfreece.cz ; website: www.amfreece.com
Phones: +420 582 309 146 (Service), +420 582 309 286 (Spare Parts) ; Fax: +420 582 360 606

NEEDLE BAR, UPRIGHT SHAFT & HOOK DRIVING SHAFT COMPONENTS

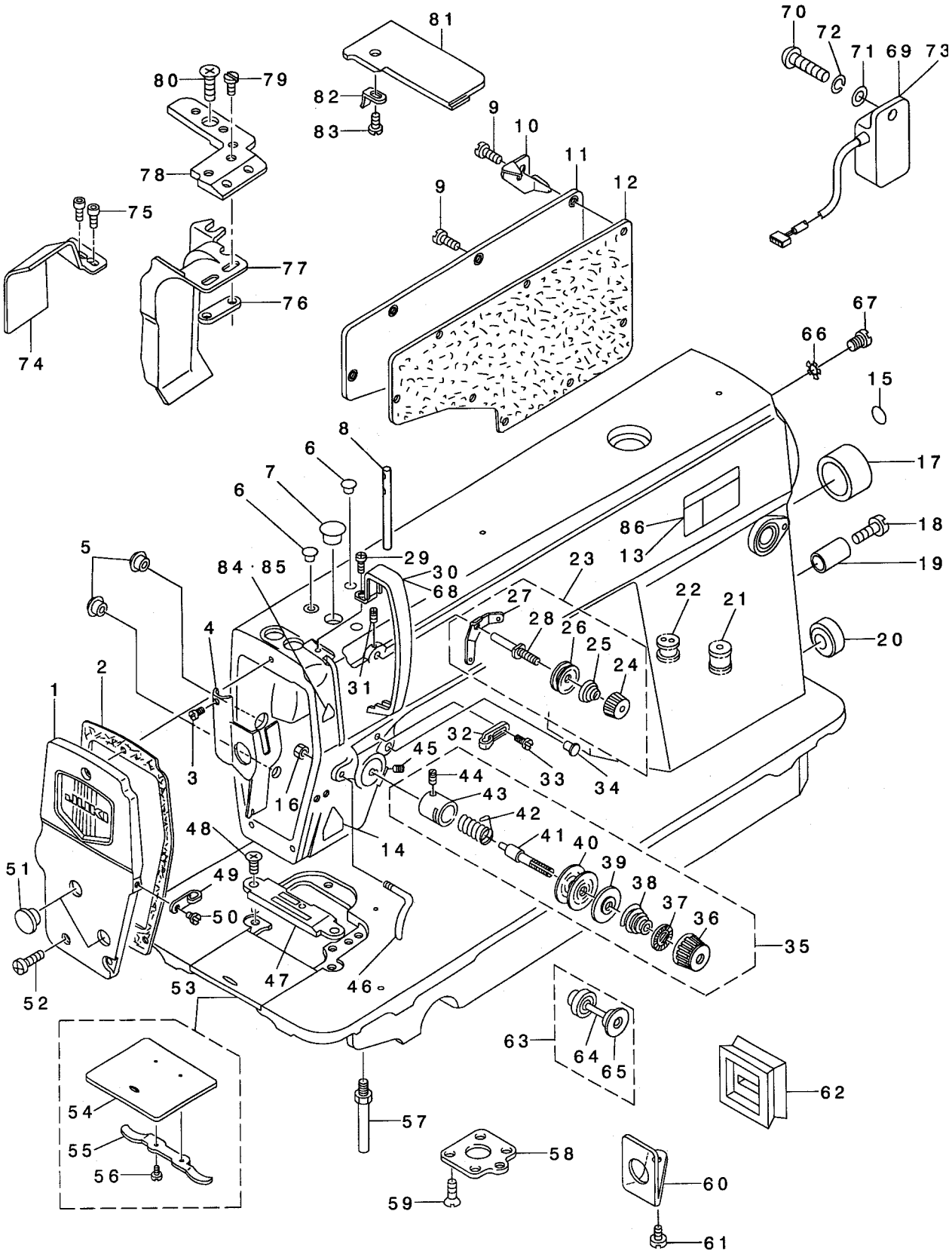

E-mail: service@amfreece.cz; parts@amfreece.cz ; website: www.amfreece.com
Phones: +420 582 309 146 (Service), +420 582 309 286 (Spare Parts) ; Fax: +420 582 360 606

NEEDLE BAR, UPRIGHT SHAFT & HOOK DRIVING SHAFT COMPONENTS

DET	PART NUMBER	DESCRIPTION	NOTE	QTY.
44	SS-8090670-SP	SCREW 9/64-40 L= 5.5		(1)
45	SS-8150710-SP	SCREW 15/64-28 L=7		1
46	113-05513	ARM THREAD GUIDE, C		1
47	B1190-522-S00	GAUGE PLATE 1/8 S		1
48	SS-2110915-SP	SCREW 11/64-40 L=8.5		2
49	110-18603	ARM THREAD GUIDE B		1
50	SS-6110610-TP	SCREW 11/64-40 L=6		1
51	TA-1250406-R0	RUBBER PLUG D=12.5 L=4		2
52	SS-4121015-SP	SCREW 3/16-28 L=10		3
53	110-01658	BED SLIDE ASM.		1
54	B1110-012-000	SLIDE PLATE		(1)
55	110-01609	BED SLIDE SPRING		(1)
56	SS-6060210-SP	SCREW 3/32-56 L= 1.9		(1)
57	110-01104	BED SCREW STUD		4
58	113-00407	PRESSER BAR SUPPORT		1
59	SS-1120710-SP	SCREW 3/16-28 L=6.5		4
60	113-45709	OIL SHIELD		1
61	SS-6110610-TP	SCREW 11/64-40 L=6		1
62	113-45600	OIL RUBBER		1
63	B3133-415-0A0	TENSION RELEASE PIN CAP ASM.		1
64	B3118-415-000	TENSION RELEASE PIN		(1)
65	B3136-415-000	CAP RING		(1)
66	WT-0530002-KS	TOOTHED WASHER D=5.3		1
67	SS-4120615-SP	SCREW 3/16-28 L=6		1
68	180-77503	THREAD TAKE-UP LEVER COVER		1
69	M6001-350-AAA	RESISTANCE PACK AA ASM.		1
70	SS-4121215-SP	SCREW 3/16-28 L=12		1
71	WP-0501016-SD	WASHER 5X10.5X1		1
72	WS-0510002-KP	SPRING WASHER 5.1X9.2X1.3		1
73	M6001-350-AAF	RESISTANCE PACK AF ASM.		1
74	113-46400	WASTE MATERIAL GUIDE		1
75	113-45808	SCREW		2
76	B1193-530-000	WASTE MATERIAL GUARD PLATE		1
77	113-46905	WASTE MATERIAL GUARD, E		1
78	113-46004	NEEDLE PLATE, A		1
79	SS-4080310-SP	SCREW 1/8-44 L=3.4		2
80	SS-2110915-SP	SCREW 11/64-40 L=8.5		2
81	B1115-530-00F	THROAT PLATE COVER F		1
82	B1115-522-000-A	OPEN COVER SPRING		1
83	SS-4080310-SP	SCREW 1/8-44 L=3.4		1
84	CM-3002000-01	ATTENTION SEAL	#05	1
85	CM-3002000-B1	LABEL(16)	#07	1
86	CM-3002001-01	SAFETY LABEL, 1(SMALL).	#07	1

NOTE: #01.....FOR DLM-5400N,7-0B,-W0,-WB
#02.....FOR DLM-5400N-7-0B,-WB
#03.....FOR DLM-5400N-7-00,-W0
#04.....EXCEPT JE,DOMESTIC USE
#05.....FOR JE
#06.....FOR JA
#07.....FOR DOMESTIC USE

E-mail: service@amfreece.cz; parts@amfreece.cz ; website: www.amfreece.com
Phones: +420 582 309 146 (Service), +420 582 309 286 (Spare Parts) ; Fax: +420 582 360 606

MAIN SHAFT & THREAD TAKE-UP LEVER COMPONENTS

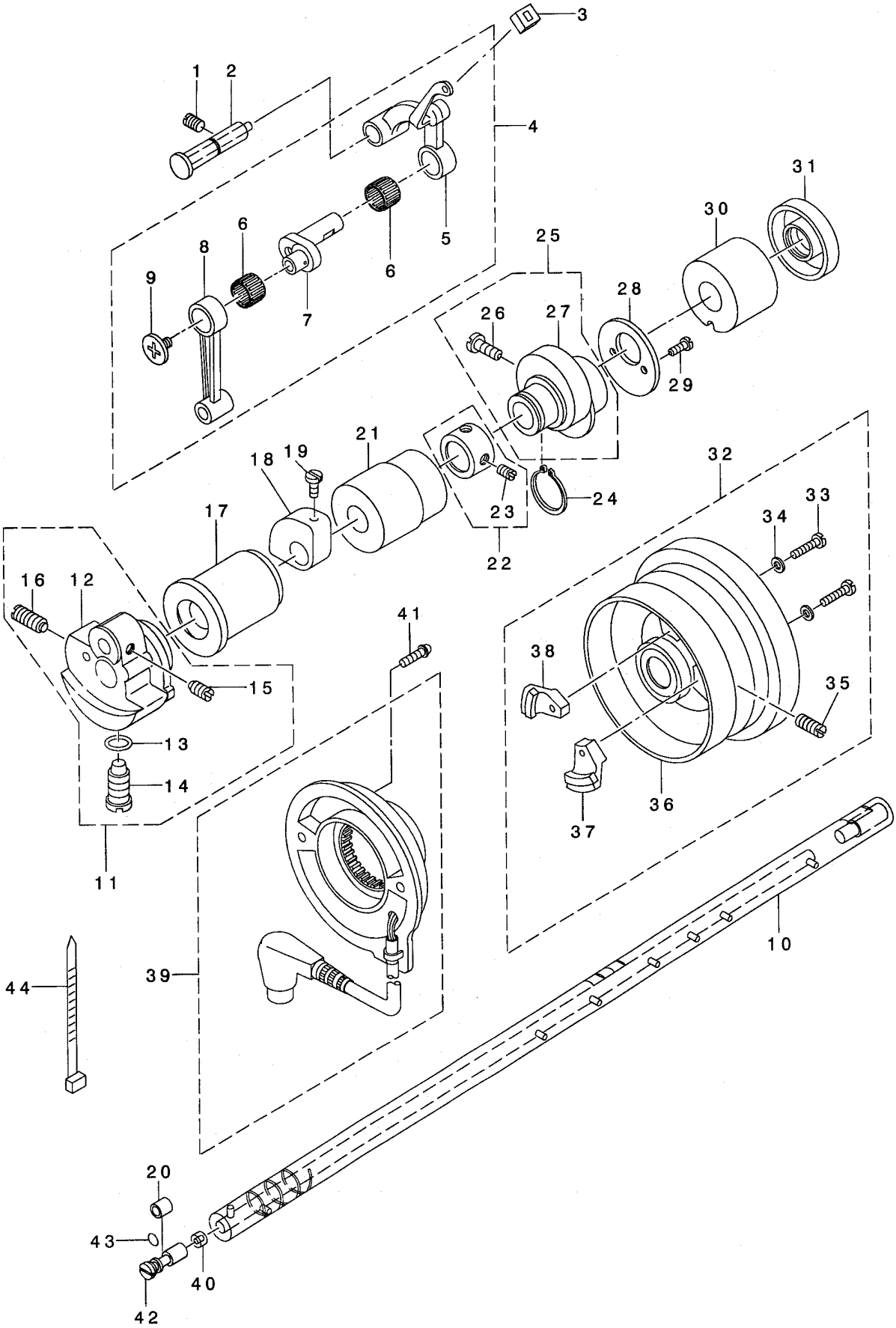

E-mail: service@amfreece.cz; parts@amfreece.cz ; website: www.amfreece.com
Phones: +420 582 309 146 (Service), +420 582 309 286 (Spare Parts) ; Fax: +420 582 360 606

MAIN SHAFT & THREAD TAKE-UP LEVER COMPONENTS

DET	PART NUMBER	DESCRIPTION	NOTE	QTY.
01	SS-8151150-SP	SCREW 15/64-28 L=10.5		1
02	110-17357	THREAD TAKE-UP CRANK SHAFT		1
03	B1909-505-000	RUBBER		1
04	110-39070	THREAD TAKE-UP LEVER ASM.		1
05	110-39062	THREAD TAKE-UP LEVER ASM.		(1)
06	B1905-541-B00	NEEDLE BEARING	#01	(2)
07	110-05204	NEEDLE BAR CRANK		(1)
08	B1408-552-000	NEEDLE BAR CRANK ROD		(1)
09	B1903-552-000	LEFT SCREW		(1)
10	113-49008	MAIN SHAFT		1
11	113-49370	COUNTERWEIGHT ASM. M		1
12	113-49214	COUNTERWEIGHT		(1)
13	RO-0442401-00	RUBBER RING		(1)
14	SS-7681650-TP	SCREW 9/32-28 L=16		(1)
15	SS-8660610-TP	SCREW 1/4-40 L=6		(2)
16	SS-8681650-TP	SCREW 9/32-28 L=16		(1)
17	113-49107	BUSHING, FRONT		1
18	113-49404	BALANCER		1
19	SS-7150940-SP	SCREW 15/64-28 L=9		2
20	B1215-552-000	OIL ADJUSTING COLLAR		1
21	110-02300	BUSHING, INTERMEDIATE		1
22	CS-147121A-SH	THRUST COLLAR ASM.D=14.72 W=12		1
23	SS-8660610-TP	SCREW 1/4-40 L=6		(2)
24	RC-1850001-KP	SNAP RING 18.5		1
25	110-08059	FEED DRIVE ECCENTRIC CAM ASM.		1
26	SS-6661110-SP	SCREW 1/4-40 L=11		(2)
27	110-08000	FEED DRIVE ECCENTRIC CAM		(1)
28	110-08109	THRUST COLLAR		1
29	SS-6090650-SP	SCREW 9/64-40 L=6		2
30	110-02409	MAIN SHAFT BUSHING, REAR		1
31	110-02508	OIL SEAL		1
32	110-71461	HAND WHEEL ASM.		1
33	SS-6111210-SP	SCREW 11/64-40 L=12		(2)
34	WP-0450801-SD	WASHER 4.5X10X0.8		(2)
35	SS-8151550-SP	SCREW 15/64-28 L=15		(2)
36	110-32158	HAND WHEEL ASM.		(1)
37	M4007-110-0AA	MAGNET FITTING BASE A ASM.		(1)
38	M4007-110-0AB	MAGNET FITTING BASE B ASM.		(1)
39	110-32562	DYNAMO STATOR		1
40	110-02904	ROLLER FELT		1
41	SL-4051001-MZ	SCREW M5 L=9.6		2
42	110-03001	OIL AMOUNT ADJUSTING PIN		1
43	RO-0291801-00	RUBBER RING		1
44	HX-0004300-00	CLIP		1

NOTE: #01.....SELECTIVE PART (A ~ D)

E-mail: service@amfreece.cz; parts@amfreece.cz ; website: www.amfreece.com
Phones: +420 582 309 146 (Service), +420 582 309 286 (Spare Parts) ; Fax: +420 582 360 606

NEEDLE BAR, UPRIGHT SHAFT & HOOK DRIVING SHAFT COMPONENTS

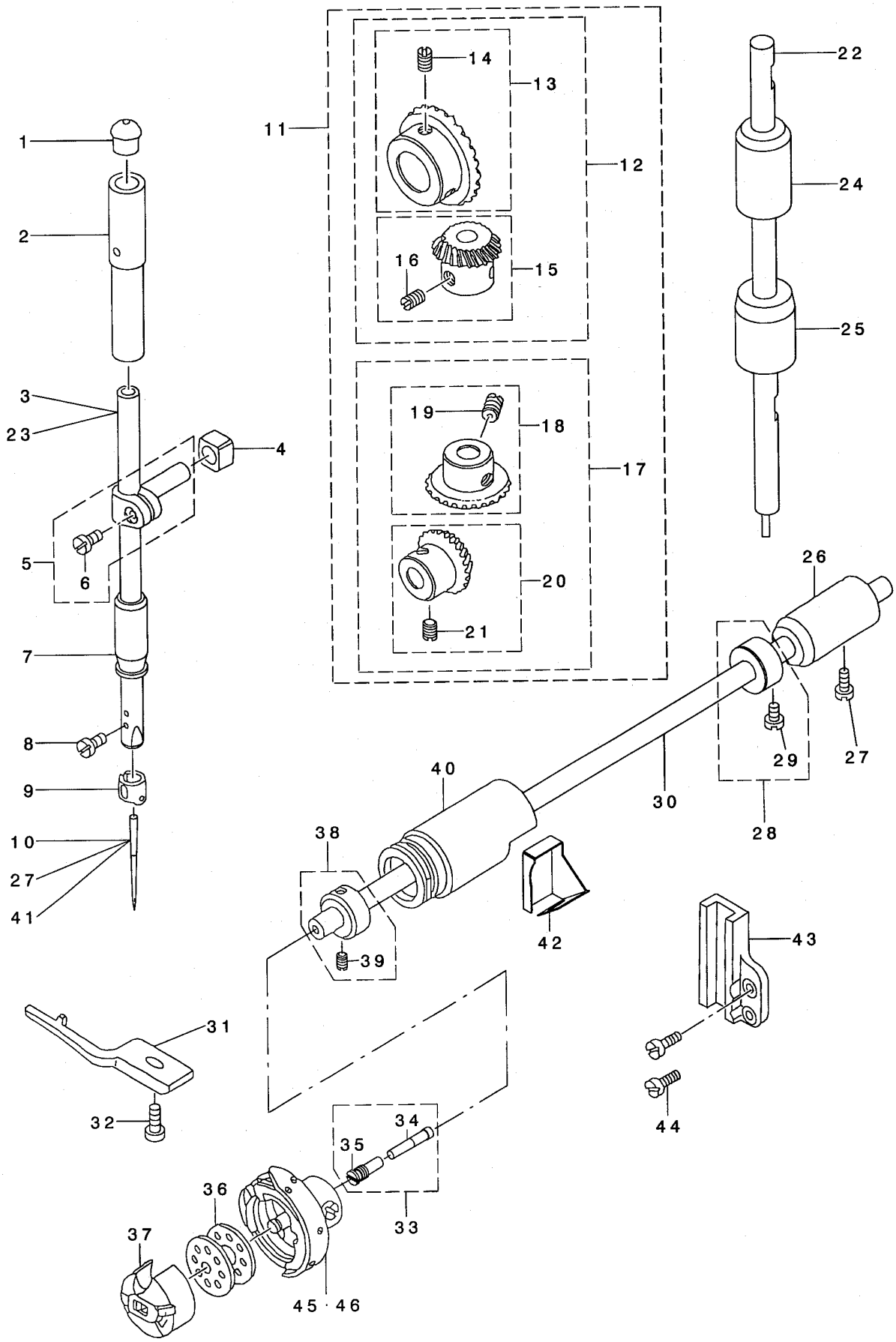

E-mail: service@amfreece.cz; parts@amfreece.cz ; website: www.amfreece.com
Phones: +420 582 309 146 (Service), +420 582 309 286 (Spare Parts) ; Fax: +420 582 360 606

NEEDLE BAR, UPRIGHT SHAFT & HOOK DRIVING SHAFT COMPONENTS

DET	PART NUMBER	DESCRIPTION	NOTE	QTY.
01	B1405-012-000	CAP		1
02	B1402-552-000-A	NEEDLE BAR BUSHING, UPPER		1
03	113-49701	NEEDLE BAR, A		1
04	B1414-555-000	SLIDE BLOCK		1
05	B1411-552-0A0	NEEDLE ROD HOLDER ASM.		1
06	SS-6090670-TP	SCREW 9/64-40 L=6		(1)
07	B1403-155-000	NEEDLE BAR BUSHING, LOWER		1
08	SS-7080510-TP	SCREW 1/8-44 L=4.5		1
09	B1418-530-000	NEEDLE BAR THREAD GUIDE		1
10	MDB-100B1400	NEEDLE DBX1 #14		1
11	B1306-155-0C0	GEAR & PINION ASM.		1
12	B1306-155-0B0	GEAR & PINION ASM., UPPER		(1)
13	B1305-012-0A0	GEAR ASM.		(1)
14	SS-8660810-TP	SCREW 1/4-40 L=8		(2)
15	B1306-155-0A0	PINION ASM.		(1)
16	SS-8660810-TP	SCREW 1/4-40 L=8		(2)
17	B1307-155-0B0	GEAR & PINION ASM., LOWER		(1)
18	B1307-155-0A0	GEAR ASM. LARGE		(1)
19	SS-8660810-TP	SCREW 1/4-40 L=8		(2)
20	B1308-155-0A0	PINION ASM.		(1)
21	SS-8660810-TP	SCREW 1/4-40 L=8		(2)
22	110-04009	UPRIGHT SHAFT		1
23	113-49800	NEEDLE BAR, B	#02	1
24	110-04306	BUSHING B, UPPER		1
25	110-04207	UPRIGHT SHAFT BUSHING, LOWER		1
26	110-15807	BUSHING, REAR		1
27	MC-2005009-00	NEEDLE 134 90	#03	1
28	CS-079101A-SH	THRUST COLLAR ASM. D=7.94 W=10		1
29	SS-6110420-TP	SCREW 11/64-40 L=4.8		(2)
30	110-15005	HOOK DRIVING SHAFT		1
31	110-38809	BOBBIN CASE HOLDER		1
32	SS-6111010-SP	SCREW 11/64-40 L= 9.5		1
33	110-15955	OIL SEAL SCREW ASM.		1
34	110-15906	OIL WICK		(1)
35	B1808-552-000	OIL SEAL SCREW		(1)
36	B9117-012-000	BOBBIN		1
37	110-38759	BOBBIN CASE ASM.		1
38	CS-079073A-SH	THRUST COLLAR ASM.		1
39	SS-8110410-TP	SCREW 11/64-40 L= 3.5		(2)
40	113-51004	BUSHING, FRONT		1
41	MDP-500B1400	NEEDLE DPX5 #14	#01	1
42	110-38908	OIL SHIELD		1
43	113-49909	ROLLER GUIDE BRACKET		1
44	SS-4120915-SP	SCREW 3/16-28 L=9		2
45	111-41355	HOOK ASM.		1
46	110-38650	HOOK ASM.	#04	1
47	SS-4120915-SP	SCREW 3/16-28 L=9		1

NOTE: #01.....FOR JO
#02.....FOR JE, JO
#03.....FOR JE
#04.....FOR DOMESTIC USE, JH

E-mail: service@amfreece.cz; parts@amfreece.cz ; website: www.amfreece.com
Phones: +420 582 309 146 (Service), +420 582 309 286 (Spare Parts) ; Fax: +420 582 360 606

HAND LIFTER COMPONETS

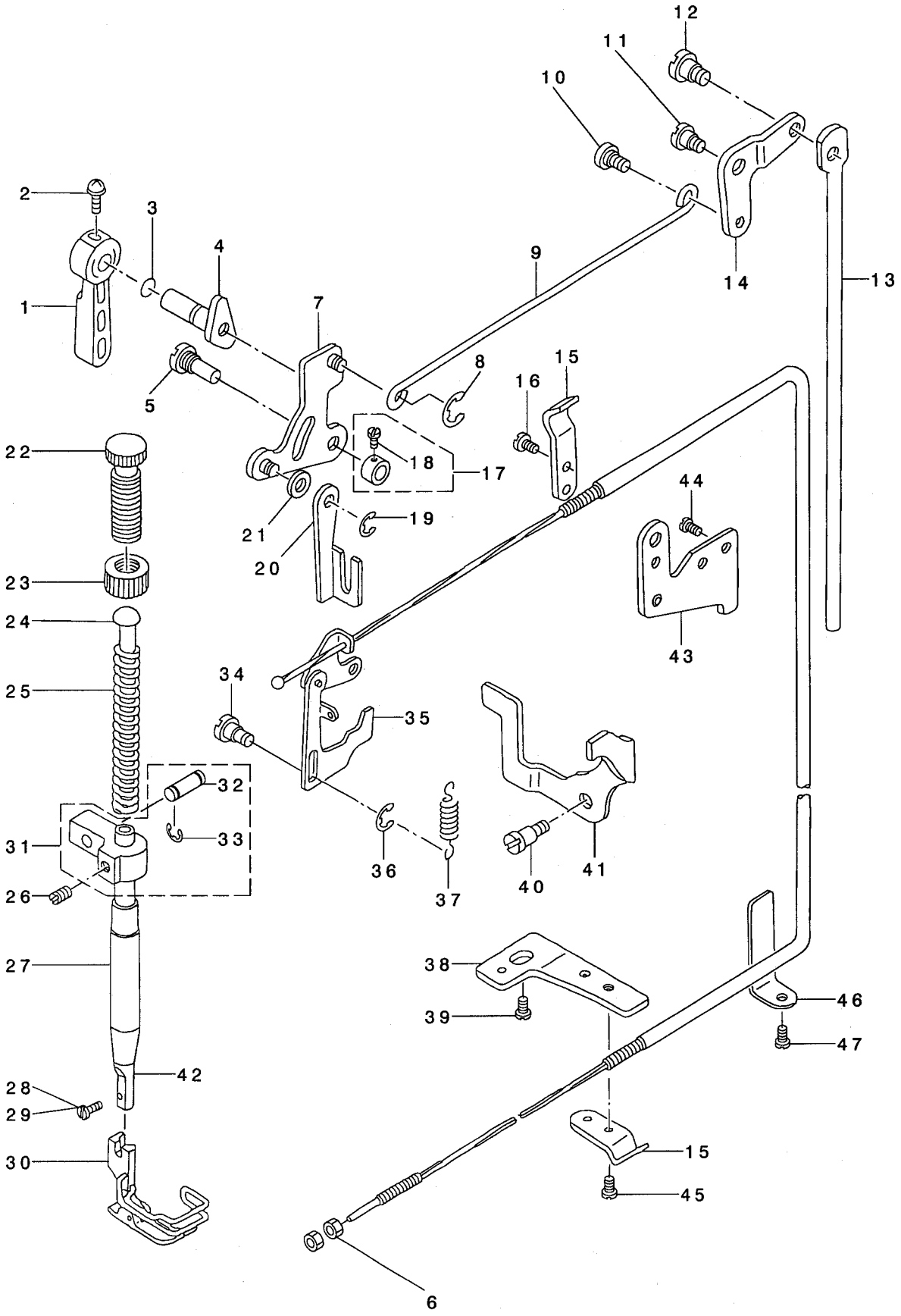

E-mail: service@amfreece.cz; parts@amfreece.cz ; website: www.amfreece.com
Phones: +420 582 309 146 (Service), +420 582 309 286 (Spare Parts) ; Fax: +420 582 360 606

HAND LIFTER COMPONETS

DET	PART NUMBER	DESCRIPTION	NOTE	QTY.
01	110-71800	HAND LIFTER		1
02	B1521-555-000	SCREW		1
03	RO-0371801-00	RUBBER RING		1
04	110-06756	HAND LIFTER CAM ASM.		1
05	113-01702	LINK SHAFT		1
06	NS-6620310-SP	NUT 3/16-32		2
07	110-06350	HAND LIFTER LINK		1
08	RE-0500000-K0	E-RING		1
09	110-06905	LIFTING LEVER CONNECTING ROD		1
10	110-07101	HINGE SCREW		1
11	SD-0720331-SP	HINGE SCREW D= 7.24 H= 3.3		1
12	SD-0600322-SD	HINGE SCREW D=6 H=3.2		1
13	112-05408	CONNECTING ROD		1
14	112-05309	LIFTING LEVER LINK		1
15	110-45408	WIRE HOLDER A		2
16	SS-7110720-SP	SCREW 11/64-40 L=7		1
17	CS-064061A-SP	THRUST COLLAR ASM.		1
18	SS-7090620-TP	SCREW 9/64-40 L=6.1		(2)
19	RE-0500000-K0	E-RING		1
20	113-01652	LIFTING LEVER ASM.		1
21	WP-0650876-SD	WASHER 6.5X13X0.8		1
22	110-71602	PRESSER SPRING REGULATOR		1
23	110-71701	NUT		1
24	B1510-227-000	PRESSER GUIDE BAR		1
25	B1505-227-000-A	PRESSER SPRING		1
26	SS-8660610-TP	SCREW 1/4-40 L=6		1
27	B1502-541-000	PRESSER BAR BUSHING, LOWER		1
28	SS-7090710-SP	SCREW 9/64-40 L= 6.8	#01	1
29	SS-6090910-SP	SCREW 9/64-40 L=9	#04	1
30	B1524-530-DB0	PRESSER FOOT ASM.	#03	1
31	113-01355	NEEDLE BAR GUIDE BRACKET ASM.		1
32	113-01405	PIN		(1)
33	RE-0300000-K0	E-RING 3		(2)
34	113-06107	TENSION RELEASE PLATE SHAFT		1
35	113-55450	TENSION RELEASE LINK ASM.		1
36	RE-0300000-K0	E-RING 3		1
37	113-05901	SPRING		1
38	110-45705	WIRE HOLDER BRACKET (LOWER)		1
39	SS-4150915-SP	SCREW 15/64-28 L=9	#02	1
40	SD-0640261-SP	HINGE SCREW D=3.65 H=2.6		1
41	113-55609	TENSION RELEASE HOLDER		1
42	B1501-530-000	PRESSER BAR		1
43	113-55203	WIRE HOLDER BRACKET, UPPER		1
44	SS-4120615-SP	SCREW 3/16-28 L=6		1
45	SS-7110410-SP	SCREW 11/64-40 L=4		1
46	110-46000	WIRE CABLE HOLDER		1
47	SS-4120615-SP	SCREW 3/16-28 L=6		1

NOTE: #01.....FOR DLM-5400N-7-00,-0B
#02.....FOR DLM-5400N-7-00,-W0
#03.....FOR EXPORT
#04.....FOR DLM-5400N-7-W0,-WB

E-mail: service@amfreece.cz; parts@amfreece.cz ; website: www.amfreece.com
Phones: +420 582 309 146 (Service), +420 582 309 286 (Spare Parts) ; Fax: +420 582 360 606

FEED MECHANISM COMPONETS

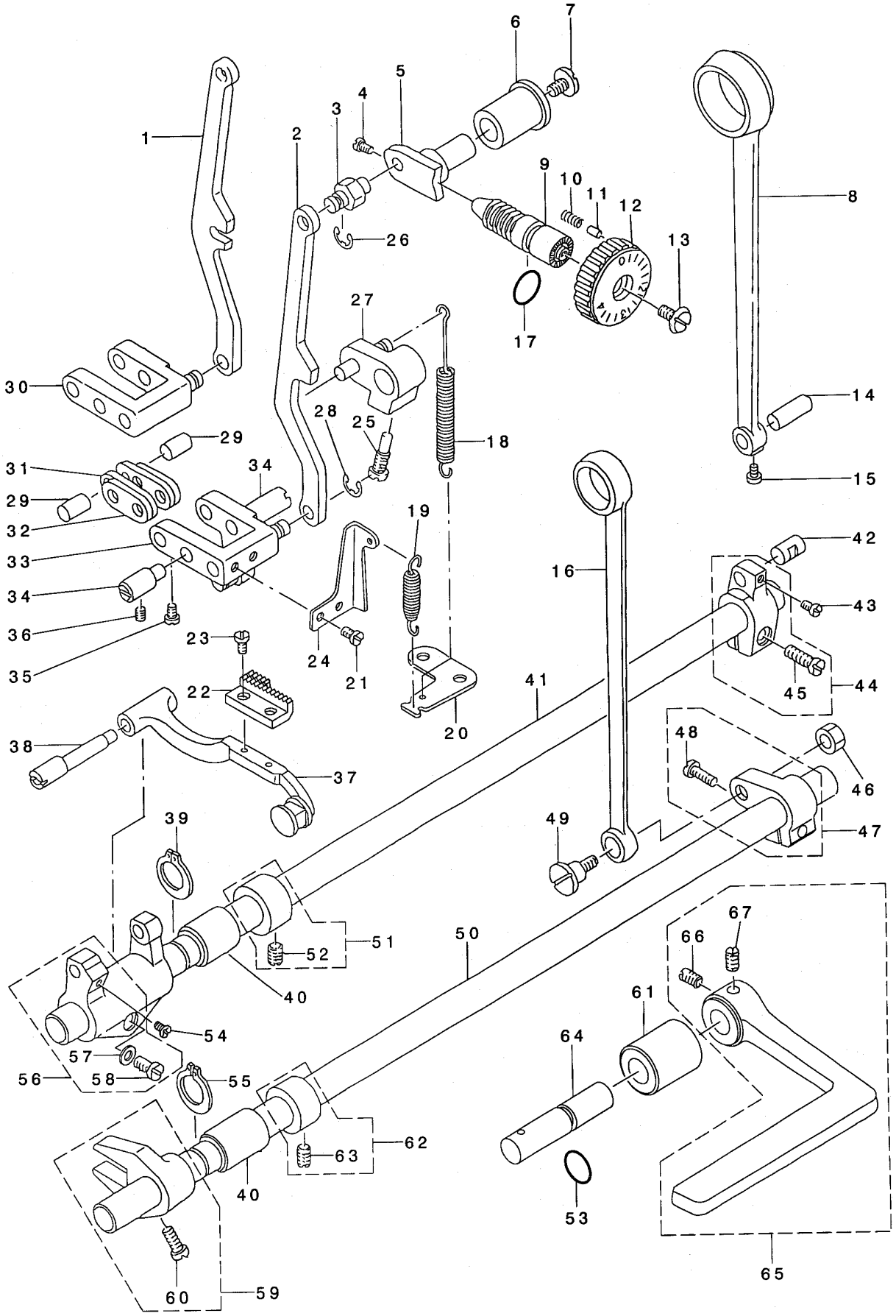

E-mail: service@amfreece.cz; parts@amfreece.cz ; website: www.amfreece.com
Phones: +420 582 309 146 (Service), +420 582 309 286 (Spare Parts) ; Fax: +420 582 360 606

FEED MECHANISM COMPONETS

DET	PART NUMBER	DESCRIPTION	NOTE	QTY.
01	110-09503	FEED REGULATOR CONNCTING ROD	#01	1
02	111-00401	FEED ADJUST ROD	#02	1
03	110-09602	FEED REGULATOR PIN		1
04	SS-7090520-TP	SCREW 9/64-40 L= 4.5		2
05	110-09701	FEED REGULATOR		1
06	110-11509	FEED REGULATOR BUSHING		1
07	SS-7120770-SH	SCREW 3/16-28 L=7		1
08	110-08208	ROCKER SHAFT CONNECTING ROD		1
09	110-09909	FEED REGULATOR SCREW		1
10	B1148-555-000	SPRING		1
11	110-52701	PIN		1
12	110-72006	FEED DIAL		1
13	SS-6121860-SP	SCREW 3/16-28 L=18		1
14	110-09206	WALKING FOOT PIN C		1
15	SS-6090620-SP	SCREW 9/64-40 L=6		1
16	110-14008	CONNECTING ROD		1
17	RO-0922702-00	RUBBER RING		1
18	110-10303	FEED REVERSE SPRING		1
19	110-37405	SPRING		1
20	110-11301	FEED SPRING HOOK		1
21	SS-7110510-SP	SCREW 11/64-40 L=5		2
22	B1613-522-N00-A	FEED DOG		1
23	SS-4080620-TP	SCREW 1/8-44 L=6		2
24	110-92301	ADJUSTING LINK SPRING GUIDE		1
25	110-10410	FEED REVERSE ARM SCREW		1
26	RE-0500000-K0	E-RING		1
27	110-10154	FEED REVERSE ARM ASM.		1
28	RE-0500000-K0	E-RING		1
29	110-09008	WALKING FOOT PIN A		2
30	110-08455	WALKING FOOT ADJUSTING LINK	#01	1
31	110-08703	WALKING FOOT LINK		2
32	110-08604	CONNECTING LINK A		2
33	111-00252	FEED ADJUST LINK ASM.	#02	1
34	110-08802	ADJUSTING LINK FULCRUM SHAFT A		2
35	SS-6090620-SP	SCREW 9/64-40 L=6		2
36	SS-8150710-SP	SCREW 15/64-28 L=7		2
37	110-37355	FEED BAR ASM.		1
38	110-37207	FEED BAR SHAFT		1
39	RC-0150001-KP	RETAINING RING 13.8		1
40	110-10907	FEED ROCKER SHAFT BUSHING		2
41	110-10808	FEED ROCKER SHAFT		1
42	110-09107	WALKING FOOT PIN B		1
43	SS-6090620-SP	SCREW 9/64-40 L=6		1
44	110-08356	FEED ROCKER SHAFT CRANK ASM.		1
45	SS-6121610-SP	SCREW 3/16-28 L=15.5		(1)
46	NS-6680410-SP	NUT 9/32-28		1
47	110-14156	REAR CRANK ASM.		1
48	SS-7121610-SP	SCREW 3/16-28 L=15.5		(1)

NOTE: #01.....FOR DLM-5400N-7-00,-W0
#02.....FOR DLM-5400N-7-0B,-WB

E-mail: service@amfreece.cz; parts@amfreece.cz ; website: www.amfreece.com
Phones: +420 582 309 146 (Service), +420 582 309 286 (Spare Parts) ; Fax: +420 582 360 606

FEED MECHANISM COMPONETS

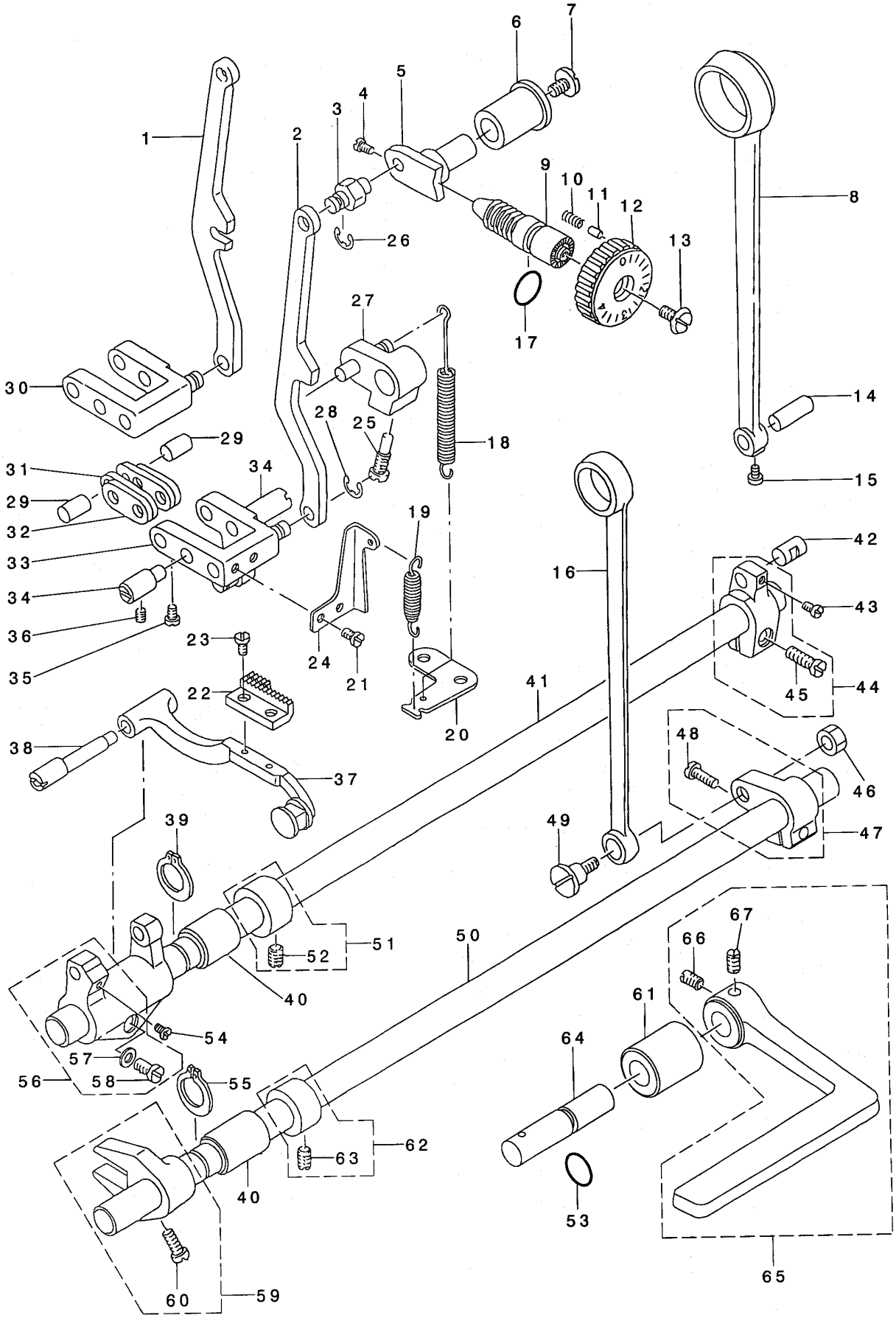

E-mail: service@amfreece.cz; parts@amfreece.cz ; website: www.amfreece.com
Phones: +420 582 309 146 (Service), +420 582 309 286 (Spare Parts) ; Fax: +420 582 360 606

FEED MECHANISM COMPONETS

DET	PART NUMBER	DESCRIPTION	NOTE	QTY.
49	SD-1000801-SH	HINGE SCREW D=10 H=8		1
50	110-14206	FEED DRIVING SHAFT		1
51	CS-147121A-SH	THRUST COLLAR ASM.D=14.72 W=12		1
52	SS-8660610-TP	SCREW 1/4-40 L=6		(2)
53	RO-0781901-00	RUBBER RING		1
54	SS-7110740-TP	SCREW 11/64-40 L=7		1
55	RC-0150001-KP	RETAINING RING 13.8		1
56	110-37157	FEED BAR CRANK ASM.		1
57	WP-0480856-SP	WASHER 4.8X8.4X0.8		(1)
58	SS-7121410-TP	SCREW 3/16-28 L=14		(1)
59	110-14354	DRIVING SHAFT CRANK ASM.		1
60	SS-7111120-SP	SCREW 11/64-40 L=10.5		(1)
61	110-10709	FEED LEVER METAL		1
62	CS-147121A-SH	THRUST COLLAR ASM.D=14.72 W=12		1
63	SS-8660610-TP	SCREW 1/4-40 L=6		(2)
64	110-10519	FEED REVERSE SHAFT		1
65	110-72154	FEED LEVER ASM.		1
66	SS-8661030-SP	SCREW 1/4-40 L=10		(1)
67	SS-8661040-TP	SCREW 1/4-40 L=10		(1)

NOTE: #01.....FOR DLM-5400N-7-00,-W0
#02.....FOR DLM-5400N-7-0B,-WB

E-mail: service@amfreece.cz; parts@amfreece.cz ; website: www.amfreece.com
Phones: +420 582 309 146 (Service), +420 582 309 286 (Spare Parts) ; Fax: +420 582 360 606

THREAD TRIMMER MECHANISM COMPONENTS

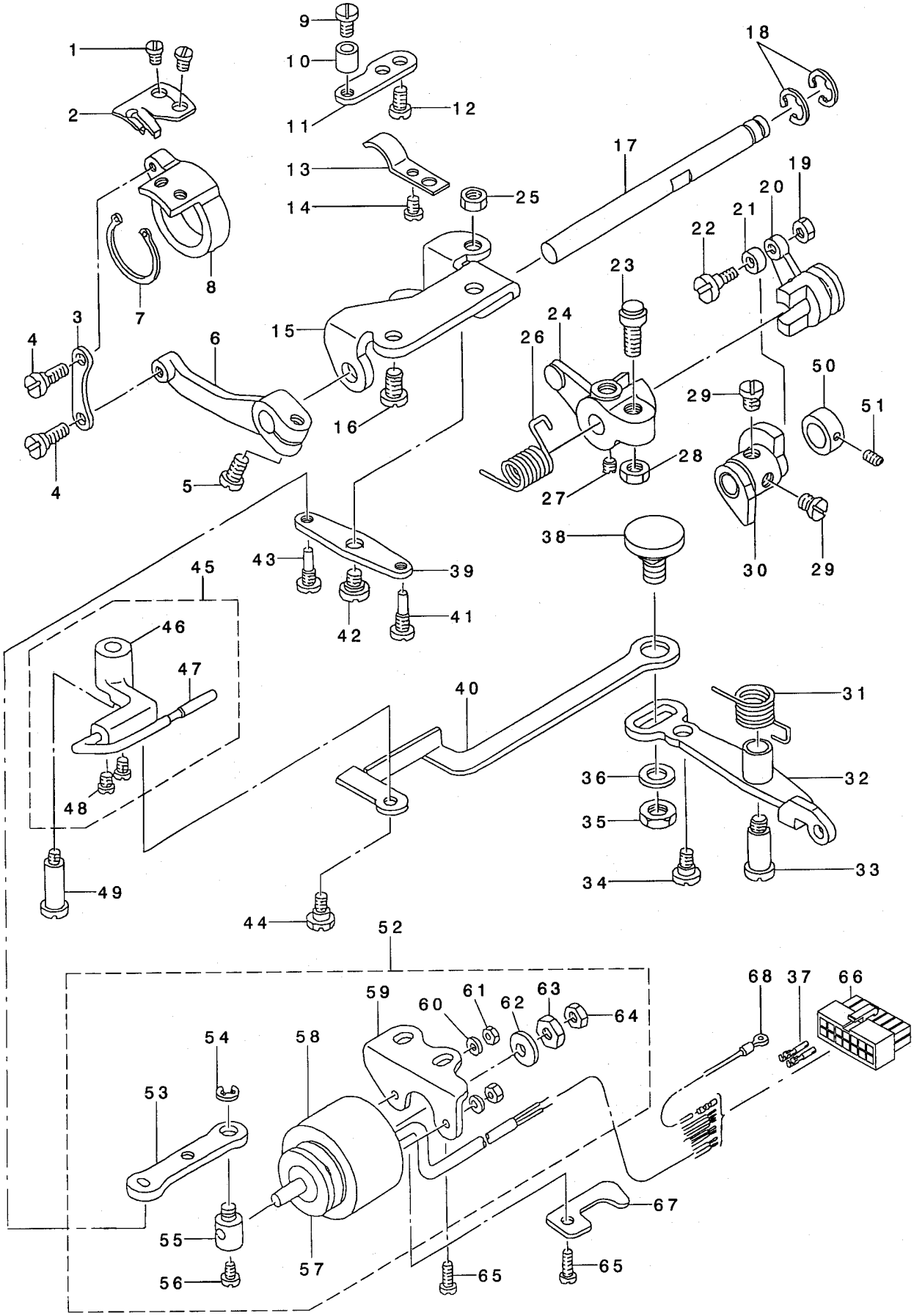

E-mail: service@amfreece.cz; parts@amfreece.cz ; website: www.amfreece.com
Phones: +420 582 309 146 (Service), +420 582 309 286 (Spare Parts) ; Fax: +420 582 360 606

THREAD TRIMMER MECHANISM COMPONENTS

DET	PART NUMBER	DESCRIPTION	NOTE	QTY.
01	113-51806	SCREW		2
02	113-51400	MOVING KNIFE		1
03	113-52101	MOVING KNIFE LINK		1
04	SD-0500251-SP	HINGE SCREW D= 5 H= 2.5		2
05	SS-6121220-TP	SCREW 3/16-28 L=11.5		1
06	113-52200	KNIFE DRIVING		1
07	RC-2651218-KP	RETAINING RING		1
08	113-51905	MOVING KNIFE BASE		1
09	SS-8110710-SP	SCREW 11/64-40 L=6.5		1
10	113-54602	COLLAR		1
11	113-51608	KNIFE MOUNTING BASE		1
12	SS-4110715-SP	SCREW 11/64-40 L=7		2
13	113-51509	COUNTER KNIFE		1
14	SS-1090510-SP	SCREW 9/64-40 L=5		1
15	113-52408	BASE PLATE		1
16	SS-4150915-SP	SCREW 15/64-28 L=9		2
17	113-52309	KNIFE DRIVING SHAFT		1
18	RE-0600000-K0	E-RING 6		2
19	NS-6110310-SP	NUT 11/64-40		1
20	113-52606	SLIDE ARM		1
21	113-54404	DRIVING ROLLER		1
22	D2588-L8W-B00	ROLLER SHAFT		1
23	B1453-771-0A0	STOP SCREW ASM.		1
24	113-52507	KNIFE DRIVING ARM		1
25	NS-6150310-SP	NUT 15/64-28		1
26	113-53406	SPRING		1
27	SS-8660610-TP	SCREW 1/4-40 L=6		2
28	NS-6150430-SP	NUT 15/64-28		1
29	SS-6660610-TP	SCREW 1/4-40 L=6		2
30	113-53604	THREAD TRIMMER CAM		1
31	113-53505	SPRING		1
32	113-53059	CLUTCH LEVER ASM.		1
33	SD-0701511-TP	HING SCREW D=7 H=15.1		1
34	SD-0600361-SP	HINGE SCREW D=6 H=3.6		1
35	NS-6150430-SP	NUT 15/64-28		1
36	WP-0621016-SH	WASHER		1
37	HK-0346400-0B	PIN CONTACT		2
38	110-42306	PICKER LINK PIN		1
39	113-52903	CLUTCH PLATE		1
40	113-54107	PICKER LINK		1
41	113-52705	SCREW PIN, A		1
42	SD-0640261-SP	HINGE SCREW D=3.65 H=2.6		1
43	113-52804	SCREW PIN, B		1
44	SD-0630275-SP	HINGE SCREW D= 6.35 H= 2.7		1
45	113-54057	PICKER ARM ASM.		1
46	113-54008	PICKER ARM		(1)
47	110-42652	THREAD TAKE-UP PICKER ASM.		(1)
48	SS-6090510-SP	SCREW 9/64-40 L=5		(2)
49	SD-0641452-TP	HINGE SCREW D=6.35 H=14.5		1
50	110-42900	CAM COLLAR		1

E-mail: service@amfreece.cz; parts@amfreece.cz ; website: www.amfreece.com
Phones: +420 582 309 146 (Service), +420 582 309 286 (Spare Parts) ; Fax: +420 582 360 606

THREAD TRIMMER MECHANISM COMPONENTS

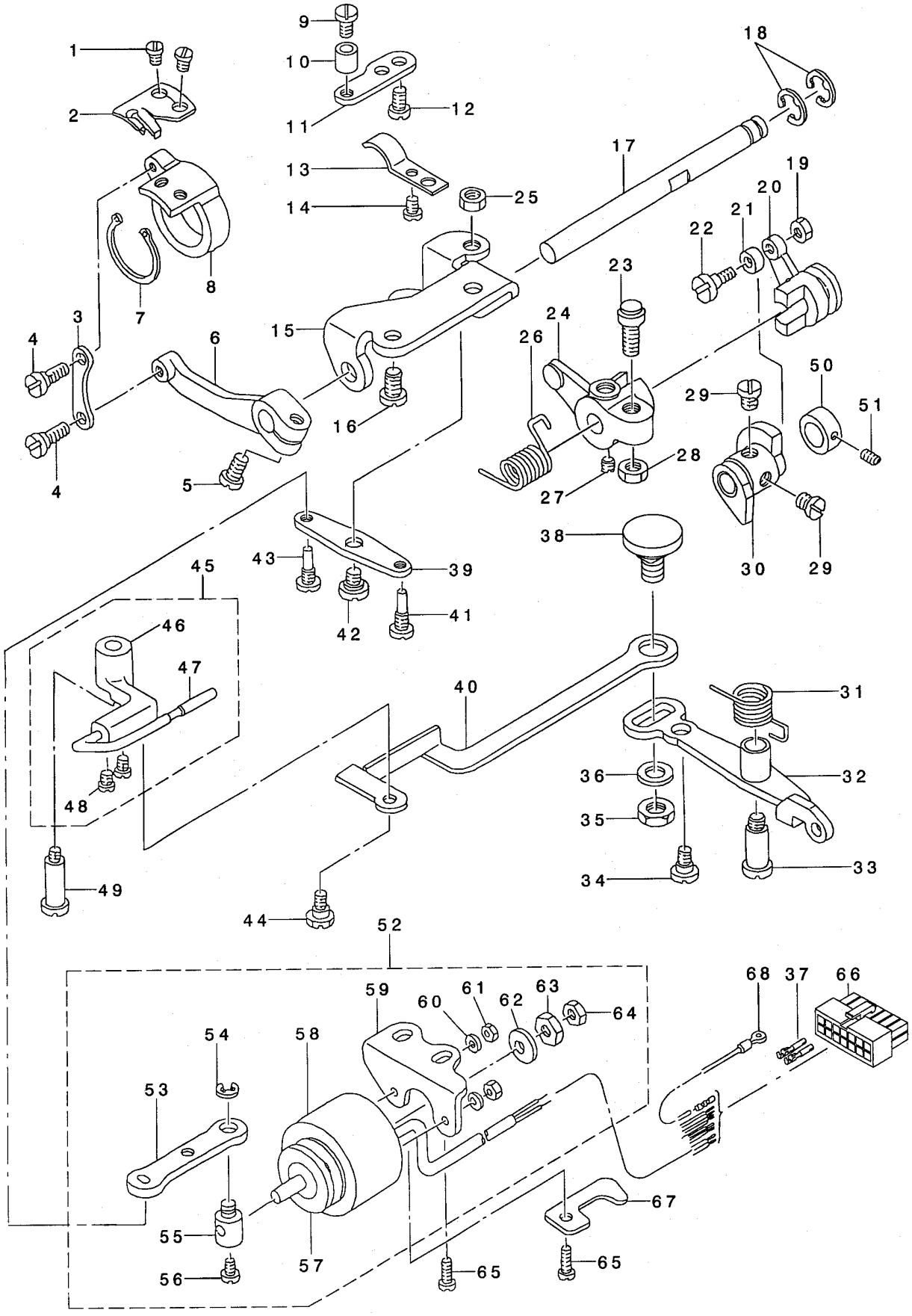

E-mail: service@amfreece.cz; parts@amfreece.cz ; website: www.amfreece.com
Phones: +420 582 309 146 (Service), +420 582 309 286 (Spare Parts) ; Fax: +420 582 360 606

THREAD TRIMMER MECHANISM COMPONENTS

DET	PART NUMBER	DESCRIPTION	NOTE	QTY.
51	SS-8110520-TP	SCREW 11/64-40 L= 4.5		1
52	113-55054	SOLENOID UNIT		1
53	113-53307	CLUTCH LINK		(1)
54	RE-0500000-K0	E-RING		(1)
55	110-43007	SOLENOID PIN		(1)
56	SS-6110710-TP	SCREW 11/64-40 L= 6.5		(1)
57	110-43205	SOLENOID RUBBER A		(1)
58	110-43908	THREAD TRIMMER SOLENOID		(1)
59	110-43403	SOLENOID BASE		(1)
60	WP-0450000-SD	WASHER 4.5X8X0.5		(2)
61	NM-6040000-SN	NUT M4		(2)
62	110-43304	SOLENOID RUBBER		(1)
63	NS-6660410-SH	NUT		(1)
64	NS-6660430-SP	NUT 1/4-40		(1)
65	SS-4151215-SP	SCREW 15/64-28 L=12		2
66	HK-0346101-40	HOUSING 14P		1
67	110-21706	TUBE HOLDER (LOWER)		1
68	110-44054	GROUND WIRE ASM.		1

E-mail: service@amfreece.cz; parts@amfreece.cz ; website: www.amfreece.com
Phones: +420 582 309 146 (Service), +420 582 309 286 (Spare Parts) ; Fax: +420 582 360 606

KNIFE COMPONENTS

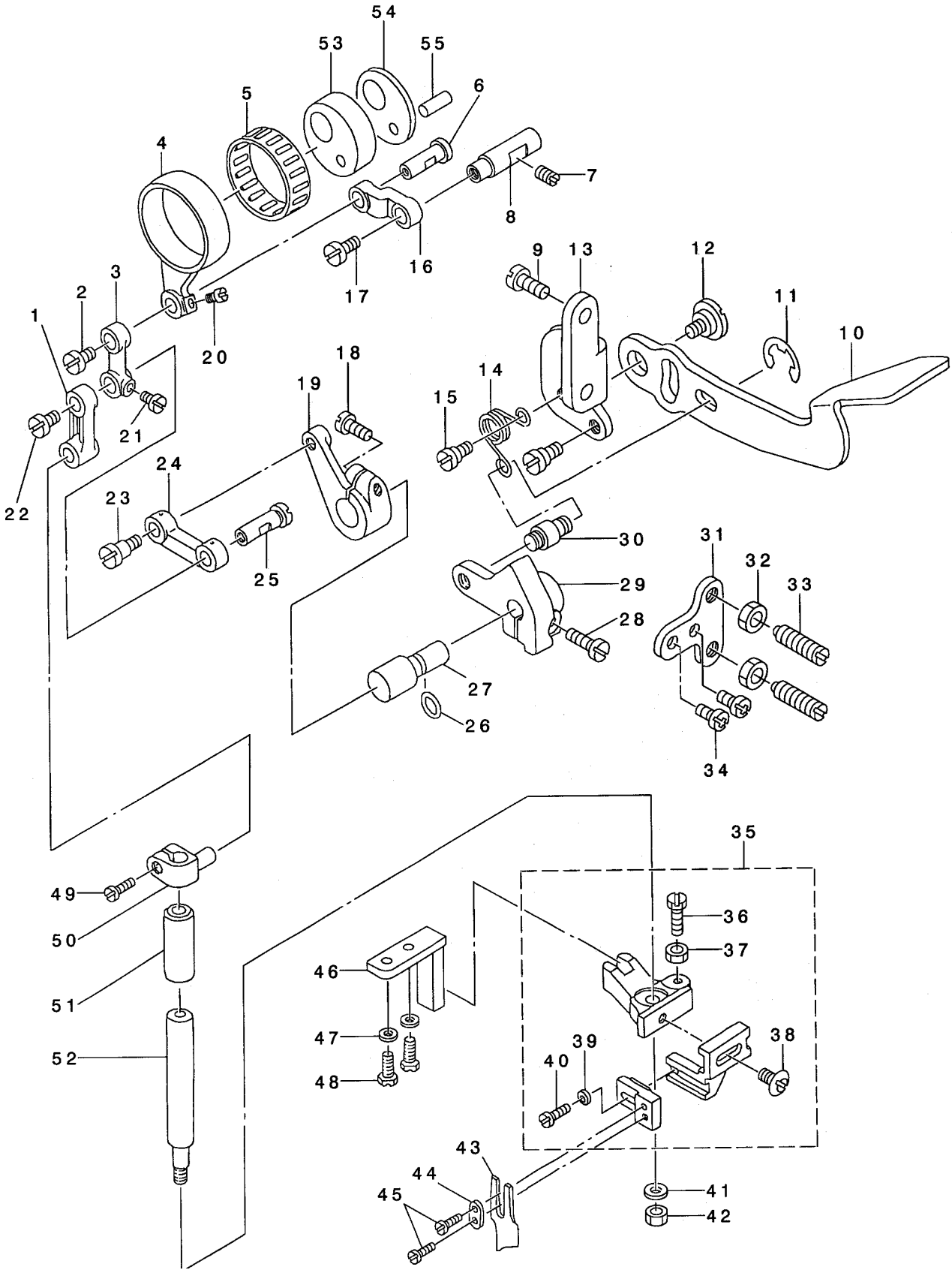

KNIFE COMPONENTS

DET	PART NUMBER	DESCRIPTION	NOTE	QTY.
01	113-57407	KNIFE DRIVING ROD, B		1
02	SS-7110830-SP	SCREW 11/64-40 L= 7.5		1
03	113-57308	KNIFE DRIVING ROD, A		1
04	113-56904	KNIFE DRIVING ROD		1
05	B4123-522-00A	NEEDLE BEARING		1
06	113-57209	PIN		1
07	SS-8151150-TP	SCREW 15/64-28 L=10.5		1
08	113-57001	ROD LINK SHAFT		1
09	SS-4150915-SP	SCREW 15/64-28 L=9		2
10	113-58207	KNIFE LEVER		1
11	RE-0500000-K0	E-RING		1
12	SD-0920321-SP	HINGE SCREW D= 9.20 H= 3.2		1
13	113-58108	KNIFE LEVER BASE		1
14	B4126-530-000	SPRING		1
15	SD-0790431-SP	HINGE SCREW D= 7.94 H= 4.3		1
16	113-57100	KNIFE DRIVING ROD LINK		1
17	SS-7110830-SP	SCREW 11/64-40 L= 7.5		1
18	SS-6121220-TP	SCREW 3/16-28 L=11.5		1
19	113-57704	LINK SUPPORT ARM		1
20	SS-7090520-TP	SCREW 9/64-40 L= 4.5		1
21	SS-7090520-TP	SCREW 9/64-40 L= 4.5		1
22	SS-7110830-SP	SCREW 11/64-40 L= 7.5		1
23	SD-0640604-TP	HING SCREW D=6.35 H=6		1
24	113-57506	KNIFE DRIVING LINK		1
25	113-57209	PIN		1
26	RO-0481901-00	RUBBER RING		1
27	113-57803	KNIFE SET LEVER SHAFT		1
28	SS-6121220-TP	SCREW 3/16-28 L=11.5		1
29	113-57902	KNIFE SET LEVER BASE		1
30	B4124-530-000	SET LEVER PIN		1
31	113-58306	KNIFE LEVER STOPPER		1
32	NS-6150310-SP	NUT 15/64-28		2
33	SS-8152080-SP	SCREW 15/64-28 L=19.5		2
34	SS-4120915-SP	SCREW 3/16-28 L=9		2
35	B4117-530-0A0	KNIFE MOUNTING BASE ASM.		1
36	SS-9121410-TP	SCREW 3/16-28 L=14		(1)
37	NS-6120310-SP	NUT 3/16-28		(1)
38	SS-6110810-TP	SCREW 11/64-40 L=8		(1)
39	WP-0371026-SD	WASHER 3.7X7X1		(1)
40	SS-6090910-SP	SCREW 9/64-40 L=9		(1)
41	WP-0501016-SD	WASHER 5X10.5X1		1
42	NS-6120480-SP	NUT 3/16-28		1
43	B4121-522-000	KNIFE		1
44	B4122-522-000	WASHER		1
45	SS-4080610-SP	SCREW 1/8-44 L=6.4		2
46	B4120-530-000	KNIFE MOUNTING BASE GUIDE		1
47	WP-0480856-SP	WASHER 4.8X8.4X0.8		2
48	SS-9120910-TP	SCREW 3/16-28 L=9		2
49	SS-6090810-TP	SCREW 9/64-40 L=7.5		1
50	B4115-530-000	KNIFE DRIVING STUD CONNECTION		1

E-mail: service@amfreece.cz; parts@amfreece.cz ; website: www.amfreece.com
Phones: +420 582 309 146 (Service), +420 582 309 286 (Spare Parts) ; Fax: +420 582 360 606

KNIFE COMPONENTS

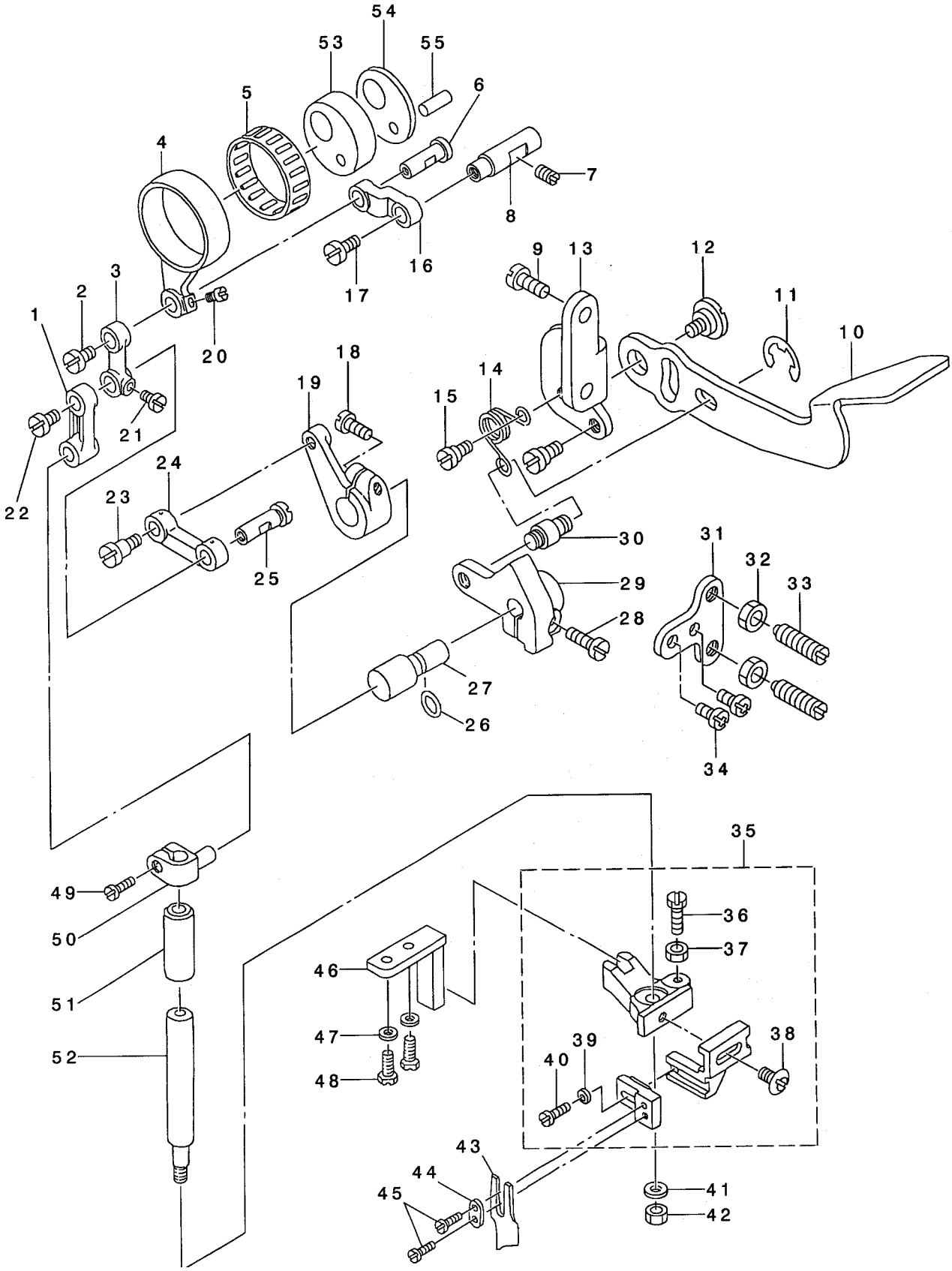

KNIFE COMPONENTS

DET	PART NUMBER	DESCRIPTION	NOTE	QTY.
51	B4116-530-000	BUSHING		1
52	B4114-530-000	KNIFE DRIVING STUD		1
53	B4101-531-000	KNIFE MOUNTING BASE ASM.		1
54	B4132-522-000-A	THRUST PLATE		1
55	B4107-522-000	PIN		1

AUTOMATIC REVERSE FEED COMPONENTS

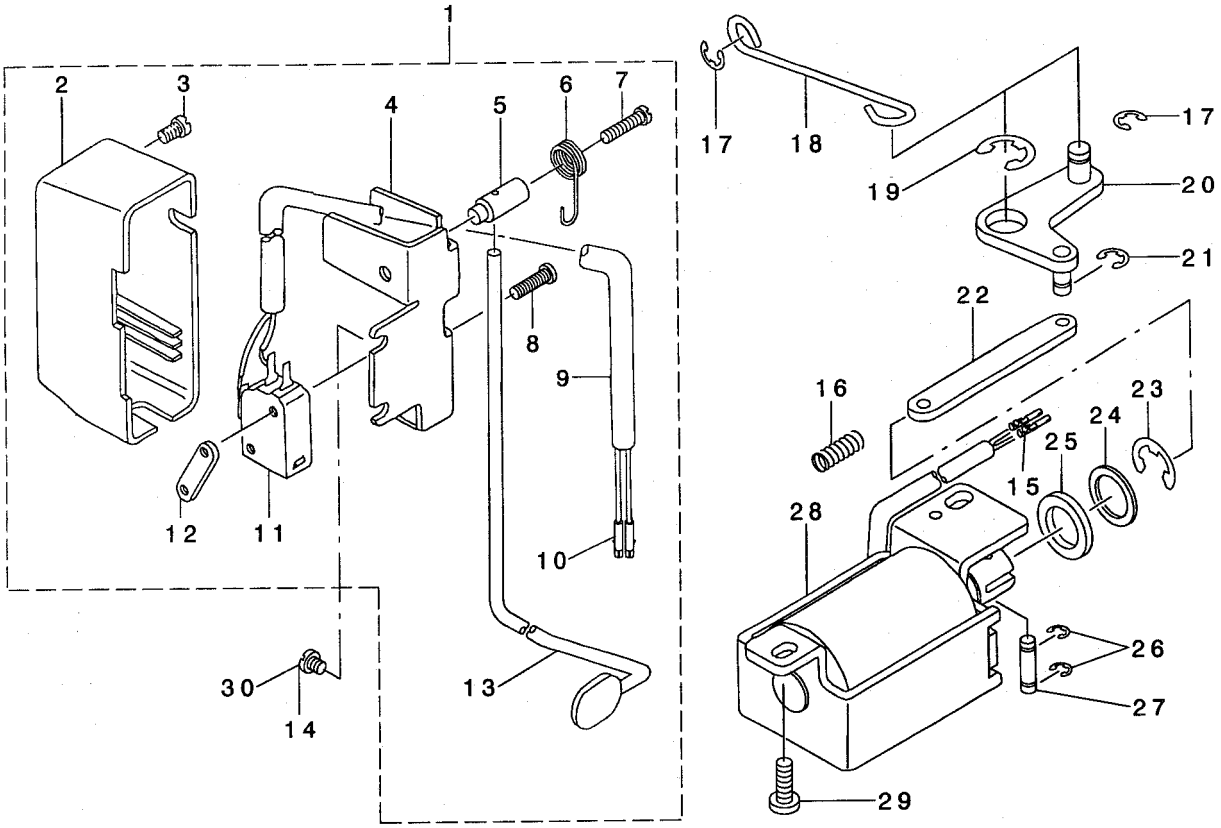

AUTOMATIC REVERSE FEED COMPONENTS

DET	PART NUMBER	DESCRIPTION	NOTE	QTY.
01	113-62357	REVERSE FEED SWITCH ASM.		1
02	110-72501	REVERSE FEED SWITCH COVER		(1)
03	SM-4040655-SP	SCREW		(1)
04	111-02001	REVERSE FEED SWITCH BASE		(1)
05	111-02100	REVERSE FEED SWITCH SHAFT		(1)
06	111-02209	REVERSE FEED SWITCH SPRING		(1)
07	SM-4041655-SP	SCREW		(1)
08	SM-4031501-SC	SCREW M3 L=15		(2)
09	HW-5000700-00	2-CORE CABTYRE CORD		(1.31)
10	HK-0346400-0B	PIN CONTACT		(2)
11	HA-0019000-00	MICROSWITCH		(1)
12	111-02308	MICRO SWITCH PLATE		(1)
13	113-64700	REVERSE FEED SWITCH LEVER		(1)
14	SS-4120615-SP	SCREW 3/16-28 L=6	#01	1
15	HK-0346400-0B	PIN CONTACT		2
16	112-17601	WALKING FOOT SPRING		1
17	RE-0500000-KP	E-RING 5		2
18	111-01300	REVERSE FEED CONNECTING SHAFT		1
19	RE-0900000-K0	E-RING 9		1
20	111-01151	CONNECTING ARM ASM.		1
21	RE-0400000-KP	E-RING 4		1
22	111-01417	REVERSE FEED CONNECTING LINK		1
23	RE-1200000-K0	E-RING 12		1
24	WP-1602616-SZ	WASHER 16X24X2.6		1
25	D2468-555-B00	RUBBER PLUNGER		1
26	RE-0400000-K0	E-RING 4		2
27	111-01003	PLUNGER ARM PIN		1
28	111-02753	REVERSE FEED MAGNET ASM.		1
29	SS-4151215-SP	SCREW 15/64-28 L=12		2
30	SS-4120915-SP	SCREW 3/16-28 L=9		1

NOTE: #01.....FOR DLM-5400N,7-0B

E-mail: service@amfreece.cz; parts@amfreece.cz ; website: www.amfreece.com
Phones: +420 582 309 146 (Service), +420 582 309 286 (Spare Parts) ; Fax: +420 582 360 606

WIPER COMPONENTS

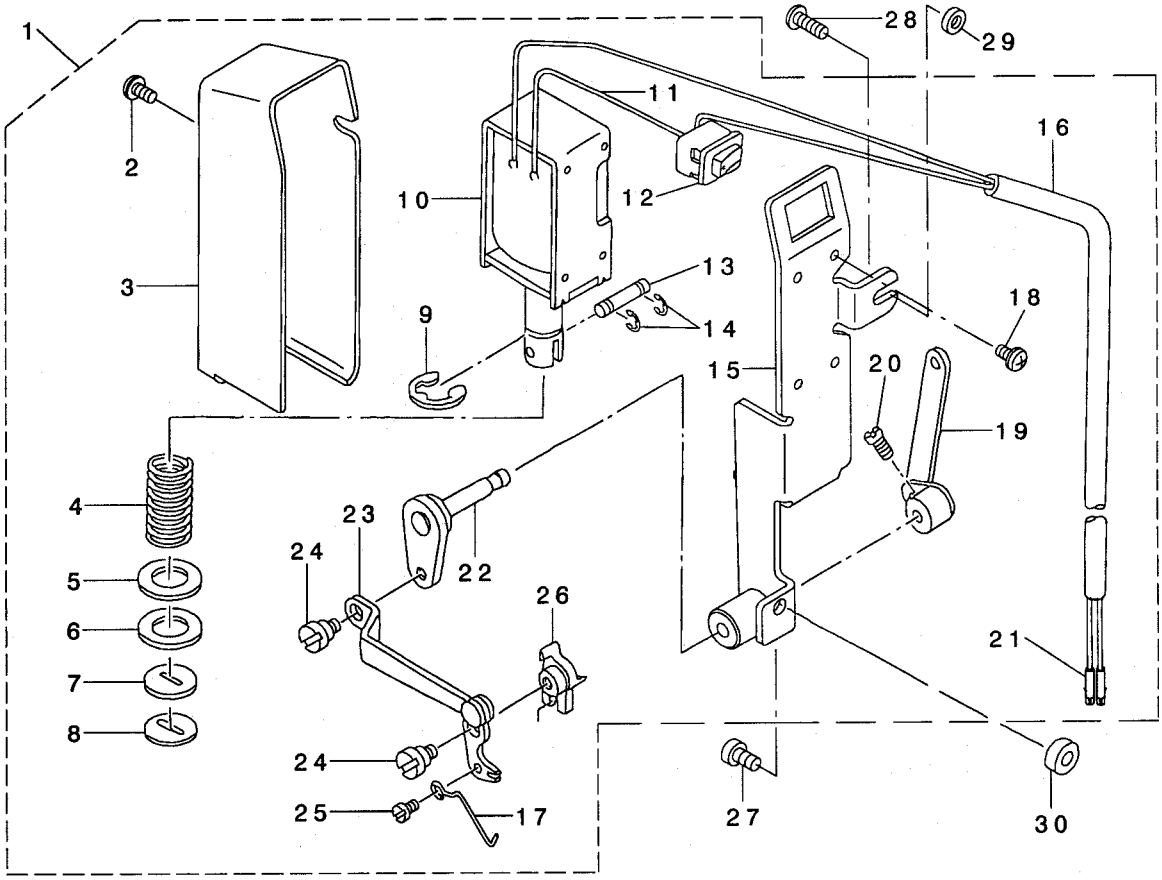

WIPER COMPONENTS

DET	PART NUMBER	DESCRIPTION	NOTE	QTY.
01	113-62456	WIPER ASM.		1
02	SL-4030621-SS	SCREW M3		(1)
03	112-58001	WIPER COVER		(1)
04	112-33400	SPRING		(1)
05	WP-1221016-SP	WASHER		(1)
06	112-34408	SOLENOID RUBBER		(1)
07	112-33301	STOPPER RUBBER		(1)
08	112-34606	STOPPER RUBBER WASHER		(1)
09	RE-0900000-K0	E-RING 9		(1)
10	112-33202	WIPER SOLENOID		(1)
11	HW-2003900-00	ELECTRIC WIRE		(0.05)
12	HA-0005900-00	POWER SWITCH		(1)
13	112-34507	PLUNGER CONNECTING PIN		(1)
14	RE-0300000-K0	E-RING 3		(2)
15	112-33053	WIPER INSTALLING BASE ASM.		(1)
16	HW-5000700-00	2-CORE CABTYRE CORD		(1.33)
17	113-59700	WIPER		(1)
18	SL-4030641-SE	SCREW		(4)
19	112-33251	WIPER LEVER B ASM.		(1)
20	SS-6110710-TP	SCREW 11/64-40 L= 6.5		(2)
21	HK-0346400-0B	PIN CONTACT		(2)
22	113-60153	WIPER LEVER ASM. A		(1)
23	113-59957	WIPER ARM ASM.		(1)
24	SD-0550212-TP	HINGE SCREW D=5.5 H=2.1		(2)
25	SS-7090410-SP	SCREW 9/64-40 L= 3.5		(1)
26	113-59809	WIPER BASE		(1)
27	SS-4121415-SP	SCREW 3/16-28 L=14		1
28	SS-4120915-SP	SCREW 3/16-28 L=9		1
29	WP-0482086-SD	WASHER 4.8X11.5X2	#01	1
30	135-22206	COLLAR		1

NOTE: #01.....FOR DLM-5400N-7-W0

OIL LUBRICATION COMPONENTS

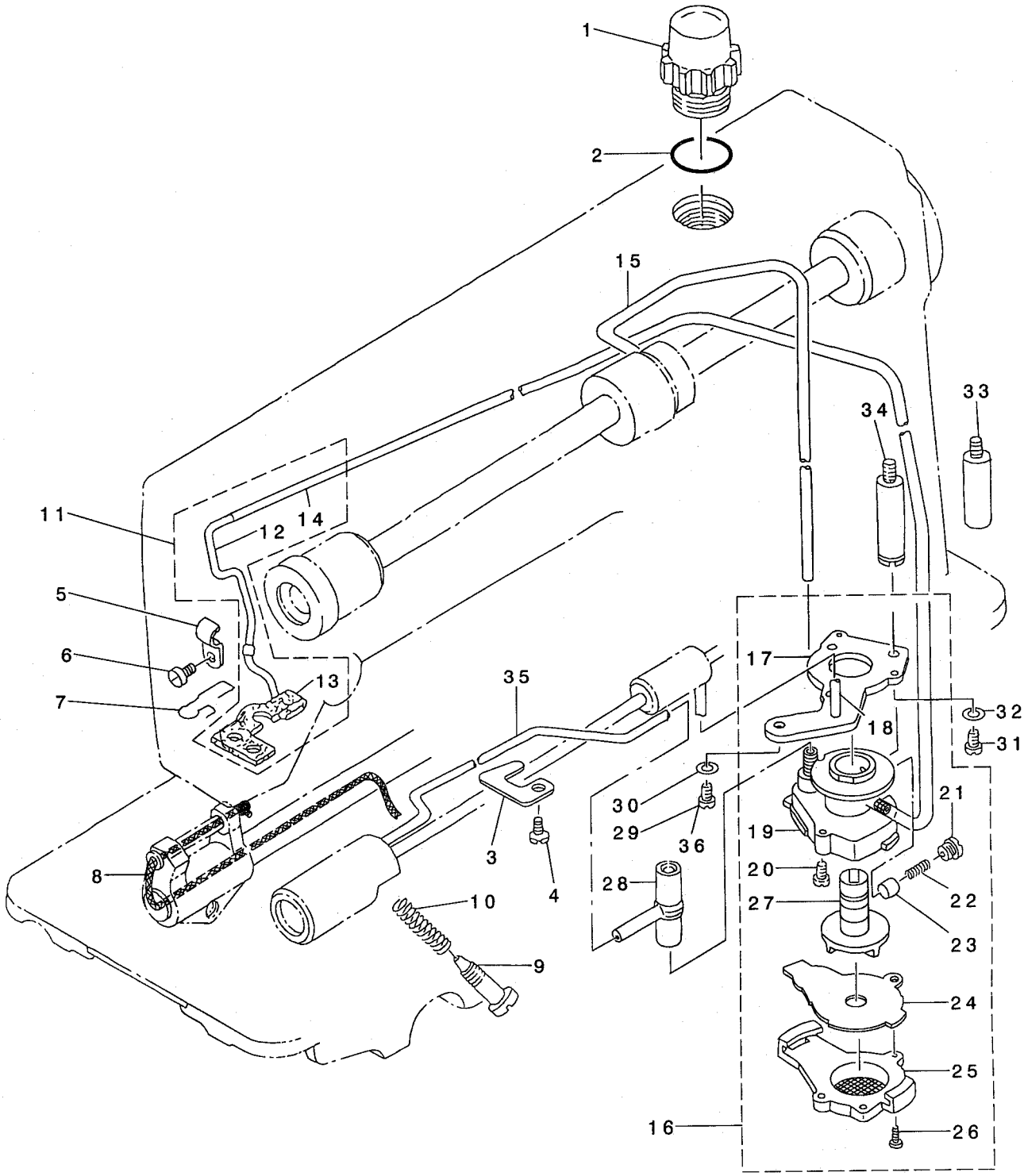

OIL LUBRICATION COMPONENTS

DET	PART NUMBER	DESCRIPTION	NOTE	QTY.
01	110-46604	OIL SIGHT WINDOW		1
02	RO-1952401-00	RUBBER RING		1
03	110-21706	TUBE HOLDER (LOWER)		1
04	SS-4150915-SP	SCREW 15/64-28 L=9		1
05	B3538-112-000	OIL RETURN TUBE HOLDER		1
06	SS-4120615-SP	SCREW 3/16-28 L=6		1
07	113-56201	OIL FELT PRESSER		1
08	CQ-2520000-00	OIL WICK		0.21
09	B3514-412-000	OIL ADJUSTING SCREW		1
10	B2616-372-000	SPRING		1
11	113-55955	OIL RETURN TUBE ASM.		1
12	113-55906	OIL RETURN TUBE		(1)
13	113-56052	OIL FELT ASM.		(1)
14	BT-0500300-EA	OIL TUBE		(0.52)
15	110-21201	MAIN SHAFT OIL TUBE		1
16	110-20054	LUBRICATING OIL PUMP ASM.		1
17	110-20302	OIL PUMP INSTALLING BASE		(1)
18	110-20906	HOOK DRIVING SHAFT OIL TUBE		(1)
19	110-20005	OIL PUMP		(1)
20	SL-4030851-SF	SCREW M3 L=8		(3)
21	110-20500	PLUNGER SCREW		(1)
22	110-20609	PLUNGER SPRING		(1)
23	110-20401	PLUNGER		(1)
24	110-20807	OIL PUMP IMPELLER COVER		(1)
25	110-20203	LUBRICATING OIL PUMP COVER		(1)
26	SE-4301041-SR	SCREW D=3 L=10		(3)
27	110-20708	OIL PUMP IMPELLER		(1)
28	110-21409	RUBBER JOINT		1
29	SS-4151215-SP	SCREW 15/64-28 L=12	#02	1
30	WS-0651310-KP	SPRING WASHER 6.5X11X1.3	#02	1
31	SS-6111010-TP	SCREW 11/64-40 L= 9.5		1
32	WS-0451040-KP	SPRING WASHER 4.5X8.5X1	#02	1
33	113-92107	OIL PUMP SUPPORT	#01	1
34	111-00609	OIL PUMP SUPPORT	#02	1
35	110-21300	OIL TUBE		1
36	SS-4150915-SP	SCREW 15/64-28 L=9	#01	1

NOTE: #01.....FOR DLM-5400N,7-0B,-W0
#02.....FOR DLM-5400N-7-0B,-WB

E-mail: service@amfreece.cz; parts@amfreece.cz ; website: www.amfreece.com
Phones: +420 582 309 146 (Service), +420 582 309 286 (Spare Parts) ; Fax: +420 582 360 606

OIL RESERVOIR COMPONENTS

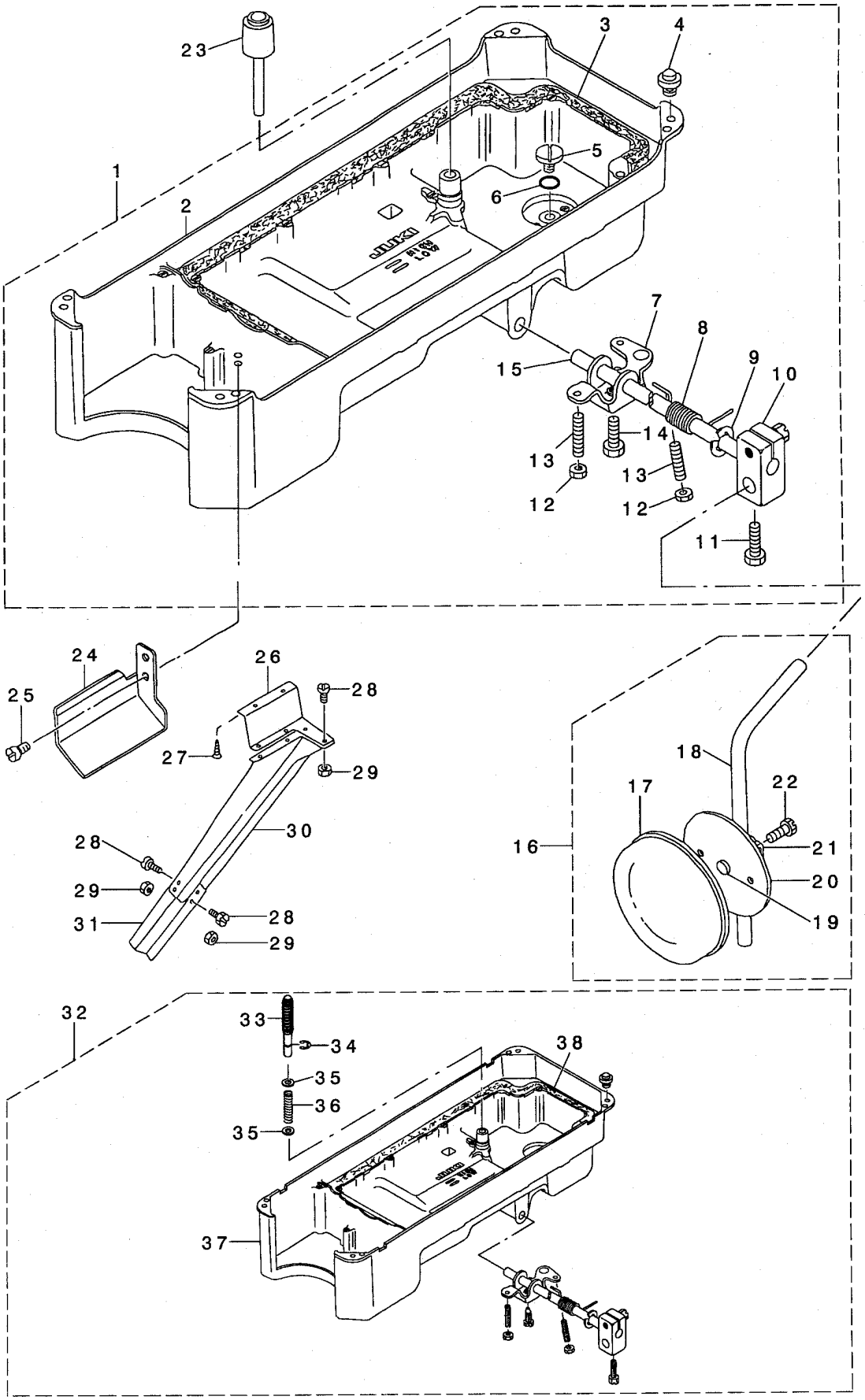

E-mail: service@amfreece.cz; parts@amfreece.cz ; website: www.amfreece.com
Phones: +420 582 309 146 (Service), +420 582 309 286 (Spare Parts) ; Fax: +420 582 360 606

OIL RESERVOIR COMPONENTS

DET	PART NUMBER	DESCRIPTION	NOTE	QTY.
01	113-60757	OIL RESERVOIR ASM.		(1)
02	113-60708	OIL RESERVOIR		(1)
03	110-23108	GASKET		(1)
04	110-47107	RUBBER CUSHION		(4)
05	SS-6700710-SH	SCREW 5/16-24 L=7		(1)
06	RO-0982401-00	RUBBER RING		(1)
07	110-24015	CONNECTING ROT, VERTICAL		(1)
08	110-24106	SPRING		(1)
09	RE-1000000-K0	E-RING 10		(1)
10	110-24510	BRACKET		(1)
11	SM-9062053-SR	SCREW M6 L=20		(2)
12	NM-6060001-SE	NUT M6		(2)
13	SM-8063012-TR	SCREW M6 L=30		(2)
14	SM-9061853-SR	SCREW M6 L=17.5		(1)
15	110-24205	KNEE PRESS ROD		(1)
16	110-23751	KNEE PRESS PLATE ASM.		1
17	B3431-552-000-A	KNEE PRESS PLATE COVER		(1)
18	B3419-122-000	KNEE LIFTER PLATE ROD		(1)
19	110-24403	RUBBER		(1)
20	110-23702	KNEE PRESS PLATE		(1)
21	110-23801	KNEE PRESS PLATE HOLDER		(1)
22	SM-9061203-SE	SCREW M6 L=12		(1)
23	110-24304	KNEE PRESS LIFTER ROD		1
24	113-61003	OIL PUSH GUIDE		1
25	SS-4110715-SP	SCREW 11/64-40 L=7		2
26	113-64403	WASTE MATERIAL CHUTE HOLDER		1
27	SK-3412000-SC	WOOD SCREW D=4.1 L=20		3
28	SS-7090710-SP	SCREW 9/64-40 L= 6.8		8
29	NS-6090310-SP	NUT 9/64-40		8
30	113-64502	WASTE MATERIAL CHUTE, LARGE		1
31	113-64601	WASTE MATERIAL CHUTE, SMALL		1
32	113-69451	OIL RESERVOIR ASM.	#01	1
33	GAK-300010B0	KNEE PRESS LIFTER ROD ASM.	#01	(1)
34	RE-0400000-K0	E-RING 4	#01	(1)
35	WP-0621016-SD	WASHER 6.2X13X1	#01	(2)
36	GAK-30005000	SPRING	#01	(1)
37	113-69402	OIL RESERVOIR	#01	(1)
38	111-41702	GASKET	#01	(1)

NOTE: #01.....FOR JE

E-mail: service@amfreece.cz; parts@amfreece.cz ; website: www.amfreece.com
Phones: +420 582 309 146 (Service), +420 582 309 286 (Spare Parts) ; Fax: +420 582 360 606

BELT COVER & BOBIN WINDER COMPONENTS

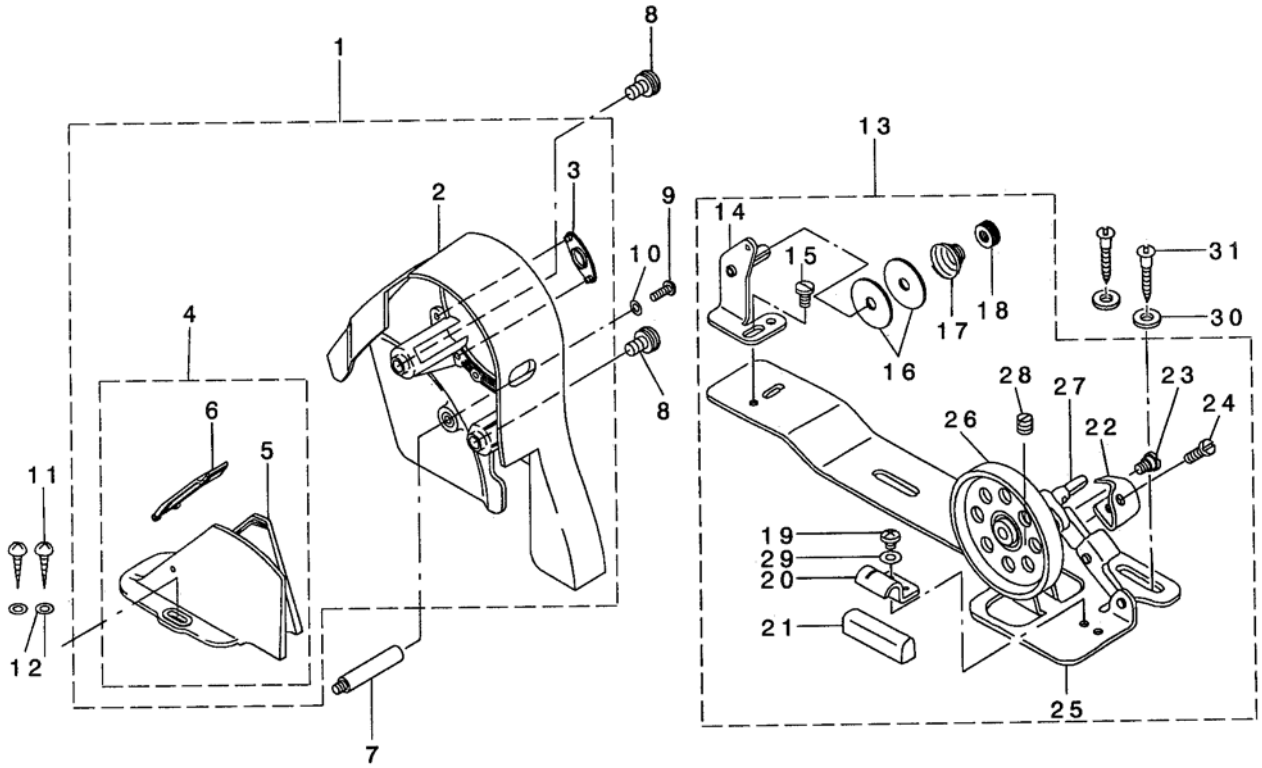

BELT COVER & BOBIN WINDER COMPONENTS

DET	PART NUMBER	DESCRIPTION	NOTE	QTY.
01	110-76650	BELT COVER ASM. (URBANE GREY)		1
02	110-76601	BELT COVER A		(1)
03	110-76700	BELT COVER A CAP		(1)
04	110-76858	BELT COVER B ASM.		(1)
05	110-76809	BELT COVER B		(1)
06	110-76957	BELT COVER B CAP ASM.		(1)
07	110-23504	BELT COVER SUPPORT, A		1
08	110-25202	BELT COVER A SCREW		2
09	SS-4121415-SP	SCREW 3/16-28 L=14		1
10	WP-0501016-SD	WASHER 5X10.5X1		1
11	SK-3412000-SC	WOOD SCREW D=4.1 L=20		2
12	WP-0450826-SC	WASHER 4.5X10X0.8		2
13	110-77567	BOBBIN WINDER COMPL.		1
14	110-78250	THREAD TENSION BRACKET ASM.		(1)
15	SS-7110840-SP	SCREW 11/64-40 L=7.8		(1)
16	B3126-012-000	THREAD TENSION DISK		(2)
17	B3129-012-B00	THREAD TENSION SPRING		(1)
18	B3125-012-000	THREAD TENSION NUT		(1)
19	SS-4110515-SP	SCREW 11/64-40 L=5		(1)
20	110-78102	PRESSER PLATE		(1)
21	B3211-555-000	RUBBER BRAKE		(1)
22	110-78003	POSITIONING FINGER		(1)
23	SD-0490261-SP	HINGE SCREW D=4.9 H=2.6		(1)
24	SS-7081310-SP	SCREW 1/8-44 L=12.5		(1)
25	110-77500	BOBBIN BASE		(1)
26	110-77609	BOBBIN PULLEY		(1)
27	B3204-555-000	BOBBIN WINDER POST		(1)
28	SM-8040502-TP	SCREW M4X0.7 L=5		(1)
29	WP-0480856-SP	WASHER 4.8X8.4X0.8		(1)
30	WP-0450826-SC	WASHER 4.5X10X0.8		2
31	SK-3412000-SC	WOOD SCREW D=4.1 L=20		2

THREAD STAND COMPONETS

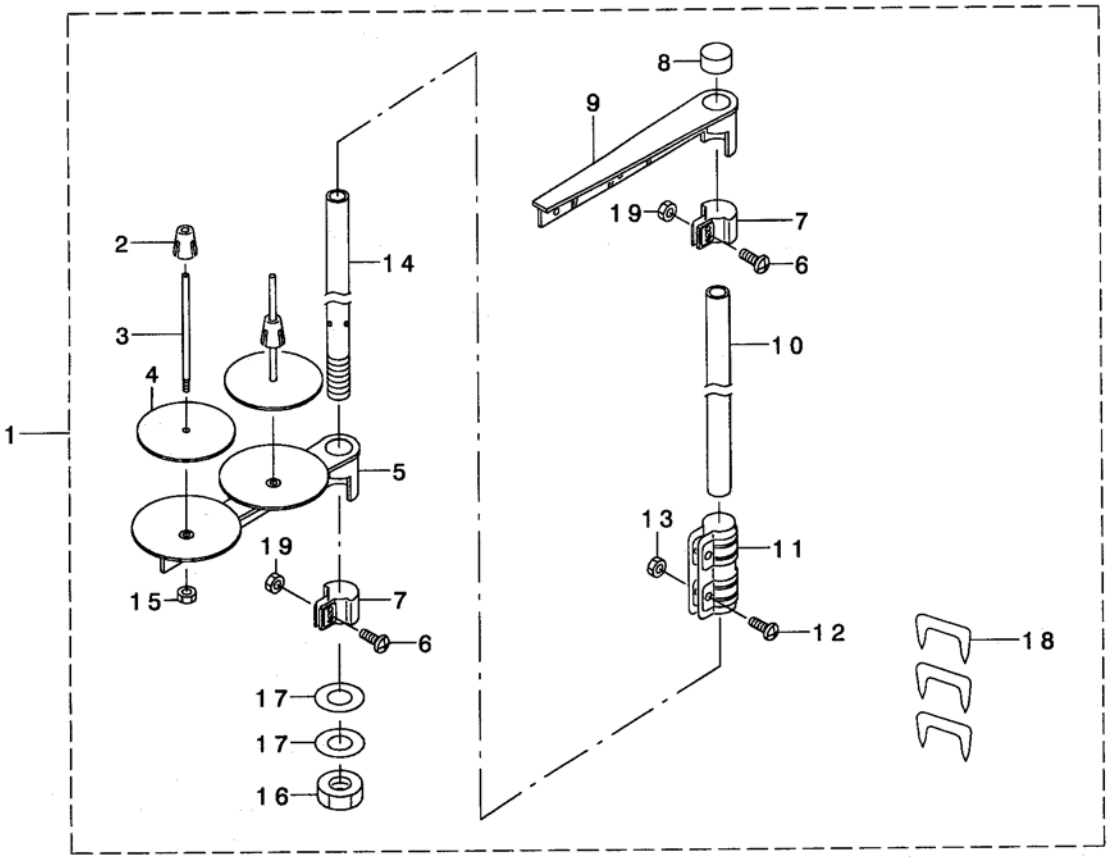

THREAD STAND COMPONETS

DET	PART NUMBER	DESCRIPTION	NOTE	QTY.
01	111-85055	THREAD STAND ASM.		1
02	111-85501	SPOOL RETAINER		(2)
03	B3320-704-L00-A	SPOOL PIN		(2)
04	B3311-012-000	SPOOL REST CUSHION		(2)
05	111-85006	SPOOL REST ARM		(1)
06	SM-4051405-SE	SCREW M5 L=14		(2)
07	111-85402	THREAD GUIDE ARM JOINT		(2)
08	B3311-704-000	SPOOL REST ROD CAP		(1)
09	111-85352	THREAD GUIDE ASM.		(1)
10	111-85204	SPOOL REST ROD,UPPER		(1)
11	B3305-704-000-A	SPOOL REST ROD JOINT		(1)
12	SM-4051405-SE	SCREW M5 L=14		(2)
13	NM-6050001-SE	NUT M5		(2)
14	111-85105	SPOOL REST ROD,LOWER		(1)
15	NM-6050001-SE	NUT M5		(2)
16	B3317-704-000	NUT		(1)
17	WP-1612616-SE	WASHER 16X30X2.6		(2)
18	MAO-11532000	CORD STAPLE		(3)
19	NM-6050001-SE	NUT M5		(2)

TABLE OF EXCHANGING GAUGE PARTS

AMF REECE Better Ideas, Better Made

Specifications of the sub-gauge サブゲージ仕様	Gauge width サブゲージ巾	1 Throat plate 針板	2 Throat plate cover(asm) accesory 針板蓋(組) *付属品	3 Gauge ゲージ	4 Throat plate chip guard 針板布屑カバー	5 Throat plate chip guard accesory 針板布屑ガイド *付属品	6 Chip guard 布屑ガイド	7 Hinging presser (asm) 自由押え	8 Feed dog 送り歯	9 Knife メス	Type 仕様	Note 備考
CA	5/64" (2.0mm)	11346004	B11155310AD	B1190522Y0A	11346905	11347002	11346400	B1524530CB0	B1613522N00A	B4145530C00	Spare parts type 補用パーツ仕様	Cut-after knife type 後メスタイプ
C	3/32" (2.4mm)	11346004	B11155310AD	B1190522X00	11346905	11347002	11346400	B1524530DB0	B1613522N00A	B4121522000	Special type 特別仕様	
CB	3/32" (2.4mm)	11346004	B11155310AD	B1190522X0B	11346905	11347002	11346400	B1524530DB0	B1613522N0C	B4121522000	Spare parts type 補用パーツ仕様	As compaired with B1190522X00, the grooves of the feed dog are 3 rows instead of 2 rows. B1190522X00に対し、送り溝を2列→3列にしたもの
D	1/8" (3.2mm)	11346004	B11155310AD	B1190522S00	11346905	11347002	11346400	B1524530DB0	B1613522N00A	B4121522000	Standard type 標準仕様	
E	5/32" (4.0mm)	11346004	B11155310AD	B1190522Y00	11346905	11347002	11346400	B1524530EB0	B1613522N00A	B4121522000	Special type 特別仕様	
EA	5/32" (4.0mm)	11346004	B11155310AD	11362753	11346905	11347002	11346400	B1524530EB0	B1613522N00A	B4121522000	Spare parts type 補用パーツ仕様	For pattern seamer パターンシーマ用
F	3/16" (4.8mm)	11346004	B11155310AD	B1190522T00	11346905	11347002	11346400	B1524530EB0	B1613522N00A	B4121522000	Special type 特別仕様	
FA	3/16" (4.8mm)	11346004	B11155310AD	B1190522T0A	11346905	11347002	11346400	B1524530EB0	B1613522N00A	B4121522A00	Spare parts type 補用パーツ仕様	Cut-before knife type 前メスタイプ
FB	3/16" (4.8mm)	11346004	B11155310AD	B1190522Y0C	11346905	11347002	11346400	B1524530EB0	B1613522N00A	B4121522000	Spare parts type 補用パーツ仕様	As compared with B1190522T00, the needle hole of which diameter is set to ø1.9 to 1.2mm. B1190522T00に対し針穴径をø1.9→1.2mmに
G	27/128" (5.3mm)	11346004	B11155300AF	B1190522Y0F	11347101	11347200	11346400	B1524530GB0	B1613522N00A	B4121522000	Spare parts type 補用パーツ仕様	
H	1/4" (6.4mm)	11346004	B11155300AF	B1190522U00	11347101	11347200	11346509	B1524530GB0	B1613522W00A	B4121522000	Special type 特別仕様	
HA	1/4" (6.4mm)	11346004	B11155300AF	B1190522U0AA	11347101	11347200	11346509	B1524530GB0	B1613522A0AA	B4121522000	Spare parts type 補用パーツ仕様	For preventing material from being caught by the 4-teeth food dog 4枚歯布ずまり防止用
K	5/16" (7.9mm)	11346004	B11155300AF	B1190522Y0B	11347101	11347200	11346509	B1524530GB0	B1613522W00A	B4121522000	Spare parts type 補用パーツ仕様	
M	3/8" (9.5mm)	11346004	B11155300AM	B1190522V00	11347309	11347408	11346509	B1524530GB0	B1613522W00A	B4121522000	Special type 特別仕様	
MA	3/8" (9.5mm)	11346004	B11155300AM	B1190522V0A	11347309	11347408	11346509	B1524530GB0	B1613522B00	B4121522000	Spare parts type 補用パーツ仕様	As compared with B1190522V00, the feed amount of the feed dog is reduced. B1190522V00に対して送り歯長さを短縮
P	7/16" (11.1mm)	11346004	B11155300AM	B1190522Y0M	11347309	11347408	11346608	B1524530GB0	B1613522W00A	B4121522000	Spare parts type 補用パーツ仕様	

Caution] One piece of knife is supplied with the machine as an accessory with the exception of JA,JH and TP.

注記] メスは、JA・JH・TP以外のみ1個を付属同梱する。

Revised 09/2005

E-mail: service@amfreece.cz; parts@amfreece.cz ; website: www.amfreece.com
Phones: +420 582 309 146 (Service), +420 582 309 286 (Spare Parts) ; Fax: +420 582 360 606

INDEX

PART NUMBER	PAGE	DET	QTY
01.1327.0.000			
01.1327.0.000	3-13	34	2
04.9034.0.401			
04.9034.0.401	3-15	44	(1)
04.9084.0.002	3-15	42	1
04.9084.0.501	3-15	43	(1)
04.9084.0.652	3-23	11	1
04.9084.0.704	3-23	3	1
04.9084.0.705	3-13	35	1
04.9084.0.706	3-7	28	1
04.9084.0.707	3-9	10	1
04.9084.0.713	3-19	9	1
04.9084.0.714	3-7	10	1
08.6000.0.025			
08.6000.0.025	3-15	66	4
08.6000.3.006	3-7	42	1
08.6000.3.010	3-15	69*	3
08.6000.3.012	3-7	2	1
08.6000.3.016	3-3	10	1
08.6000.4.006	3-21	5	(2)
08.6000.4.008	3-13	25	2
08.6000.4.012	3-7	34	1
08.6000.4.020	3-13	19	3
08.6000.4.025	3-13	32	2
08.6000.4.040	3-13	12	2
08.6000.5.016	3-3	77	2
08.6000.5.016	3-11	13	1
08.6000.5.025	3-3	65	1
08.6000.6.035	3-3	6	1
08.6000.6.065	3-3	48	3
08.6000.6.080	3-15	16	1
08.6000.8.018	3-15	54	1
08.6010.7.012			
08.6010.7.012	3-9	12*	2
08.6012.1.008	3-11	12	1
08.6012.7.012	3-7	8	3
08.6015.3.025	3-9	21	1
08.6100.3.008			
08.6100.3.008	3-3	58	4
08.6100.3.010	3-3	47	2
08.6100.3.010	3-7	17	2
08.6100.3.016	3-9	13*	2
08.6100.3.030	3-9	7	3
08.6100.5.010	3-3	66	2
08.6100.6.020	3-13	15	1
08.6112.7.006	3-11	15	2

PART NUMBER	PAGE	DET	QTY
08.6200.3.006			
08.6200.3.006	3-3	44	3
08.6200.3.008	3-7	5	4
08.6200.3.008	3-9	24*	2
08.6200.4.008	3-3	3	3
08.6200.4.008	3-13	20	2
08.6200.4.010	3-13	9	2
08.6200.5.010	3-3	59	2
08.6200.5.012	3-3	32	1
08.6200.5.012	3-7	3	3
08.6200.5.016	3-3	20	2
08.6200.5.016	3-15	64*	5
08.6200.5.016	3-15	65	24
08.6200.6.010	3-11	4	2
08.6200.6.012	3-21	7	(2)
08.6200.6.016	3-11	5	2
08.6200.6.025	3-15	67*	4
08.6212.8.030	3-15	55*	8
08.6312.0.020	3-15	47*	12
08.6312.3.012	3-7	18	1
08.6312.4.008	3-11	19	1
08.6312.8.025	3-15	50*	32
08.6312.8.025	3-15	51	4
08.6400.3.003			
08.6400.3.003	3-9	9	3
08.6400.3.003	3-13	3	2
08.6400.3.005	3-15	46	2
08.6400.4.005	3-3	53	2
08.6400.4.008	3-9	6	2
08.6400.4.010	3-3	40	1
08.6400.5.004	3-3	31	2
08.6400.6.008	3-15	63	1
08.6420.6.008	3-13	21	1
08.6500.5.010			
08.6500.5.010	3-3	38	1
08.6532.8.055	3-15	71	2
08.6630.5.020	3-15	68*	16
08.6630.5.020	3-15	70	6
08.6632.2.016	3-15	62	4
08.6632.3.016	3-15	61	3
08.6646.3.016	3-15	58*	6
08.6646.3.016	3-15	59	2
08.6646.4.030	3-15	60*	12
08.6702.3.000			
08.6702.3.000	3-3	74	1
08.6702.3.000	3-7	6	7
08.6702.3.000	3-9	16*	7

PART NUMBER	PAGE	DET	QTY
08.6702.4.000			
08.6702.4.000	3-13	6	2
08.6702.5.000	3-3	23	5
08.6702.5.000	3-9	03*	3
08.6702.6.000	3-15	45	1
08.6702.7.000	3-7	9	3
08.6702.8.000	3-15	56*	10
08.6752.8.000	3-15	49*	28
08.6802.3.000			
08.6802.3.000	3-7	19	1
08.6802.3.000	3-9	20	5
08.6802.8.000	3-3	64	1
08.6802.8.000	3-15	57	25
08.6832.6.000	3-21	8	(2)
08.6852.0.000	3-15	48*	12
08.6852.3.000	3-9	15*	5
08.6852.4.000	3-3	73	1
08.6852.4.000	3-11	9	1
08.6852.4.000	3-13	4	2
08.6852.6.000	3-3	7	1
08.6852.8.000	3-3	46	1
08.6852.8.000	3-15	52*	40
08.6852.8.000	3-15	53	23
08.7000.6.012			
08.7000.6.012	3-7	40	1
08.7000.8.015	3-11	14	1
84.0005.9.196			
12.0008.3.267	3-15	34*	1
12.0008.3.411	3-3	26	2
12.0008.3.411	3-3	57	1
12.0008.3.411	3-13	22	4
12.0008.3.411	3-23	13	1
12.0008.3.411	3-23	23	1
12.0008.3.417	3-23	16	1
12.0008.3.418	3-23	20	1
12.0008.3.420	3-23	22	1
12.0008.3.426	3-23	26	2
12.0008.3.463	3-23	17	1
12.0008.3.473	3-7	23	
12.0008.3.479	3-23	19	1
12.0008.3.482	3-23	10	8
12.0008.3.484	3-23	18	1
12.0008.3.521	3-3	72	1
12.0008.3.621	3-3	4	2
12.0008.3.621	3-9	25	1
12.0008.3.632	3-25	15	1

e-mail: service@amfreece.cz; parts@amfreece.cz; website: www.amfreece.com
Phones: +420 582 309 146 (Service), +420 582 309 286 (Spare Parts); Fax: +420 582 360 606

AMF REECE
Better Ideas, Better Made

INDEX

PART NUMBER	PAGE	DET	QTY
12.0008.3.634			
12.0008.3.634	3-11	6	1
12.0008.3.638	3-23	12	1
12.0008.3.649	3-9	26	1
12.0008.3.651	3-23	14	1
12.0008.3.652	3-23	8	1
12.0008.3.659	3-3	5	1
12.0008.3.670	3-3	56	1
12.0008.3.673	3-11	10	1
12.0008.3.693	3-7	30	1
12.0008.3.694	3-23	2	1
12.0008.3.696	23	21	1
12.0008.3.700	3-3	8	1
12.0008.3.701	3-3	21	2
12.0008.3.701	3-23	6	1
12.0008.3.715	3-23	15	1
12.0008.3.716	3-23	24	1
12.0008.3.717	3-23	25	1
12.0008.3.718	3-13	5	2
12.0008.3.719	3-9	29	1
12.0008.4.403			
12.0008.4.403	3-15	3	1
12.0008.4.411	3-23	9	1
12.0008.4.484	3-19	4	1
12.0008.4.571	3-21	3	(2)
12.0008.4.574	3-21	4	(1)
12.0008.4.580	3-3	1	1
12.0008.4.584	3-15	13	1
12.0008.4.594	3-15	38	1
12.0008.4.640	3-11	7	2
12.0008.4.654	3-11	8	1
12.0008.4.690	3-19	5	1
12.0008.4.713	3-15	28	1
12.0008.4.720	3-19	2	1
12.0008.4.721	3-19	3	1
12.0008.4.735	3-19	10	1
12.0008.4.748	3-19	8	1
12.0008.4.762	3-19	13	2
12.0008.4.835	3-19	1	2
12.0008.4.868	3-15	5	1
12.0008.4.871	3-19	7	1
84.0002.0.125			
12.0008.6.215	3-25	2	1
12.0008.6.219	3-15	24*	2
12.0008.6.220	3-15	22*	1
12.0008.6.406	3-21	2	(2)
12.0008.6.517	3-15	41	(4)
12.0008.6.901	3-15	26*	1

PART NUMBER	PAGE	DET	QTY
12.0010.4.025			
12.0010.4.025	3-7	37	1
12.0010.4.025	3-13	37	1
12.1014.0.308	3-3	34	1
12.1014.0.308	3-13	24	2
12.1014.0.510	3-7	22	1
12.2010.0.003	3-3	51	1
12.5050.1.502	3-15	40	1
17.0011.2.013			
17.0011.2.013	3-13	31	2
19.0044.1.629			
19.0044.1.629	3-13	30	2
24.0146.0.000			
24.0146.0.000	3-21	6	(1)
24.0147.0.000	3-21	9	(1)
24.6032.4.010	3-19	11	1
84.0001.3.203			
84.0001.3.203	3-7	24	1
84.0002.0.016	3-15	21*	5
84.0002.0.125	3-15	19	1
84.0002.0.125	3-25	1	1
84.0002.0.345	3-15	25*	2
84.0002.0.352	3-15	20*	5
84.0002.0.380	3-15	37	1
84.0002.0.430	3-15	08*	1
84.0002.0.435	3-15	09*	1
84.0002.0.436	3-15	01*	1
84.0002.0.440	3-15	23*	1
84.0002.1.062	3-15	11*	12
84.0002.5.280	3-3	28	1
84.0002.5.440	3-7	39	1
84.0002.5.450	3-7	41	1
84.0002.5.540	3-7	38*	1
84.0002.5.550	3-7	38	1
84.0002.5.560	3-7	38*	1
84.0002.8.200	3-3	33	1
84.0002.8.251	3-9	5	1
84.0002.9.010	3-3	29	1
84.0010.9.830	3-25	3	1
84.0002.9.020	3-3	37	1
84.0002.9.070	3-3	35	1
84.0002.9.126	3-3	36	1
84.0003.0.370	3-25	4	1
84.0003.0.380	3-25	5	1
84.0003.0.620	3-3	49	1
84.0003.0.715	3-7	29	1

PART NUMBER	PAGE	DET	QTY
84.0003.0.790			
84.0003.0.790	3-9	27	1
84.0003.0.802	3-9	2	1
84.0003.0.805	3-9	17	1
84.0003.0.821	3-9	1	1
84.0003.0.835	3-9	8	1
84.0003.0.860	3-9	14	2
84.0003.0.870	3-9	22	1
84.0003.0.871	3-3	75	1
84.0003.0.880	3-9	28	2
84.0003.0.890	3-9	18	1
84.0003.0.900	3-9	30	1
84.0004.0.163	3-7	21	1
84.0004.1.149	3-23	5	1
84.0004.5.115	3-9	04*	1
84.0004.6.525	3-3	60	2
84.0004.6.530	3-3	25	1
84.0004.6.535	3-3	24	1
84.0004.6.560	3-15	35*	1
84.0004.6.580	3-15	04*	4
84.0004.6.586	3-21	1	1
84.0004.6.655	3-15	14	1
84.0004.6.655	3-15	27	1
84.0004.6.680	3-15	15	1
84.0004.6.685	3-15	17	2
84.0004.6.720	3-15	29	1
84.0004.6.725	3-15	36	1
84.0004.6.750	3-7	15	1
84.0004.6.771	3-15	12*	2
84.0004.6.790	3-15	18	1
84.0004.6.815	3-15	32*	1
84.0004.6.820	3-15	31*	1
84.0004.6.910	3-23	1	1
84.0004.6.935	3-3	67	1
84.0004.7.115	3-23	4	1
84.0004.7.148	3-23	7	1
84.0004.8.455	3-15	6	1
84.0004.9.035	3-15	33*	1
84.0004.9.100	3-15	10*	6
84.0004.9.420	3-15	30*	1
84.0005.5.115	3-3	50	1
84.0005.7.010	3-7	14	1
84.0005.8.220	3-3	16	1
84.0005.9.011	3-11	3	1
84.0005.9.013	3-11	11	1
84.0005.9.016	3-7	36	4
84.0005.9.022	3-21	11	1
84.0005.9.196	3-25	14	4
84.0005.9.038	3-15	7	1
84.0005.9.050	3-7	13	1

e-mail: service@amfreece.cz; parts@amfreece.cz; website: www.amfreece.com
Phones: +420 582 309 146 (Service), +420 582 309 286 (Spare Parts); Fax: +420 582 360 606

INDEX

PART NUMBER	PAGE	DET	QTY
84.0005.9.056			
84.0005.9.056	3-13	33	1
84.0005.9.057	3-15	39	1
84.0005.9.058	3-13	36	1
84.0005.9.061	3-13	29	1
84.0005.9.065	3-13	16	1
84.0005.9.087	3-7	27	1
84.0005.9.088	3-7	43	1
84.0005.9.110	3-3	63	1
84.0005.9.140	3-3	76	1
84.0005.9.161	3-11	17	1
84.0005.9.166	3-11	20	1
84.0005.9.166	3-11	22	1
84.0005.9.170	3-7	7	1
84.0005.9.171	3-11	18	1
84.0005.9.172	3-11	16	1
84.0005.9.173	3-11	17	1
84.0003.0.220	3-25	9	10
84.0005.9.173	3-25	10	1
84.0005.9.300	3-3	30	1
84.0005.9.301	3-3	19	1
84.0005.9.325	3-3	43	1
84.0005.9.330	3-3	9	1
84.0005.9.340	3-3	42	1
84.0005.9.345	3-3	13	2
84.0005.9.346	3-3	45	1
84.0005.9.350	3-3	55	1
84.0005.9.355	3-3	52	1
84.0005.9.360	3-9	23	1
84.0005.9.365	3-7	32	1
84.0002.9.010	3-25	11	1
84.0005.9.366	3-7	35	1
84.0005.9.367	3-7	32*	1
84.0005.9.368	3-7	32*	1
84.0005.9.370	3-9	11	1
84.0005.9.380	3-3	22	1
84.0005.9.390	3-7	33	1
84.0005.9.391	3-7	25	1
84.0005.9.415	3-9	19	1
84.0005.9.420	3-3	15	1
84.0005.9.425	3-3	12	1
84.0005.9.430	3-7	20	1
84.0005.9.442	3-13	26	1
84.0005.9.445	3-13	27	1
84.0005.9.450	3-13	2	2
84.0005.9.455	3-13	1	1
84.0005.9.460	3-13	18	1
84.0005.9.465	3-13	17	1
84.0005.9.470	3-13	14	1
84.0005.9.475	3-13	7	1

PART NUMBER	PAGE	DET	QTY
84.0005.9.480			
84.0005.9.480	3-13	13	1
84.0005.9.485	3-13	10	1
84.0005.9.490	3-13	11	2
84.0005.9.491	3-13	28	1
84.0005.9.495	3-3	41	1
84.0005.9.500	3-7	12	1
84.0005.9.501	3-7	1	1
84.0005.9.502	3-7	11	1
84.0005.9.505	3-3	62	1
84.0005.9.515	3-7	31	1
84.0005.9.516	3-3	39	1
84.0005.9.517	3-3	17	1
84.0005.9.518	3-3	18	1
84.0005.9.520	3-3	11	1
84.0005.9.520	3-3	14	1
84.0005.9.522	3-3	27	1
84.0005.9.525	3-13	8	2
84.0005.9.550	3-3	68	3
84.0005.9.551	3-3	69	3
84.0005.9.552	3-3	70	1
84.0005.9.553	3-3	71	1
84.0005.9.570	3-3	61	1
84.0005.9.365	3-25	12	1
84.0003.0.390	3-25	13	1
84.8001.0.001			
84.8001.0.001	3-19	12	1
84.8001.0.002	3-21	10	(1)
84.8001.0.003	3-19	6	1

PART NUMBER	PAGE	DET	QTY
JUKI			
100-04109			
100-04109	3-29	15	1
110-00619	3-29	12	1
110-00858	3-29	4	1
110-01104	3-29	57	4
110-01500	3-29	33	1
110-01609	3-29	55	(1)
110-01658	3-29	53	1
110-02300	3-33	21	1
110-02409	3-33	30	1
110-02508	3-33	31	1
110-02904	3-33	40	1
110-03001	3-33	42	1
110-04009	3-35	22	1
110-04207	3-35	25	1
110-04306	3-35	24	1
110-05204	3-33	7	(1)
110-06350	3-37	7	1
110-06756	3-37	4	1
110-06905	3-37	9	1
110-07101	3-37	10	1
110-08000	3-33	27	(1)
110-08059	3-33	25	1
110-08109	3-33	28	1
110-08208	3-39	8	1
110-08356	3-39	44	1
110-08455	3-39	30	1
110-08604	3-39	32	2
110-08703	3-39	31	2
110-08802	3-39	34	2
110-09008	3-39	29	2
110-09107	3-39	42	1
110-09206	3-39	14	1
110-09503	3-39	1	1
110-09602	3-39	3	1
110-09701	3-39	5	1
110-09909	3-39	9	1
110-10154	3-39	27	1
110-10303	3-39	18	1
110-10410	3-39	25	1
110-10519	3-39	64	1
110-10709	3-39	61	1
110-10808	3-39	41	1
110-10907	3-39	40	2
110-11301	3-39	20	1
110-11509	3-39	6	1
110-14008	3-39	16	1
110-14156	3-39	47	1
110-14206	3-39	50	1
110-14354	3-39	59	1

INDEX

PART NUMBER	PAGE	DET	QTY
110-15005			
110-15005	3-35	30	1
110-15807	3-35	26	1
110-15906	3-35	34	(1)
110-15955	3-35	33	1
110-17357	3-33	2	1
110-18504	3-29	32	1
110-18603	3-29	49	1
110-20005	3-55	19	(1)
110-20054	3-55	16	1
110-20203	3-55	25	(1)
110-20302	3-55	17	(1)
110-20401	3-55	23	(1)
110-20500	3-55	21	(1)
110-20609	3-55	22	(1)
110-20708	3-55	27	(1)
110-20807	3-55	24	(1)
110-20906	3-55	18	(1)
110-21201	3-55	15	1
110-21300	3-55	35	1
110-21409	3-55	28	1
110-21706	3-43	67	1
110-21706	3-55	3	1
110-23108	3-57	3	(1)
110-23504	3-59	7	1
110-23702	3-57	20	(1)
110-23751	3-57	16	1
110-23801	3-57	21	(1)
110-24015	3-57	7	(1)
110-24106	3-57	8	(1)
110-24205	3-57	15	(1)
110-24304	3-57	23	1
110-24403	3-57	19	(1)
110-24510	3-57	10	(1)
110-25202	3-59	8	2
110-30202	3-29	21	1
110-32158	3-33	36	(1)
110-32562	3-33	39	1
110-37157	3-39	56	1
110-37207	3-39	38	1
110-37355	3-39	37	1
110-37405	3-39	19	1
110-38650	3-35	46	1
110-38759	3-35	37	1
110-38809	3-35	31	1
110-38908	3-35	42	1
110-39062	3-33	5	(1)
110-39070	3-33	4	1
110-42306	3-43	38	1
110-42652	3-43	47	(1)

PART NUMBER	PAGE	DET	QTY
110-42900			
110-42900	3-43	50	1
110-43007	3-43	55	(1)
110-43205	3-43	57	(1)
110-43304	3-43	62	(1)
110-43403	3-43	59	(1)
110-43908	3-43	58	(1)
110-44054	3-43	68	1
110-45002	3-29	28	(1)
110-45101	3-29	25	(1)
110-45200	3-29	27	(1)
110-45309	3-29	24	(1)
110-45408	3-37	15	2
110-45705	3-37	38	1
110-46000	3-37	46	1
110-46604	3-55	1	1
110-47107	3-57	4	(4)
110-52701	3-39	11	1
110-70901	3-29	11	1
110-71461	3-33	32	1
110-71602	3-37	22	1
110-71701	3-37	23	1
110-71800	3-37	1	1
110-72006	3-39	12	1
110-72154	3-39	65	1
110-72204	3-29	36	(1)
110-72352	3-29	35	1
110-72451	3-29	23	1
110-72501	3-51	02	(1)
110-76601	3-59	2	(1)
110-76650	3-59	1	1
110-76700	3-59	3	(1)
110-76809	3-59	5	(1)
110-76858	3-59	4	(1)
110-76957	3-59	6	(1)
110-77500	3-59	25	(1)
110-77567	3-59	13	1
110-77609	3-59	26	(1)
110-78003	3-59	22	(1)
110-78102	3-59	20	(1)
110-78250	3-59	14	(1)
110-92301	3-39	24	1
111-00104			
111-00104	3-29	22	1
111-00252	3-39	33	1
111-00401	3-39	2	1
111-00500	3-29	19	1
111-00609	3-55	34	1
111-01003	3-51	27	1

PART NUMBER	PAGE	DET	QTY
111-01151			
111-01151	3-51	20	1
111-01300	3-51	18	1
111-01417	3-51	22	1
111-02001	3-51	04	(1)
111-02100	3-51	05	(1)
111-02209	3-51	06	(1)
111-02308	3-51	12	(1)
111-02605	3-29	10	1
111-02753	3-51	28	1
111-41355	3-35	45	1
111-41702	3-57	38	(1)
111-85006	3-61	5	(1)
111-85055	3-61	1	1
111-85105	3-61	14	(1)
111-85204	3-61	10	(1)
111-85352	3-61	9	(1)
111-85402	3-61	7	(2)
111-85501	3-61	2	(2)
112-05309			
112-05309	3-37	14	1
112-05408	3-37	13	1
112-17601	3-51	16	1
112-33053	3-53	15	(1)
112-33202	3-53	10	(1)
112-33251	3-53	19	(1)
112-33301	3-53	7	(1)
112-33400	3-53	4	(1)
112-34408	3-53	6	(1)
112-34507	53	13	(1)
112-34606	3-53	8	(1)
112-58001	3-53	3	(1)
113-00407			
113-00407	3-29	58	1
113-00506	3-29	2	1
113-01355	3-37	31	1
113-01405	3-37	32	(1)
113-01652	3-37	20	1
113-01702	3-37	5	1
113-05513	3-29	46	1
113-05901	3-37	37	1
113-06107	3-37	34	1
113-25750	3-29	1	1
113-45600	3-29	62	1
113-45709	3-29	60	1
113-45808	3-29	75	2
113-46004	3-29	78	1
113-46400	3-29	74	1

e-mail: service@amfreece.cz; parts@amfreece.cz; website: www.amfreece.com
Phones: +420 582 309 146 (Service), +420 582 309 286 (Spare Parts); Fax: +420 582 360 606

INDEX

PART NUMBER	PAGE	DET	QTY
113-46905			
113-46905	3-29	77	1
113-49008	3-33	10	1
113-49107	3-33	17	1
113-49214	3-33	12	(1)
113-49370	3-33	11	1
113-49404	3-33	18	1
113-49701	3-35	03	1
113-49800	3-35	23	1
113-49909	3-35	43	1
113-51004	3-35	40	1
113-51400	3-43	2	1
113-51509	3-43	13	1
113-51608	3-43	11	1
113-51806	3-43	1	2
113-51905	3-43	8	1
113-52101	3-43	3	1
113-52200	3-43	6	1
113-52309	3-43	17	1
113-52408	3-43	15	1
113-52507	3-43	24	1
113-52606	3-43	20	1
113-52705	3-43	41	1
113-52804	3-43	43	1
113-52903	3-43	39	1
113-53059	3-43	32	1
113-53307	3-43	53	(1)
113-53406	3-43	26	1
113-53505	3-43	31	1
113-53604	3-43	30	1
113-54008	3-43	46	(1)
113-54057	3-43	45	1
113-54107	3-43	40	1
113-54404	3-43	21	1
113-54602	3-43	10	1
113-55054	3-43	52	1
113-55203	3-37	43	1
113-55450	3-37	35	1
113-55609	3-37	41	1
113-55906	3-55	12	(1)
113-55955	3-55	11	1
113-56052	3-55	13	(1)
113-56201	3-55	7	1
113-56904	3-47	4	1
113-57001	3-47	8	1
113-57100	3-47	16	1
113-57209	3-47	6	1
113-57209	3-47	25	1
113-57308	3-47	3	1
113-57407	3-47	1	1

PART NUMBER	PAGE	DET	QTY
113-57506			
113-57506	3-47	24	1
113-57704	3-47	19	1
113-57803	3-47	27	1
113-57902	3-47	29	1
113-58108	3-47	13	1
113-58207	3-47	10	1
113-58306	3-47	31	1
113-59700	3-53	17	(1)
113-59809	3-53	26	(1)
113-59957	3-53	23	(1)
113-60153	3-53	22	(1)
113-60708	3-57	2	(1)
113-60757	3-57	1	(1)
113-61003	3-57	24	1
113-62357	3-51	01	1
113-62456	3-53	1	1
113-64403	3-57	26	1
113-64502	3-57	30	1
113-64601	3-57	31	1
113-64700	3-51	13	(1)
113-69402	3-57	37	(1)
113-69451	3-57	32	1
113-92107	3-55	33	1
114-00405			
114-00405	3-29	30	1
135-22206			
135-22206	3-53	30	1
180-77503			
180-77503	3-29	68	1
B1110-012-000			
B1110-012-000	3-29	54	(1)
B1114-012-000	3-29	8	1
B1115-522-000-A	3-29	82	1
B1115-530-00F	3-29	81	1
B1148-555-000	3-39	10	1
B1190-522-S00	3-29	47	1
B1193-530-000	3-29	76	1
B1215-552-000	3-33	20	1
B1305-012-0A0	3-35	13	(1)
B1306-155-0A0	3-35	15	(1)
B1306-155-0B0	3-35	12	(1)
B1306-155-0C0	3-35	11	1
B1307-155-0A0	3-35	18	(1)
B1307-155-0B0	3-35	17	(1)
B1308-155-0A0	3-35	20	(1)

PART NUMBER	PAGE	DET	QTY
B1402-552-000-A			
B1402-552-000-A	3-35	2	1
B1403-155-000	3-35	7	1
B1405-012-000	3-35	1	1
B1408-552-000	3-33	8	(1)
B1411-552-0A0	3-35	5	1
B1414-555-000	3-35	4	1
B1418-530-000	3-35	9	1
B1453-771-0A0	3-43	23	1
B1501-530-000	3-37	42	1
B1502-541-000	3-37	27	1
B1505-227-000-A	3-37	25	1
B1510-227-000	3-37	24	1
B1521-555-000	3-37	2	1
B1524-530-DB0	3-37	30	1
B1613-522-N00-A	3-39	22	1
B1808-552-000	3-35	35	(1)
B1903-552-000	3-33	9	(1)
B1905-541-B00	3-33	6	(2)
B1909-505-000	3-33	3	1
B2616-372-000	3-55	10	1
B3111-126-000	3-29	43	(1)
B3115-552-000	3-29	41	(1)
B3118-415-000	3-29	64	(1)
B3120-125-000	3-29	37	(1)
B3125-012-000	3-59	18	(1)
B3126-012-000	3-29	40	(2)
B3126-012-000	3-59	16	(2)
B3128-012-000	3-29	42	(1)
B3129-012-A00	3-29	38	(1)
B3129-012-B00	3-59	17	(1)
B3132-552-000	3-29	39	(1)
B3133-415-0A0	3-29	63	1
B3136-415-000	3-29	65	(1)
B3204-555-000	3-59	27	(1)
B3211-555-000	3-59	21	(1)
B3214-047-000	3-29	26	(2)
B3305-704-000-A	3-61	11	(1)
B3311-012-000	3-61	4	(2)
B3311-704-000	3-61	8	(1)
B3317-704-000	3-61	16	(1)
B3320-704-L00-A	3-61	3	(2)
B3419-122-000	3-57	18	(1)
B3431-552-000-A	3-57	17	(1)
B3514-412-000	3-55	9	1
B3538-112-000	3-55	5	1
B4101-531-000	3-47	53	1
B4107-522-000	3-47	55	1
B4114-530-000	3-47	52	1
B4115-530-000	3-47	50	1

e-mail: service@amfreece.cz; parts@amfreece.cz; website: www.amfreece.com
Phones: +420 582 309 146 (Service), +420 582 309 286 (Spare Parts); Fax: +420 582 360 606

INDEX

PART NUMBER	PAGE	DET	QTY
B4116-530-000			
B4116-530-000	3-47	51	1
B4117-530-0A0	3-47	35	1
B4120-530-000	3-47	46	1
B4121-522-000	3-47	43	1
B4122-522-000	3-47	44	1
B4123-522-00A	3-47	5	1
B4124-530-000	3-47	30	1
B4126-530-000	3-47	14	1
B4132-522-000-A	3-47	54	1
B9117-012-000	3-35	36	1
BT-0500300-EA	3-55	14	(0.52)
CM-3002000-01			
CM-3002000-01	3-29	84	1
CM-3002000-B1	3-29	85	1
CM-3002000-C1	3-29	14	1
CM-3002001-01	3-29	86	1
CM-3002001-A1	3-29	13	1
CQ-2520000-00			
CQ-2520000-00	3-55	8	0.21
CS-064061A-SP			
CS-064061A-SP	3-37	17	1
CS-079073A-SH	3-35	38	1
CS-079101A-SH	3-35	28	1
CS-147121A-SH	3-33	22	1
CS-147121A-SH	3-39	51	1
CS-147121A-SH	3-39	62	1
D2468-555-B00			
D2468-555-B00	3-51	25	1
D2588-L8W-B00	3-43	22	1
GAK-300010B0			
GAK-300010B0	3-57	33	(1)
GAK-30005000	3-57	36	(1)
HA-0005900-00			
HA-0005900-00	3-53	12	(1)
HA-0019000-00	3-51	11	(1)
HK-0346101-40			
HK-0346101-40	3-43	66	1
HK-0346400-0B	3-43	37	2
HK-0346400-0B	3-51	10	(2)
HK-0346400-0B	3-51	15	2
HK-0346400-0B	3-53	21	(2)

PART NUMBER	PAGE	DET	QTY
HW-2003900-00			
HW-2003900-00	3-53	11	(0.05)
HW-5000700-00	3-51	09	(1.31)
HW-5000700-00	3-53	16	(1.33)
HX-0004300-00			
HX-0004300-00	3-33	44	1
M4007-110-0AA			
M4007-110-0AA	3-33	37	(1)
M4007-110-0AB	3-33	38	(1)
M6001-350-AAA	29	69	1
M6001-350-AAF	29	73	1
MAO-11532000	3-61	18	(3)
MC-2005009-00	3-35	27	1
MDB-100B1400	3-35	10	1
MDP-500B1400	3-35	41	1
NM-6040000-SN			
NM-6040000-SN	3-43	61	(2)
NM-6050001-SE	3-61	13	(2)
NM-6050001-SE	3-61	15	(2)
NM-6050001-SE	3-61	19	(2)
NM-6060001-SE	3-57	12	(2)
NS-6090310-SP			
NS-6090310-SP	3-29	16	1
NS-6090310-SP	3-57	29	8
NS-6110310-SP	3-43	19	1
NS-6120310-SP	3-47	37	(1)
NS-6120480-SP	3-47	42	1
NS-6150310-SP	3-43	25	1
NS-6150310-SP	3-47	32	2
NS-6150430-SP	3-43	28	1
NS-6150430-SP	3-43	35	1
NS-6620310-SP	3-37	6	2
NS-6660410-SH	3-43	63	(1)
NS-6660430-SP	3-43	64	(1)
NS-6680410-SP	3-39	46	1
RC-0150001-KP			
RC-0150001-KP	3-39	39	1
RC-0150001-KP	3-39	55	1
RC-1850001-KP	3-33	24	1
RC-2651218-KP	3-43	7	1
RE-0300000-K0			
RE-0300000-K0	3-37	33	(2)
RE-0300000-K0	3-37	36	1
RE-0300000-K0	3-53	14	(2)

PART NUMBER	PAGE	DET	QTY
RE-0400000-K0			
RE-0400000-K0	3-51	26	2
RE-0400000-K0	3-57	34	(1)
RE-0400000-KP	3-51	21	1
RE-0500000-K0	3-37	8	1
RE-0500000-K0	3-37	19	1
RE-0500000-K0	3-39	26	1
RE-0500000-K0	3-39	28	1
RE-0500000-K0	3-43	54	(1)
RE-0500000-K0	3-47	11	1
RE-0500000-KP	3-51	17	2
RE-0600000-K0	3-43	18	2
RE-0900000-K0	3-51	19	1
RE-0900000-K0	3-53	9	(1)
RE-1000000-K0	3-57	9	(1)
RE-1200000-K0	3-51	23	1
RO-0291801-00			
RO-0291801-00	3-33	43	1
RO-0371801-00	3-37	3	1
RO-0442401-00	3-33	13	(1)
RO-0481901-00	3-47	26	1
RO-0781901-00	3-39	53	1
RO-0922702-00	3-39	17	1
RO-0982401-00	3-57	6	(1)
RO-1952401-00	3-55	2	1
SD-0490261-SP			
SD-0490261-SP	3-59	23	(1)
SD-0500251-SP	3-43	4	2
SD-0550212-TP	3-53	24	(2)
SD-0600322-SD	3-37	12	1
SD-0600361-SP	3-43	34	1
SD-0630275-SP	3-43	44	1
SD-0640261-SP	3-37	40	1
SD-0640261-SP	3-43	42	1
SD-0640604-TP	3-47	23	1
SD-0641452-TP	3-43	49	1
SD-0701511-TP	3-43	33	1
SD-0720331-SP	3-37	11	1
SD-0790431-SP	3-47	15	1
SD-0920321-SP	3-47	12	1
SD-1000801-SH	3-39	49	1
SE-4301041-SR			
SE-4301041-SR	3-55	26	(3)
SK-3412000-SC	3-57	27	3
SK-3412000-SC	3-59	11	2
SK-3412000-SC	3-59	31	2

e-mail: service@amfreece.cz; parts@amfreece.cz; website: www.amfreece.com
Phones: +420 582 309 146 (Service), +420 582 309 286 (Spare Parts); Fax: +420 582 360 606

INDEX

PART NUMBER	PAGE	DET	QTY
SL-4030621-SS			
SL-4030621-SS	3-53	2	(1)
SL-4030641-SE	3-53	18	(4)
SL-4030851-SF	3-55	20	(3)
SL-4051001-MZ	3-33	41	2
SM-4031501-SC			
SM-4031501-SC	3-51	08	(2)
SM-4040655-SP	3-51	03	(1)
SM-4041655-SP	3-51	07	(1)
SM-4051405-SE	3-61	6	(2)
SM-4051405-SE	3-61	12	(2)
SM-8040502-TP	3-59	28	(1)
SM-8063012-TR	3-57	13	(2)
SM-9061203-SE	3-57	22	(1)
SM-9061853-SR	3-57	14	(1)
SM-9062053-SR	3-57	11	(2)
SS-1090510-SP			
SS-1090510-SP	3-43	14	1
SS-1120710-SP	3-29	59	4
SS-2110915-SP	3-29	48	2
SS-2110915-SP	3-29	80	2
SS-4080310-SP	3-29	79	2
SS-4080310-SP	3-29	83	1
SS-4080610-SP	3-47	45	2
SS-4080620-TP	3-39	23	2
SS-4110515-SP	3-59	19	(1)
SS-4110715-SP	3-43	12	2
SS-4110715-SP	3-57	25	2
SS-4120615-SP	3-29	29	1
SS-4120615-SP	3-29	31	1
SS-4120615-SP	3-29	67	1
SS-4120615-SP	3-37	44	1
SS-4120615-SP	3-37	47	1
SS-4120615-SP	3-51	14	1
SS-4120615-SP	3-55	6	1
SS-4120915-SP	3-29	9	8
SS-4120915-SP	3-35	44	2
SS-4120915-SP	3-35	47	1
SS-4120915-SP	3-47	34	2
SS-4120915-SP	3-51	30	1
SS-4120915-SP	3-53	28	1
SS-4121015-SP	3-29	52	3
SS-4121215-SP	3-29	70	1
SS-4121415-SP	3-53	27	1
SS-4121415-SP	3-59	9	1
SS-4150915-SP	3-37	39	1
SS-4150915-SP	3-43	16	2
SS-4150915-SP	3-47	9	2

PART NUMBER	PAGE	DET	QTY
SS-4150915-SP			
SS-4150915-SP	3-55	4	1
SS-4150915-SP	3-55	36	1
SS-4151215-SP	3-43	65	2
SS-4151215-SP	3-51	29	2
SS-4151215-SP	3-55	29	1
SS-6060210-SP	3-29	56	(1)
SS-6080410-SP	3-29	3	1
SS-6090510-SP	3-43	48	(2)
SS-6090620-SP	3-39	15	1
SS-6090620-SP	3-39	35	2
SS-6090620-SP	3-39	43	1
SS-6090650-SP	3-33	29	2
SS-6090670-TP	3-35	6	(1)
SS-6090810-TP	3-47	49	1
SS-6090910-SP	3-37	29	1
SS-6090910-SP	3-47	40	(1)
SS-6110420-TP	3-35	29	(2)
SS-6110610-TP	3-29	50	1
SS-6110610-TP	3-29	61	1
SS-6110710-TP	3-43	56	(1)
SS-6110710-TP	3-53	20	(2)
SS-6110810-TP	3-47	38	(1)
SS-6111010-SP	3-35	32	1
SS-6111010-TP	3-55	31	1
SS-6111210-SP	3-33	33	(2)
SS-6121220-TP	3-43	5	1
SS-6121220-TP	3-47	18	1
SS-6121220-TP	3-47	28	1
SS-6121610-SP	3-39	45	(1)
SS-6121840-SP	3-29	18	1
SS-6121860-SP	3-39	13	1
SS-6660610-TP	3-43	29	2
SS-6661110-SP	3-33	26	(2)
SS-6700710-SH	3-57	5	(1)
SS-7080510-TP	3-35	8	1
SS-7081310-SP	3-59	24	(1)
SS-7090410-SP	3-53	25	(1)
SS-7090520-TP	3-39	4	2
SS-7090520-TP	3-47	20	1
SS-7090520-TP	3-47	21	1
SS-7090620-TP	3-37	18	(2)
SS-7090710-SP	3-37	28	1
SS-7090710-SP	3-57	28	8
SS-7110410-SP	3-37	45	1
SS-7110510-SP	3-39	21	2
SS-7110720-SP	3-37	16	1
SS-7110740-TP	3-39	54	1
SS-7110830-SP	3-47	2	1
SS-7110830-SP	3-47	17	1

PART NUMBER	PAGE	DET	QTY
SS-7110830-SP			
SS-7110830-SP	3-47	22	1
SS-7110840-SP	3-59	15	(1)
SS-7111120-SP	3-39	60	(1)
SS-7120770-SH	3-39	7	1
SS-7121410-TP	3-39	58	(1)
SS-7121610-SP	3-39	48	(1)
SS-7150940-SP	3-33	19	2
SS-7681650-TP	3-33	14	(1)
SS-8090670-SP	3-29	44	(1)
SS-8110410-TP	3-35	39	(2)
SS-8110520-TP	3-43	51	1
SS-8110710-SP	3-43	9	1
SS-8150710-SP	3-29	45	1
SS-8150710-SP	3-39	36	2
SS-8151150-SP	3-33	1	1
SS-8151150-TP	3-47	7	1
SS-8151550-SP	3-33	35	(2)
SS-8152080-SP	3-47	33	2
SS-8660610-TP	3-33	15	(2)
SS-8660610-TP	3-33	23	(2)
SS-8660610-TP	3-37	26	1
SS-8660610-TP	3-39	52	(2)
SS-8660610-TP	3-39	63	(2)
SS-8660610-TP	3-43	27	2
SS-8660810-TP	3-35	14	(2)
SS-8660810-TP	3-35	16	(2)
SS-8660810-TP	3-35	19	(2)
SS-8660810-TP	3-35	21	(2)
SS-8661030-SP	3-39	66	(1)
SS-8661040-TP	3-39	67	(1)
SS-8681650-TP	3-33	16	(1)
SS-9120910-TP	3-47	48	2
SS-9121410-TP	3-47	36	(1)
TA-0850604-R0			
TA-0850604-R0	3-29	6	2
TA-0850604-R0	3-29	34	1
TA-1250406-R0	3-29	51	2
TA-1250504-R0	3-29	5	2
TA-1250705-R0	3-29	7	1
TA-2000502-R0	3-29	17	1
TA-2101002-R0	3-29	20	1
WP-0371026-SD			
WP-0371026-SD	3-47	39	(1)
WP-0450000-SD	3-43	60	(2)
WP-0450801-SD	3-33	34	(2)
WP-0450826-SC	3-59	12	2
WP-0450826-SC	3-59	30	2

e-mail: service@amfreece.cz; parts@amfreece.cz; website: www.amfreece.com
Phones: +420 582 309 146 (Service), +420 582 309 286 (Spare Parts); Fax: +420 582 360 606

INDEX

PART NUMBER	PAGE	DET	QTY
WP-0480856-SP			
WP-0480856-SP	3-39	57	(1)
WP-0480856-SP	3-47	47	2
WP-0480856-SP	3-59	29	(1)
WP-0482086-SD	3-53	29	1
WP-0501016-SD	3-29	71	1
WP-0501016-SD	3-47	41	1
WP-0501016-SD	3-59	10	1
WP-0621016-SD	3-57	35	(2)
WP-0621016-SH	3-43	36	1
WP-0650876-SD	3-37	21	1
WP-1221016-SP	3-53	5	(1)
WP-1602616-SZ	3-51	24	1
WP-1612616-SE	3-61	17	(2)
WS-0451040-KP			
WS-0451040-KP	3-55	32	1
WS-0510002-KP	3-29	72	1
WS-0651310-KP	3-55	30	1
WT-0530002-KS			
WT-0530002-KS	3-29	66	1

PART NUMBER	PAGE	DET	QTY

PART NUMBER	PAGE	DET	QTY

e-mail: service@amfreece.cz; parts@amfreece.cz; website: www.amfreece.com
Phones: +420 582 309 146 (Service), +420 582 309 286 (Spare Parts); Fax: +420 582 360 606