Instructions for service

1180i - 5

Minerva Boskovice, a.s., Sokolská 60, CZ - 680 17 Boskovice
Tel.: +420-516-453434, 453433, 494111 • Fax: +420-516-452165 • http://www.minerva-boskovice.com

www.promelectroavtomat.ru

Edition: 09/2004 Printed in Czech Republic S735 000635

CONTENTS:

1. General safety instructions 1

2. Introduction 1

3. Head of the sewing machine 2

3. 1 Hook and hook box 2

3.1.1 Description
3.1.2 Height setting of the hook
3.1.3 Setting the distance of the hook from the needle
3.1.4 Angular setting of the hook (timing)
3.1.5 Protection of the needle and of the hook point
3.1.6 Setting of the bobbin case opener
3.1.7 Setting the regulation of the hook lubrication
3.1.8 Replacement of the hook
3.1.9 Setting the gear
3.1.10 Dismantling of the hook box

3.2 Needle and thread mechanism 5

3.2.1 Description
3.2.2 To check the handwheel angular adjustment
3.2.3 Height setting of the needle bar
3.2.4 Angular setting of the pin of the thread mechanism
3.2.5 Side setting of the needle bar holder
3.2.6 Setting the needle (the needle bar holder) in the direction of sewing

3.3 Throat plate 7

3.3.1 Description
3.3.2 Mounting and removing the throat plate and its insert
3.3.3 Setting the throat plate and its insert

3.4 Thread tensioners and limiter 8

3.4.1 Description
3.4.2 Setting the tension of main and auxiliary tensioners
3.4.3 Setting the tensioning mechanisms of the main tensioners
3.4.4 Setting the adapting spring
3.4.5 Setting the thread limiter

3.5 Feeding mechanism of the needle feed and of the lower feed wheel 10

3.5.1 Description
3.5.2 Stitch length mechanism
3.5.2.1 Setting the upper eccentric
3.5.2.2 Setting the prop
3.5.2.3 a Forward and rearward stitch length distribution (rough)
3.5.2.3 b Forward and rearward stitch length distribution (fine)
3.5.2.4 Setting of the control knob (including the stitch length limitation)
3.5.3 Lower feed wheel
3.5.3.1 Feeding clutches
3.5.3.1.1 Description
3.5.3.1.2 Setting the lever of the second step of feeding(angle, position)
3.5.3.1.3 Setting of the lower eccentric
3.5.3.1.4 Setting the engagement and disengagement of the clutches
3.5.3.2 Wheel feeder and its post
3.5.3.2.1 Height setting of the feeder
3.5.3.2.2 Replacement of the feeder
3.5.4 Setting the top roller (pressing force, height)

3.6 Feeding mechanism of the top roller 15

3.6.1 Description
3.6.2 Side setting of the indented lower pulley
3.6.3 Side setting of the indented upper pulley
3.6.4 Setting the tensioning roller
3.6.5 Replacement of the indented belt

www.promelectroavtomat.ru

3.6.6 Top roller
3.6.6.1 Selection of the top roller diameter
3.6.6.2 Forward, rearward and side setting
3.6.6.3 Setting the gear clearance and in the mounting of the top roller
3.6.6.4 Replacement of the top roller

3.7 Setting the presser foot lift 18

3.8 Bobbin winder …. 19
3.8.1 Description
3.8.2 Setting the bobbin winder stop
3.8.3 Setting the friction gear

3.9 Safety clutch 20
3.9.1 Description
3.9.2 Setting the disengaging moment

3.10 Indented belt transmission 20
3.10.1 Setting the tensioning roller of the indented belt
3.10.2 Replacing the indented belt

3.11 V-belt, motor - head 21
3.11.1 Tensioning
3.11.2 Replacing the V-Belt

3.12 Driving toothed belt 21
3.12.1 To exchange the driving toothed belt

3.13 Lubrication 22
3.13.1 Description
3.13.2 Refilling oil
3.13.3 Multiple oil use

4. Thread trimming 23
4.1 Description of the trimming mechanism
4.2 Setting the pickup roller
4.3 Setting the cam
4.4 Setting the fork
4.5 Setting the moving knife
4.6 Setting the fixed knife
4.7 Setting the retaining spring of the hook thread
4.8 Setting switching of the electromagnets

5. Lifting the top roller by electromagnet 25
5.1 Description
5.2 Setting the electromagnet pin
5.3 Setting the electromagnet current
5.4 Assembly of the top roller lifting electromagnet

6. Backtacking using electromagnet 26
6.1 Description
6.2 Electromagnet height setting
6.3 Setting the position of push-buttons
6.4 Change of the function of push-buttons

7. Connecting the electric elements on the machine head 27

8. Drive, control panel, position sensor 27

9. Maintenance (table of operations) 28

10. Setting the machine according to the sewing category 28
10.1 Introduction
10.2 Table of setting the machine according to the sewing category

www.promelectroavtomat.ru

1. General safety instructions

The non-observance of the following safety instructions can cause bodily injuries or damages to the machine.

1. The machine must only be commissioned in full knowledge of the instruction book and operated by persons with appropriate training.
2. Before putting into service also read the safety rules and instructions of the motor supplier.
3. The machine must be used only for the purpose intended. Use of the machine without the safety devices is not permitted. Observe all the relevant safety regulations.
4. When gauge parts are exchanged (e.g. needle, top roller, needle plate, feed dog and bobbin) when treading, when the workplace is left, and during service work, the machine must be disconnected from the mains by switching off the master switch or disconnecting the mains plug.
5. Daily servicing work must be carried out only by appropriately trained persons.
6. Repairs, conversion and special maintenance work must only be carried out by technicians or persons with appropriate training.
7. For service or repair work on pneumatic systems the machine must be disconnected from the compressed air supply system. Exceptions to this are only adjustments and function checks made by appropriately trained technicians.
8. Work on the electrical equipment must be carried out only by electricians or appropriately trained persons.
9. Work on parts and systems under electric current is not permitted, except as specified in regulations DIN VDE 0105.
10. Conversions or changes to the machine must be authorized by us and made only in adherence to all safety regulations.
11. For repairs, only replacement parts approved by us must be used.
12. Commissioning of the sewing head is prohibited until such time as the entire sewing unit is found to comply with EC directives.



It is absolutely necessary to respect the safety instructions marked by these signs.
Danger of bodily injuries !
Please note also the general safety instructions.

IMPORTANT WARNING

In spite of all safety measures made on the machines, inappropriate actions of the operator may lead to dangerous situations. In industrial sewing machines, attention should be paid to the following still remaining possible sources of injury:

1. Moving sewing needle
   - risk of injury when sewing with raised pressure foot or top roller, because the finger guard is then positioned too high,
   - risk of injury when inadvertently threading down of the motor threadle.
2. Moving thread take-up lever
   - risk of injury when inadvertently or intentionally inserting the finger(s) between the thread take-up lever and its guard.
3. Moving pressure member
   - risk of injury when holding sewn work in immediate vicinity of the pressure member and beginning to insert under the pressure member a considerably thicker sewn work portion,
   - risk of injury when sinking the pressure member.
4. When switched off, the clutch motor slows down by inertia but would be reactivated by an accidental treading down of the motor treadle. To avoid such risk, it is advised to hold the handwheel by hand and slightly to depress the motor treadle.

2. Introduction

This service book contains instruction for regulating the mechanisms of the sewing machine head.

The instructions for use and for putting the machine into operation and for the control of the stopmotor are not included in this service book, but they are supplied as separate publications.

This service book is universal for all subclasses of the machine - it contains setting procedures for all elements which may be placed on the machine of the given class. When the supplied subclass of this machine does not include some element, then it is possible to leave out the respective parts of the instructions. The optional equipments of the machine and the respective configurations of the subclasses of the machine are given in the operating instructions.

This sewing machine disposes of a large extent of its use. The machine should be set with respect to the parameters of the sewn material, the sewing thread etc. The setting for the individual categories is given in the chapter 11.2.

For setting the machine, simple setting aids are used which are included in the accessory of the machine. Besides these aids, universal measuring devices are used, such as slide calliper, feeler gauges and dynamometer for measuring the thread tension.

www.promelectroavtomat.ru

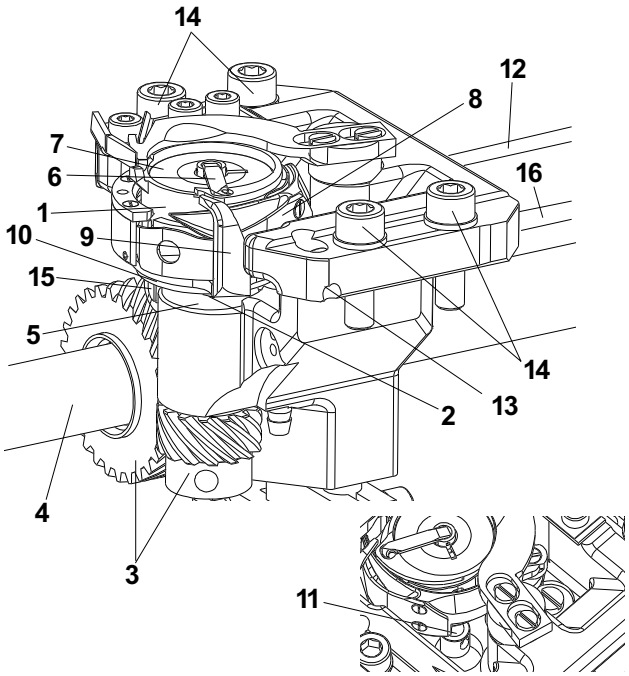

3. Head of the sewing machine

3.1 Hook and the hook box

3.1.1 Description

The hook (1) is mounted on the shaft (2) and is driven by the gear (3) from the shaft (4).
The shaft of the hook (2) is mounted on the top in a sliding bearing and, on the bottom, in a needle bearing.
The hook is provided with a lever (6) which is tilted when removing the bobbin (7). The protecting sheet (8) protects against the collision of the needle with the hook point. The bobbin case opener (9) is driven by the eccentric (10) on the shaft (2).
The lubricating tube (11), on which a lubricating wick is fastened in the tube (12), feeds oil for lubricating the sliding bearing (5) of the eccentric (10) and the hook path.
The screws (13) serve for taking up the clearance of the gear.
The screws (14) fasten the hook box to the bedplate.
The lubricating felt (15) is connected by the wick (16) with the main lubricating system and serves for lubricating the gear (3).

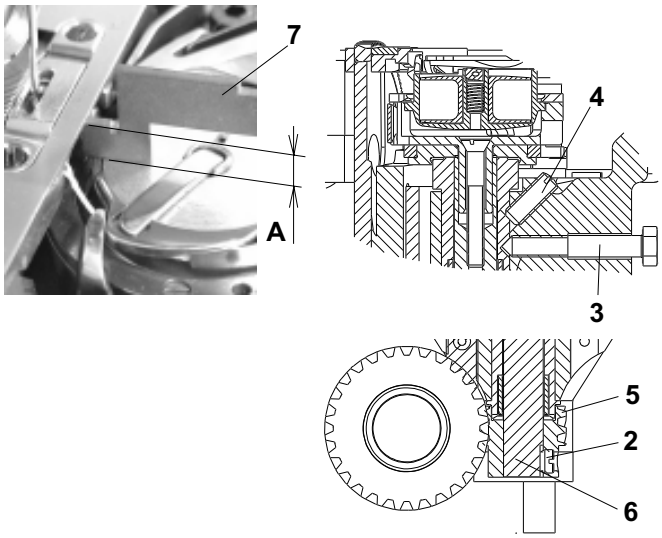

3.1.2 Height setting of the hook

The designated distance „A“ should be 5.3 mm.

Caution! Danger of injury!
Switch off the main switch ! Before starting the setting operation, wait until the motor stops!

- Remove the slide plate (1).
- Loosen both screws (2).
- By turning the screws (3 and 4), set the required distance„A“. After having set it, tighten carefully the screws. For setting up use the setting gauge (7) as per the repective figure.
- By axial shifting of the gear wheel (5), set the axial clearance in such a way that this clearance is the least possible, but sufficient for turning easily the hook.
- Tighten carefully the screws (2). Caution ! One of these screws must bear on the flat of the shaft 6).

3.1.3 Setting the distance of the hook from the needle

The hook point (1) is set up to the maximum distance of 0.1 mm from the bottom of the needle recess (2). For the sewing categories 1 and 2, the needle size 100 is set, for the sewing categories 3 and 4, it is the needle size 160.

Caution! Danger of injury!
Switch off the main switch ! Before starting the setting operation, wait until the motor stops!

- Shift the plate (3).
- Loosen only one screw (4).
- Loosen the screws (5) and tighten them only slightly.
- Shift the hook box (6) at the determined distance between the needle and the hook point.
- Tighten the screw (4).
- Tighten duly the screws (5).
- Check up the setting with magnifying glass and proceed to the eventual correction of setting.

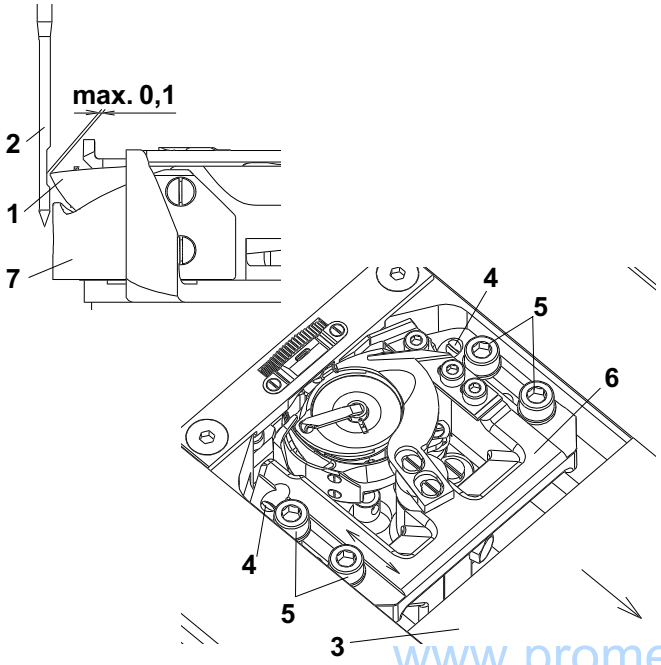

Caution!
When changing substantially the sewing category, the protecting sheet of the hook (7) should be set up.

www.promelectroavtomat.ru

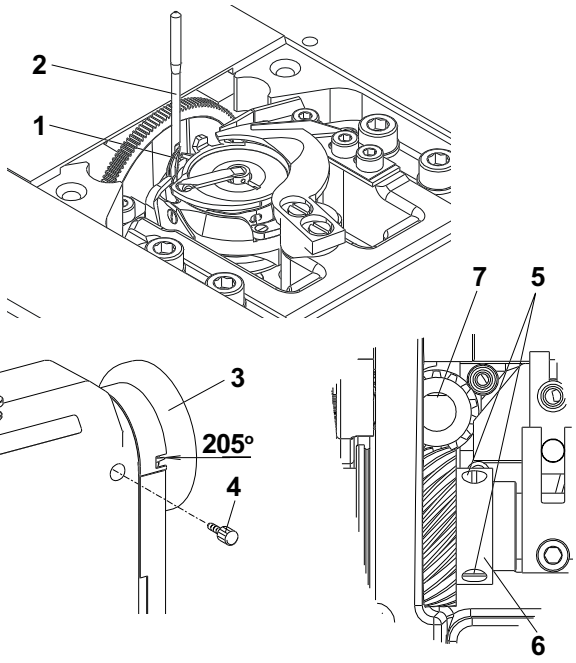

3.1.4 Angular setting of the hook (timing)

The hook is to be angularly set in such a way that the hook point (1) is opposite the needle at the moment, when the needle shifts by 2.5 mm from its bottom dead center. This corresponds to the 205° on the scale of the handwheel (3).

Caution! Danger of injury!
Switch off the main switch! Before starting the setting operation, wait until the motor stops!

- Remove the throat plate.
- Turn the handwheel (3) to the 205° and fix it with the screw (4) which is component part ot the accessory of the machine (tighten it carefully).
- Loosen the screws (5) of wheel (6).
- Turn the hook into the required position.
- Set the gearing of the wheel (6) at the centre of the wheel (7).
- Tighten to the maximum the screws (5).

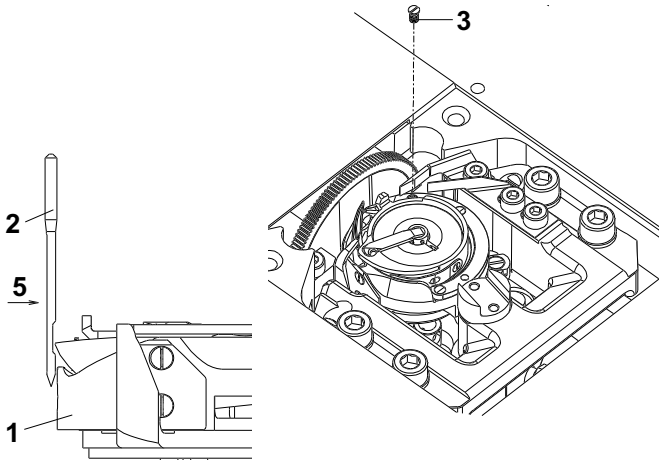

3.1.5 Protection of the needle and of the hook point

The protecting sheet (1) is to be set up in such a way that the clearance between the protecting sheet and the needle (2) is the least possible.

Caution ! Danger of injury!
Switch off the main switch! Before starting the setting operation, wait until the motor stops!

- Remove the throat plate and the movable trimming knife.
- Unscrew the screw (3).
- Put the screwdriver into the hole of the screw (3) and, using the regulating screw, set up the required clearance between the needle (2) and the protecting sheet (1). When turning to the right, the protecting sheet shifts out from the groowe and inversely.
- Check up the protecting effect in pushing against the needle in The sense of the arrow (5). The hook point must not catch the needle. If so, set up the protecting effect, correct eventually the setting of the distance of the hook point from the needle according to the paragraph 3.1.3.
- Screw in the screw (3).

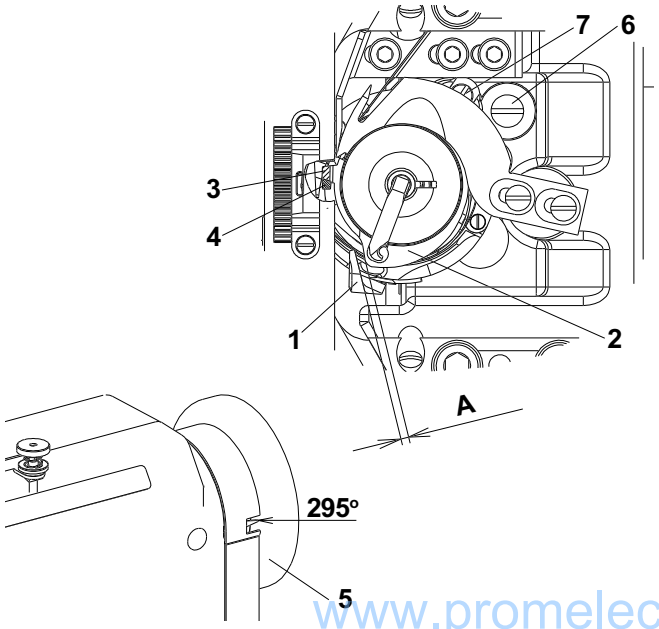

3.1.6 Setting of the bobbin case opener

The bobbin case opener (1) is to be set in such a way that, at the moment when the opener is in its dead centre, there would be a clearance „A“ between the opener (1) and the projection (2), whereas the finger (3) bears on the projection (4), „A“ = 0.7 mm for the sewing category 1 and 2, „A“ = 0.3 mm for the sewing category 3 and 4.

Caution ! Danger of injury!
Switch off the main switch! Before starting the setting operation, wait until the motor stops!

- Remove the slide plate.
- On the handwheel (5), set the angle of 295° (the hook is in its dead centre).
- Loosen the screw (6).
- Turn the eccentric (7) in such a way that the required clearance between the elements (1) and (2) is attained.
- Tighten duly the screw (6).

www.promelectroavtomat.ru

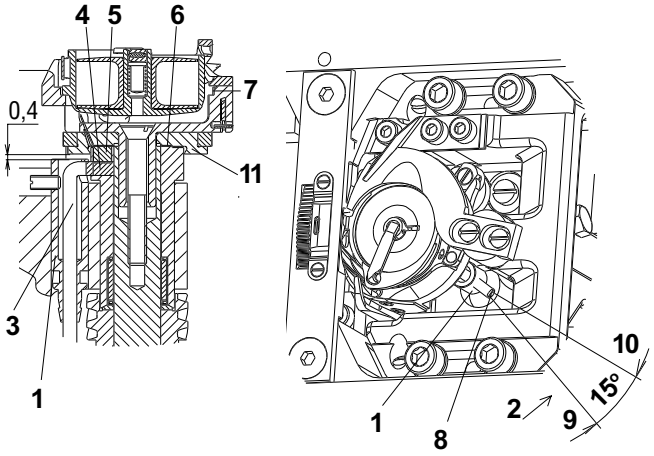

3.1.7 Setting the regulation of the hook lubrication

By turning the lubricating tube (1) in the sense of the arrow (2), the size of the contacting surface between the wick (3) and the felt insert (4) is regulated. In this way, the speed of the capillary lift of oil into the felt insert (5) is influenced, from which oil is wiped on the surface (6) and is driven by centrifugal force into the hook path (7).

Setting of full lubrication

- Turn the screw (8) into the position (9).

Setting of limited lubrication

- Turn the screw (8) into the position (10).

After having ended the regulation, set the height of the lubricating tube (1) at 0.4 mm from the eccentric (11).

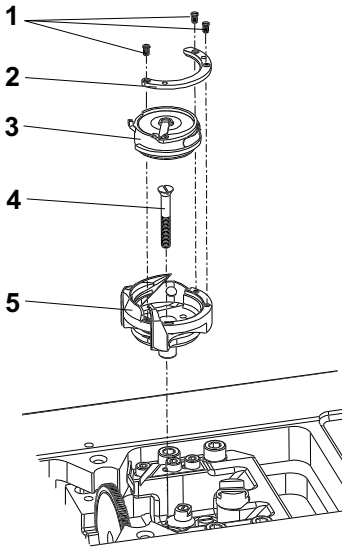

3.1.8 Replacement of the hook



Caution! Danger of injury!
Switch off the main switch ! Before starting the setting operation, weit until the motor stops!

- Remove the throat plate and the trimming knife.
- Unscrew the screws (1) and remove the gib (2).
- After having suitably turned a bit the hook, remove the bobbin case (3).
- Unscrew thorougly the screw (4).
- Remove the body of the hook (5) upwards.
- When mounting, the procedure is inverse.

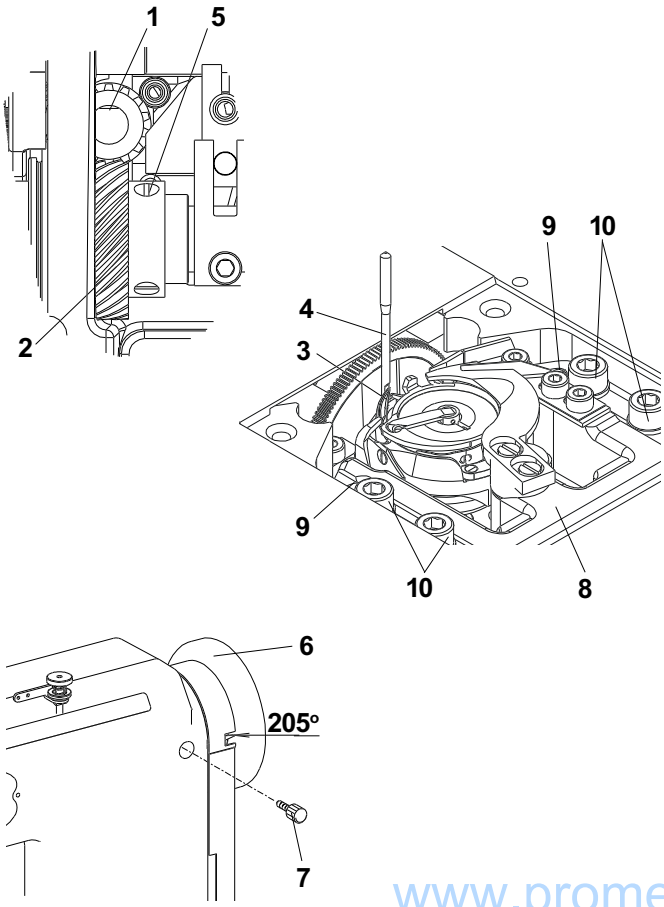

3.1.9 Setting the gear

The mutual angular orientation of the gear wheel (1) relative to the gear wheel (2) should ensure the accessibility of the screw (5) at the moment when the hook point comes to lie opposite the needle (4). The wheel (2) is to be set with its gear rim symmetrically to the centre of the gear wheel (1). The clearance between the gear wheels is to be the least possible.



Caution ! Danger of injury!
Switch off the main switch! Before starting the setting operation, wait until the motor stops!

- Set the angle of 205° on the handwheel (6) and lock it with the screw (7).
- Remove box of the hook (8), according to the paragraph 3.1.10, the hook point (3) is to be turned a bit according to the illustration.
- Turn the gear wheel (2) into the suitable position and insert the box of the hook into the machine. Check up, whether the screw (5) is accessible and, if not, repeat the procedure.
- Set the the distance of the hook from the needle according to the paragraph 3.1.3.
- Set the precise angular displacement of the hook according to the paragraph 3.1.4.
- The screws (10) tighten slightly.
- Set the clearance in the gear in turning the screws (9). Check up, whether the gear has a clearance during the whole revolution of the hook. Turn the handwheel step by step by 15° and, with each step, grasp the hook and try, if there is an angular dead travel. Tighten carefully the screws (9).
- Tighten duly the screws (10) and try anew the clearance of the gear.

www.promelectroavtomat.ru

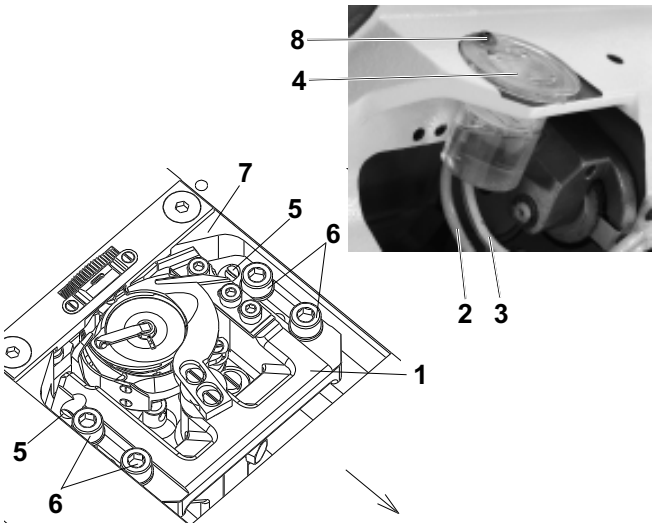

3.1.10 Dismantling of the hook box

When dismantling the box (1), the supplies of lubricating oil are to be disconnected first, the fastening screws unscrewed and, thereafter, the box is removed.

Caution ! Danger of injury!
Switch off the main switch! Before starting the setting operation, wait until the motor stops!

- Unscrew the screws (8) from the oil tank (4) and pull the box out from the bedplate (7).
- Disconnect the lubricating tubes with the wicks (2) and (3) from the oil tank (4).
- Loosen only one screw (5).
- Unscrew the screws (6).
- Shift the hook box in the sense of the arrow and remove it out from the machine.
- When mounting it, proceed inversely.

3.2 Needle and thread mechanism

3.2.1 Description

The take-up lever (1) is mounted in ball bearings, both at the spot of its suspending on the connecting rod (2) and in the mounting on the loop (12). The take-up lever is of aluminum and is provided with a stuck-in eye for two threads. The connecting rod (2) is mounted on the eccentric pin (3), by means of which the thread mechanism is adjusted according to the category of stitching. The needle rod holder (4) is mounted through the pivot (5) in a rotating way in the arm (6). In its top part, the holder is guided by the guide pin (7). The movement for the needle feed is given to it by the connecting rod (8) driven by the feeding shaft (9). The connecting rod (8) is mounted by pin (13) with needle bar holder (4).
The connecting rod (10) of the needle bar (11) on the loop (12) is mounted in a ball bearing and it is slidingly mounted on the needle bar carrier. The mechanism is lubricated by means of a central-wick lubricating system.

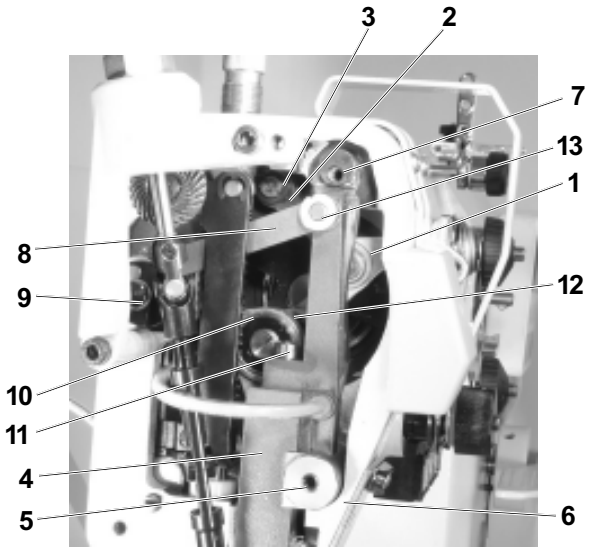

3.2.2 To check the handwheel angular adjustment

The handwheel (5) must be situated in its precise position relative to the needle and thread mechanism. This position is given by a pin (2), which locks the connecting rod of the needle rod (1) through a hole in the arm (3). In this position, the indicator (6) of the handwheel must show „0“. The position is fixed by the handwheel screw (4) contacting a small flat surface provided on the upper shaft.
The correct adjustment of the angular position has been carried out at the producer‘s.

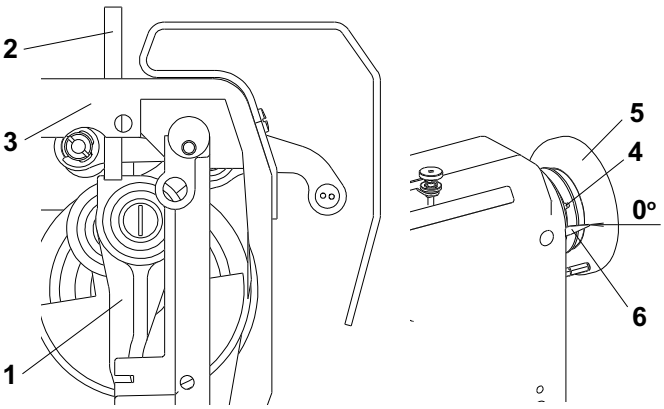

Caution ! Danger of injury!
Switch off the main switch! Before starting the setting operation, wait until the motor stops!

3.2.3 Height setting of the needle bar

At the moment, when the hook point passes around the needle, the upper edge of the needle eye must be about 1 mm below the hook point. In an opposite case, it is necessary to set the height of the needle bar as follows:

Caution ! Danger of injury!
Switch off the main switch! Before starting the setting operation, wait until the motor stops!

- Remove the front guard.
- Loosen the screw (1) of the needle bar carrier
- Set the correct height of the needle bar and tighten anew the screw (1).

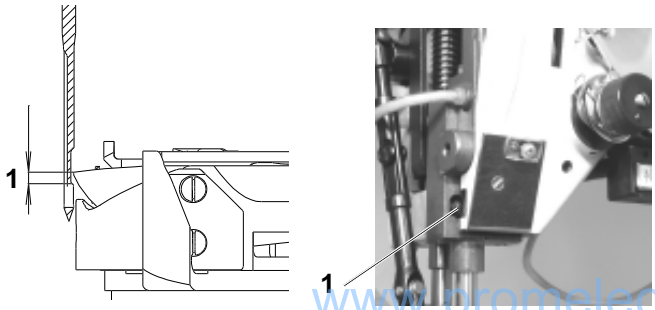

Caution !
An incorrect setting of the needle bar height may cause the striking of the hook point against the needle.

www.promelectroavtomat.ru

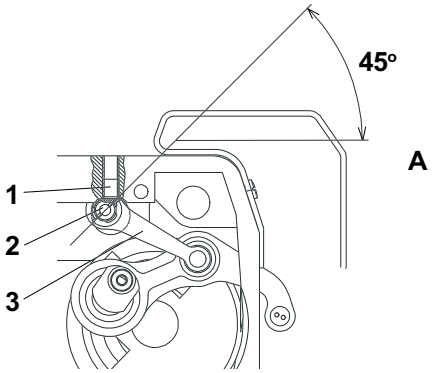

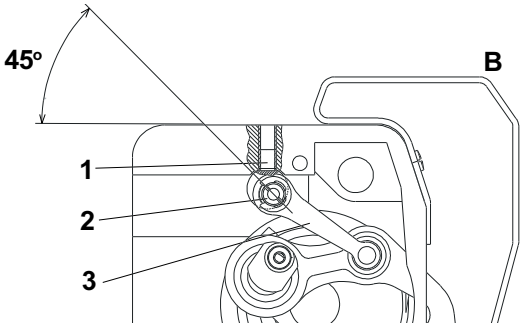

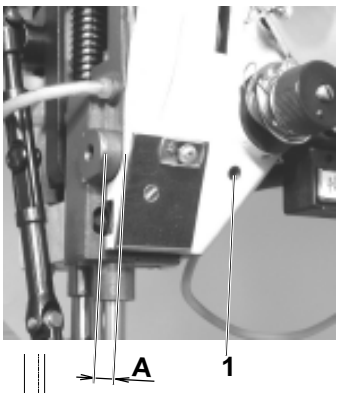

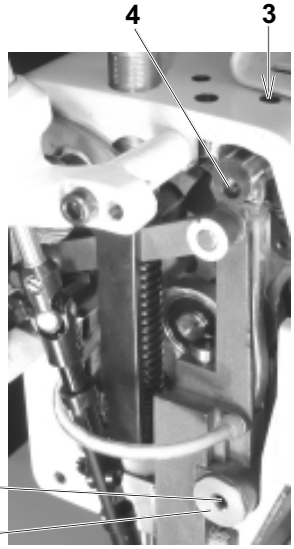

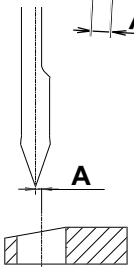

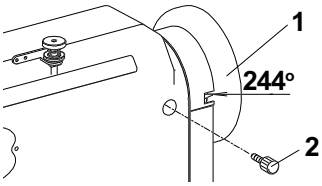

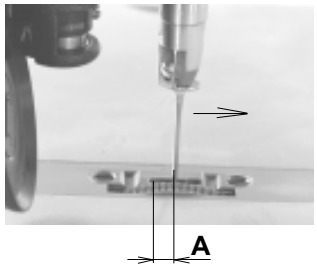

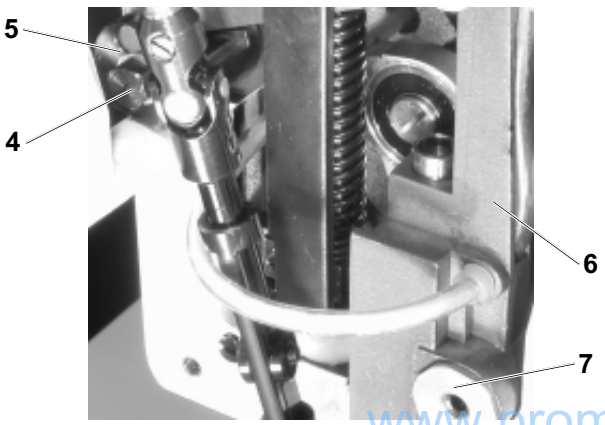

3.2.4 Angular setting the pin of the thread mechanism

The hinged pin (2) of the connecting rod (3) can be set in two positions:

- for stitching category 100, 200, 300 - the groove of the pin (2) is in position (turned) as shown in Fig. “A”
- for stitching category 400 - the groove of the pin (2) is in position (turned) as shown in Fig. “B”.

Set the connecting rod pin as follows:

Caution! Danger of injury!
Switch off the main switch! Before starting the setting operation, wait until the motor stops!

- Remove the front guard.
- Loosen the screw /imbus/ (1) of the connecting rod (3) pin (2).
- Set the pin into the corresponding position and tighten anew the screw.
- The correct position is given by the flat on the pin (2), on which the screw (1) is tightened.
- After having tightened the screw (1) check the axial clearance of the connecting rod (3).

3.2.5 Side setting of the needle bar holder

In the correct position of the needle bar holder, the distance „A“ between the needle axis on the left side and the axis of the aperture in the throat plate is 0,1 mm.

Caution! Danger of injury!
Switch off the main switch! Before starting the setting operation, wait until the motor stops!

- Loosen the screw (1) of the pin (2).
- Loosen the screw (3) of the guide pin (4).
- In shifting the pin (2) set the needle bar holder on the measure „A“ = 0.1 mm /at the same time the pin (4) shifts.
- The guide pin (4) is to be set in such a way that the needle bar holder moves easily.
- Tighten the screws (1 and 3).

3.2.6 Setting the needle (the needle bar holder) in the direction of sewing

When shifting out the needle from the throat plate insert, at the moment, when the needle eye is at the level of the top surface of the throat plate insert, the distance between the needle and the wall of the throat plate insert must be „A“ = 0.2 mm.

Caution ! Danger of injury!
Switch off the main switch! Before starting the setting operation, wait until the motor stops!

- Shift the insert (3) up to the stop in the sense of the arrow.
- Set the maximum allowed stitch length.
- Set the handwheel (1) to the angle of 244° and lock it with the screw (2).
- Loosen the screw (4) of the lever (5).
- By turning the needle bar holder (6) on the pin (7) set the required distance “A” = 0,2 mm.
- Tighten up the screw (4) and check up the setting.

Caution!
A faulty setting may cause bending or breaking of needles against the throat plate insert.

www.promelectroavtomat.ru

3.3 Throat plate

3.3.1 Description

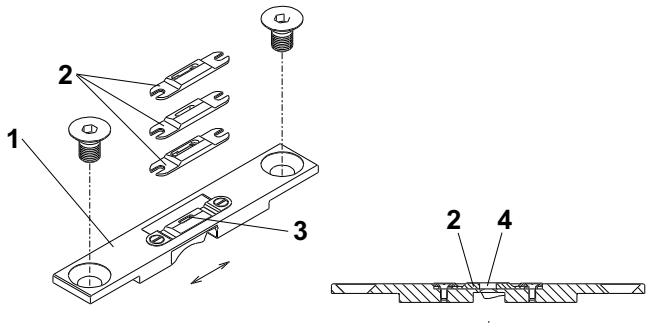

The throat plate (1) is universal for all categories of sewing. In the throat plate there is mounted an exchangeable insert (2). The machine is supplied with several types of inserts differing in the width of their needle aperture (3), see tab. in the par. 11.2).

For ensuring a good function of the thread trimming device, the insert can be set in various positions in the sense of arrows in such a way that the rear edge of the hole in the throat plate (4) prevents unthreading the thread from the sewn material when forming the first stitches at the beginning of the seam.

3.3.2 Mounting and removing the throat plate and its insert

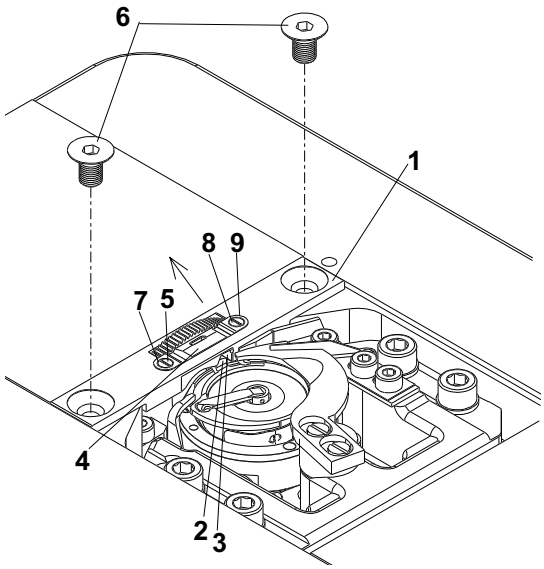

When mounting the throat plate (1), the finger (2) must engage into the recess (3). To remove the throat plate insert (4), screw out the screw (5), take out the washer (7), loosen the screw (8), and remove the inlay (4) by oblique upward movement shown by the arrow.

Caution! Danger of injury!
Switch off the main switch! Before starting the setting operation, wait until the motor stops!

- Turn the finger (2) in the sense towards the throat plate (1).
- Mount the throat plate (1).
- Screw in the screws (6).
- Slide in the insert under the washer (9) in the oblique rearward sense (4).
- Mount the insert (7) and screw in the screw (5).
- Tighten the screw (8).
- When removing the insert, proceed in an inverse sequence.

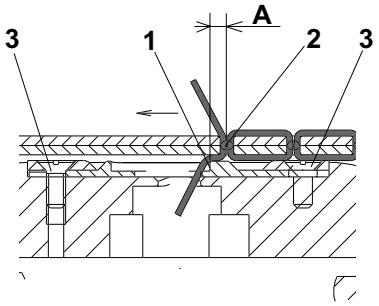

3.3.3 Setting the throat plate and its insert

The insert of the throat plate should be set in the machines with the trimming device in such a way that the edge (1) is at the distance „A“ = 1 to 2 mm before the spot of interlacing of the threads (2). For the stitches up to the length of 2/3 of the maximum length, the insert is to be set in its extreme front position in the sense of the arrow. For long stitches, it should be in its extreme rear position, against the sense of the arrow. With the machines without the trimming device, the insert is in its extreme rear position.

Caution! Danger of injury!
Switch off the main switch! Before starting the setting operation, wait until the motor stops!

- Loosen the screws (3).
- By applying a heavy pressure of the screwdriver, shift the insert in its required position.
- Tighten the screws (3).

www.promelectroavtomat.ru



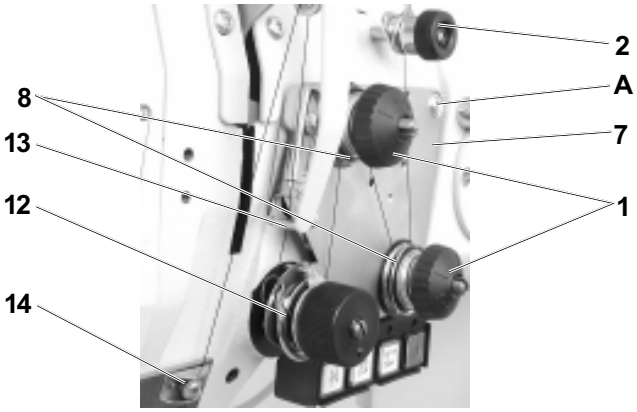

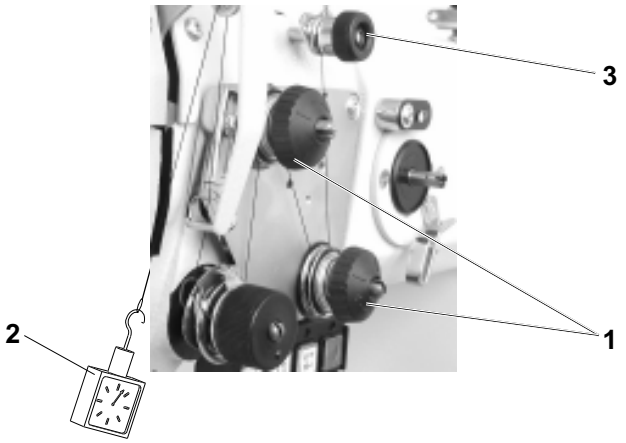

3.4 Thread tensioners and limiter

3.4.1 Description

The main tensioners (1) serves for creating the tension of the thread when tightening the stitch. The auxiliary tensioner (2) reduces the risk of pulling out of the thread after the thread trimming when removing the sewn material, when the thread is passed through this material and when the main tensioner is relieved. The main tensioner is relieved by the mechanism controlled by the shaft of the presser bar lifting (3) holding the lever (4) with a pulley. The motion is then transmitted by the lever (5) and the tie rod (6) on the thread tensioner plate (7) whose displacement (motion) relieves the thread tensioner springs (8). In machines provided with a thread trimming device, the main tensioners (1) are relieved as well upon the switching on of the electromagnet (10) whose electromagnetic field will attract the thread tensioner plate (7). The mechanism of the adapting spring (12) maintains the upper thread in its tensioned state when passing through the hook and when entering the needle into the sewn material. The thread limiter (13) limits the length of the thread fed by the take-up lever when moving from the upper to the bottom dead centre to get a controlled passing of the thread through the hook. The auxiliary guide (14) maintains the upper thread in front of the needle in a tensioned condition and helps against pulling the thread from the needle after thread trimming.

3.4.2 Setting the tension of the main and auxiliary tensioners

The tension of the main thread tensioners is regulated by means of the nuts (1). The force of tensioning the thread is measured by the dynamometer (2) as it is shown on the illustration. The size of this force differs according to the category, and its orientation value is indicated in the par. 11.2. The tension of the auxiliary tensioner is regulated using the nut (3). It should be the least possible, but sufficient for unthreading the thread from the sewn material when removing the sewn material from the pressing element without leaving the tensioner.

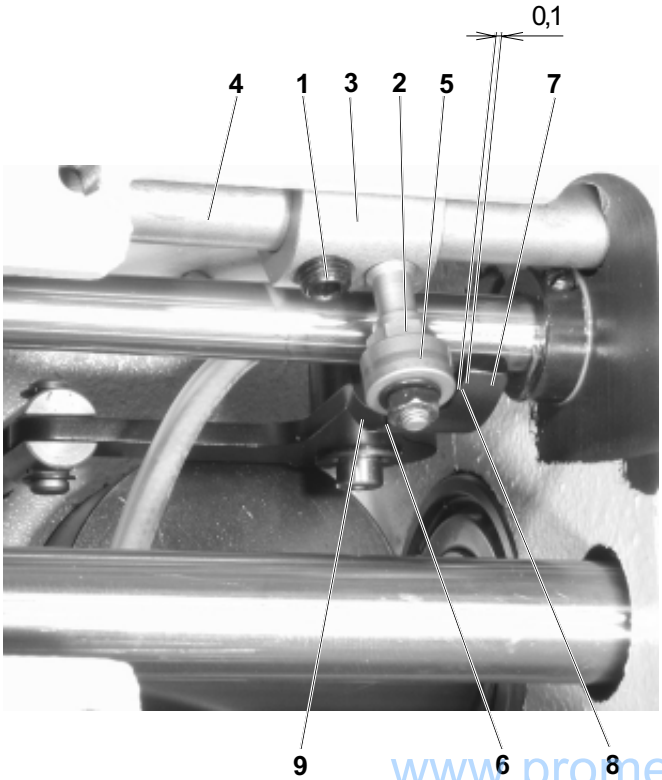

3.4.3 Setting the tensioning mechanisms of the main tensioners

In the rest position of the tensioners, when pushing the plate of the tensioners on the spot “A” 3.4.1, this plate must have the socalled dead travel of about 0,5 mm. At this lifting, the tension discs of the tensioners must not be relieved. This can be attained by a suitable shaping of the relieving disc of the tensioners - this has been set up in the manufacturing factory. In the maximum opened position of the tensioners, the plate of the tensioners, when pushing it at the spot “A” 3.4.1, must still have the minimum lifting. This can be attained when axially shifting the lever (3) with the roller (5) on the shaft (4).
The disengagement of the main tensioners must be coordinated with the top roller lift. To achieve this, turn the lever (3) with the roller (5) on the shaft (4). The movement of the roller (5) on the slanting surface (6) of the lever (7) disengages the tensioners. In this way, also a lag of the upper thread tension disengagement after the top roller lift can be obtained.

Caution ! Danger of injury!
Switch off the main switch! Before starting the setting operation, wait until the motor stops!

- Remove the rear cover with the top roller lift magnet.
- Loosen the screws (1) and (2) of the lever (3).

www.promelectroavtomat.ru

- In the rest state of the machine (with not relieved tensioner discs) set the lever (3) in turning it slightly on the shaft (4) to a position in which the roller (5) of the lever (3) is in contact with the slanting surface (6) of the lever (7) and is about 0.1 mm distant from the flat surface (8) of the lever.
- At the maximum lift of the top roller, the roller (5) moves on the flat surface (9) of the lever (7); in this condition, there must be a minimal play at the tensioner plate lift (when pushing qat the spot “A” (3.4.1), the plate must still have a minimum lifting - between the roller (5) and the surface (9) there is a minimum clearance). Retighten the screws (1) and (2), check the play, and correct it in case of need.

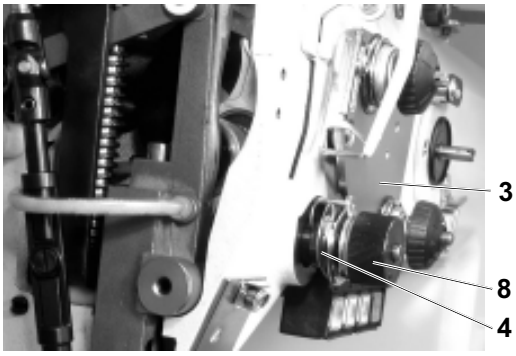

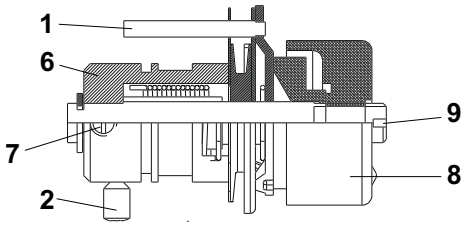

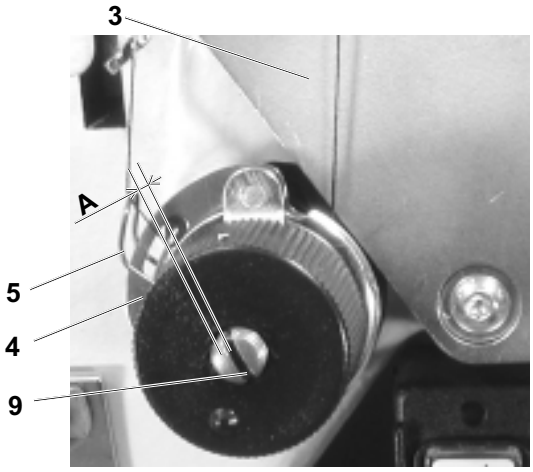

3.4.4 Setting the adapting spring

The mechanism of the adapting spring is in the machine arm set by the pin (1) and fixed by the screw (2). The axial adjustment shall ensure that the surfaces of the parts (3) and (4) are aligned (the threaded thread must in no place break on edges). The initial position of the adapting spring (5) shall ensure that “B” = 1 to 1.5 mm (see the Figure).

Caution! Danger of injury!
Switch off the main switch! Before starting the setting operation, wait until the motor stops!

- Loosen the screw (2) and take the mechanism out of the machine arm.
- Turning the body (6) relative to the pin (1), set the required initial position of the adapting spring /the screw (7) has been set at the producer´s so as to permit the turning movement of the body (6) the screw must not be fully tightened/.
- During the installation of the mechanism into the machine arm take care of the axial adjustment of the mechanism.
- Retighten the screw (2) and check the adjustment.
- Loosen the nut (8) of the mechanism, insert a screwdriver into the notch of the screw (9) and set the required value of the adapting spring. By turning the screw clockwise you increase the spring force, and vice versa.
- Retighten the nut (8) and check the function of the adapting spring.

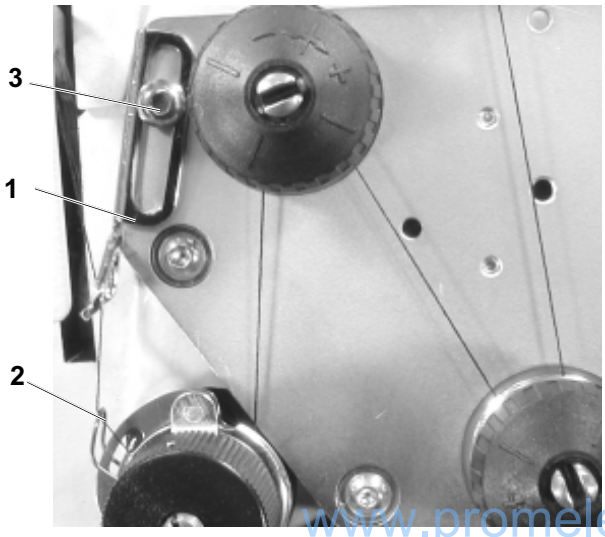

3.4.5 Setting the thread limiter

The thread limiter is to be set in such a way that, when sewing and passing the thread through the most distant point of the hook, the spring (2) shifts by about 1/4 to 1/2 length of its total length. This means that the thicker will be the sewn material and the longer will be the stitch length, the more will be the limiter shifted in the sense of the arrow and inversely. Under standard sewing conditions, the thread limiter is set in its tested positions depending on the sewing category in accordance with the chapter 11.

Caution! Danger of injury!
Switch off the main switch! Before starting the setting operation, wait until the motor stops!

- Tighten the screw (3).
- Set the thread limiter (1) so as to ensure a minimum motion of the adapting spring (2) when the thread passes around the bottom of the hook.
- Tighten the screw (3).

www.promelectroavtomat.ru

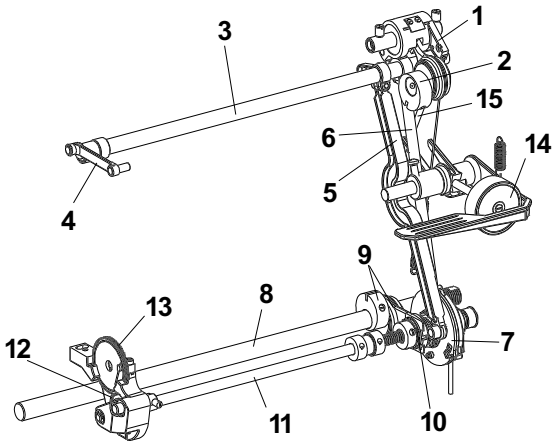

3.5 Feeding mechanism of the needle feed and of the lower feed wheel

3.5.1 Description

The feeding mechanism is formed by the leverage (1) which is driven from the main shaft through the eccentric with connection rod (2). The feeding motion is transmitted by the shaft (3) on the clutch of the bottom feed (7). The engaging and the disengaging function of the clutch (7) is controlled from the lower shaft (8) through the eccentric with the connecting rod (9) and through the wedge coupling (10).
The feeding movement is transmitted by the shaft (11) through the gear transmission (12) onto the wheel feeder (13).
The stitch length is set by the knob (14) through the leverage (15) to the feeding mechanism (1).

3.5.2 Stitch length mechanism

3.5.2.1 Setting the upper eccentric

The eccentric (1) must be set in its angular position in such a way that the horizontal component of the needle motion is in a phase delay from the vertical component of this movement. This refers to the angle of 90° on the handwheel (2), when the setting stick (3) is engaged into the eccentric (1) and leans from above against the feeding shaft (4).

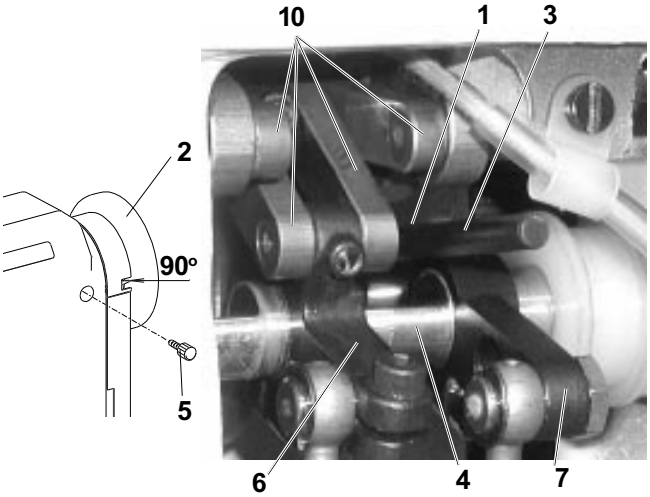

Caution! Danger of injury!
Switch off the main switch! Before starting the setting operation, wait until the motor stops!

- Set the angle 90° on the handwheel (2) and fix it with the screw (5) which is component part of the accessory of the machine (tighten it with care).
- Loosen the gripping joints of the levers (6) and (7).
- Turn the feeding shaft (4) in such a way, so that the recesses (flats) point towards the bedplate (owing to the unambi-guous setting of the eccentric by means of the setting bar).
- Insert the setting bar (3) into the hole in the eccentric (1) and prop it from above against the feeding shaft (4).
- Shift axially the eccentric (1) on the shaft into its extreme positions and place it in the middle.
- Tighten the screws of the eccentric (1) to the maximum (one screw first and, after having turned slightly the hand-wheel, the second screw as well).
- Turn the feeding shaft (4) back into the position for setting the leverage in such a way, so that the levers (10) of the mechanism pass in the spots of the recesses.
- Tighten the gripping joints of the levers (6) and (7).
- Test the sufficient clearance in the recesses of the feeding shaft (4) and, using the levers (10) with the maximum stitch length forward and rearward – push against the reverse stitching lever.
- Correct eventually the position of the feeding shaft.

3.5.2.2 Setting the prop

In this machine with a wheel feed, the prop (1) is mounted in the pits (A and C) as per the drawing.

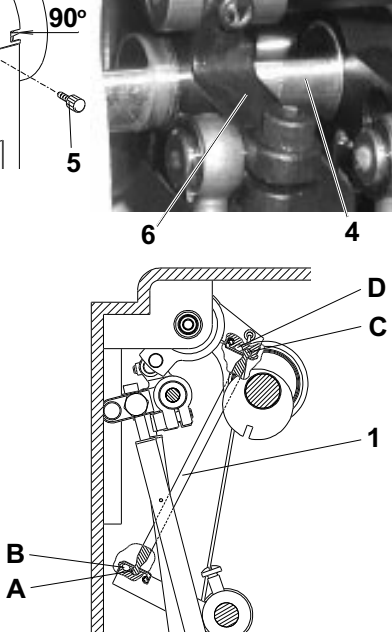

3.5.2.3a Forward and rearward stitch length distribution (rough)

The cam (1) is to be set at the respective angle in such a way that the stirrup (6) is oriented in such a position, so that the connecting rods (7 and 8) are in a line with a thoroughly screwed in knob (9) and with turning the handwheel at 0°. This setting can be done only after having set the top eccentric according to the paragraph 3.5.2.1.

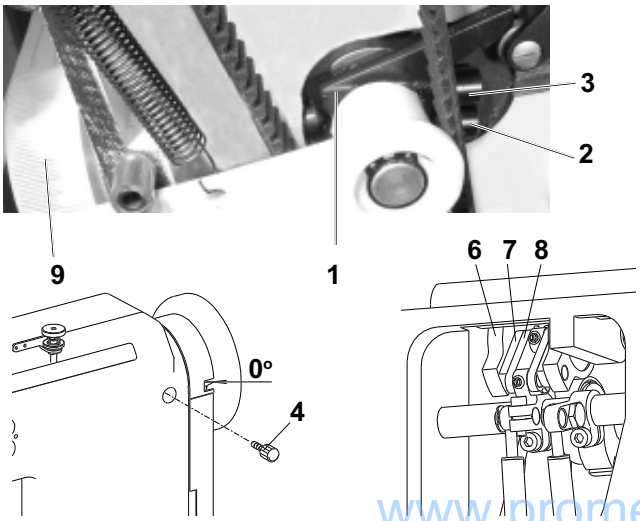

Caution! Danger of injury!
Switch off the main switch! Before starting the setting operation, wait until the motor stops!

- Set the zero stitch /screw in the knob (9) to the bottom of the cam (1)/.
- Set the angle 0° on the handwheel and lock it with the screw (4).
- Turn the screw (3) in the respective sense in such a way that the connecting rods (7 and 8) are in a line and tighten the screw (2).

www.promelectroautomat.ru

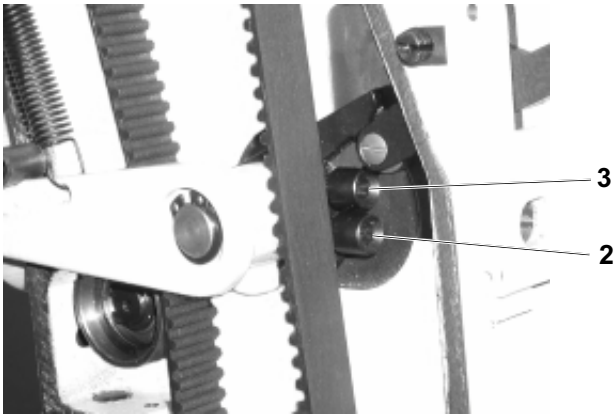

3.5.2.3b Forward and rearward stitch length distribution (fine)

When setting the maximum length of the stitch, the forward and the rearward stitch length must be equal with the maximum error of ± 5 %. This setting can be done only after having set the needle bar holder in the direction of sewing (par. 3.2.6) and the wheel feed (par. 3.5.3.1.2).

Caution! Danger of injury!
switch off the main switch! Before starting the setting operation, wait until the motor stops!

- Set the maximum stitch length .
- Place a suitable material under the presser foot and mark therein the forward and the rearward stitch length.
- With an unequal length of the stitch, proceed to the correction of setting by turning the screws (2 and 3). When tightening the screw (3), the forward length of the stitch is shortened and inversely. When tightening the screw (2), the forward stitch length is lenghtened.
- Each time first loosen one screw and then retighten the other one.

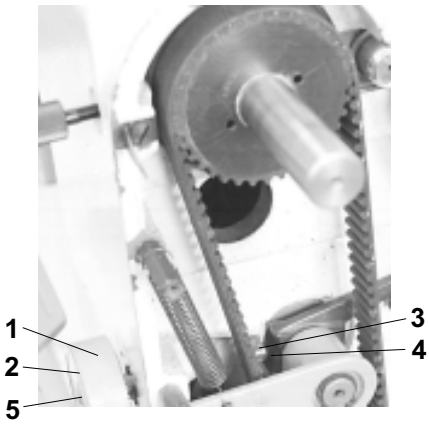

3.5.2.4 Setting the control knob (including the stitch length limitation)

The control knob (1) is to be set up in such a way that, when turning it in counterclockwise sense up to the stop, the maximum stitch length valid for the given sewing category is attained (cat. 1: 3 mm, cat 2: 5 mm, cat. 3 and 4: 7 mm). The scale of the control knob is to be oriented in such a position, so that the scale end corresponds to the maximum stitch length, excepting the first sewing category, where the stitch length of the indicator is 3 mm.

Caution! Danger of injury
Switch off the main switch! Before starting the setting operation, wait until the motor stops!

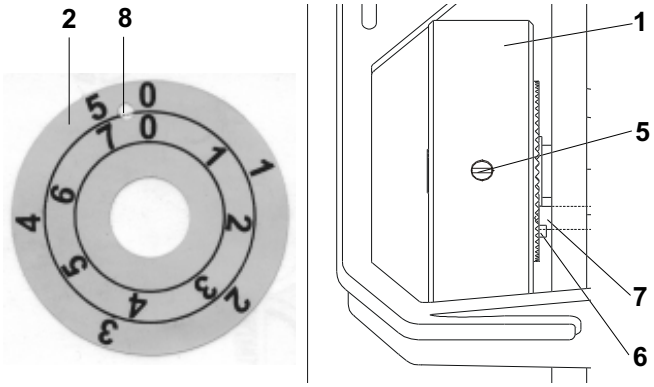

- Screw in the screw of the control knob in such a way, that the spherical surface of the screw (3) bears on the seat of the cam (4).
- Loosen the screw (5) and turn the control knob in the clockwise direction, until the pin (6) of the knob (1) bears on the pin (7). Tighten firmly the screws (5).
- Turn the knob in the counterclockwise direction up to the stop, when the pin (6) of the knob (1) bears on the pin (7).
- In a sewing test check up the length of the stitch, if this corresponds to the maximum stitch length valid for the given sewing category.
- If the stitch is longer, loosen then the screws (5) and turn the knob in the clockwise direction and inversely. Tighten firmly the screws (5).
- Insert a screwdriver into the hole (8) of the scale (2) and adjust the scale in such a way that the maximum length on the scale is against the marking of the stitch length on the machine arm.
- For the sewing category 1, set the control knob (1) on the stitch length of 3 mm and check it by a sewing test.
- Loosen the screws (5) and turn the control knob (1) in the counterclockwise direction, until the pin (6) of the knob (1) bears on the pin (7). Tighten firmly the screws (5).
- Put a screwdriver into the hole (8) of the scale (2) and adjust the scale in such a way that the value of the stitch length on the scale against the marking on the arm is 3 mm.

www.promelectroavtomat.ru

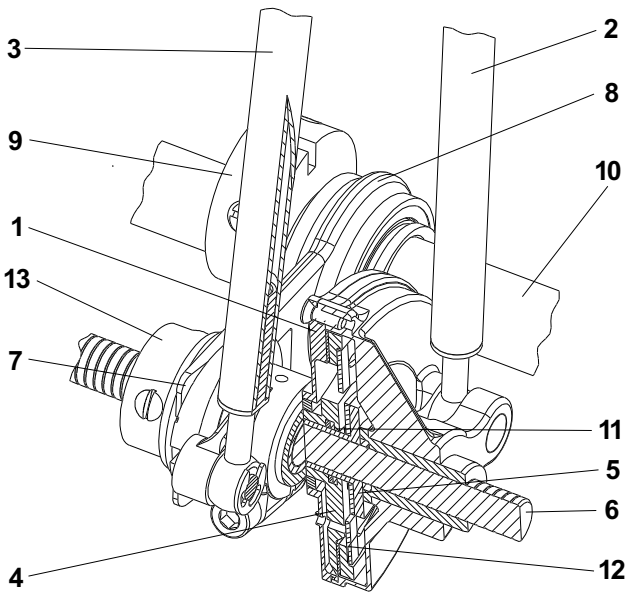

3.5.3 Lower feed wheel

3.5.3.1 Feeding clutches

3.5.3.1.1 Description

The feeding clutch is formed by the clutch cover (1) driven from the connecting bar (2), by the clutch star (4) driven from the connecting rod (3) and by the carrier plate (5) firmly connected with the shaft (6). Of the clutch give the connecting rods (2 and 3) an opposite direction swinging movement. The clutch is coupled by means of the wedge (7) on the connecting rod (8) through the eccentric (9) which is placed on the lower shaft (10).

In the position, when the wedge is disengaged, the star (4) is shifted out from the frictioning engagement with the lining of the carrier plate (5) by means of the spring washer (11). The plate (5) lining is then pushed by means of a flat profiled spring (12) against the cover of the clutch (1).

In the position, when the wedge is disengaged, the star (4) is pushed against the plate (5) lining and, at the same time, the friction connection with the cover of the clutch (1) is disconnected. Within a short instant, when engaging and disengaging with the carrier plate (5), there are in a friction engagement both the cover (1) and also the star (4), namely in the dead centre of the connecting rods (2 and 3). The setting of the change-over of clutches is done by tightening or by loosening the nut (13).

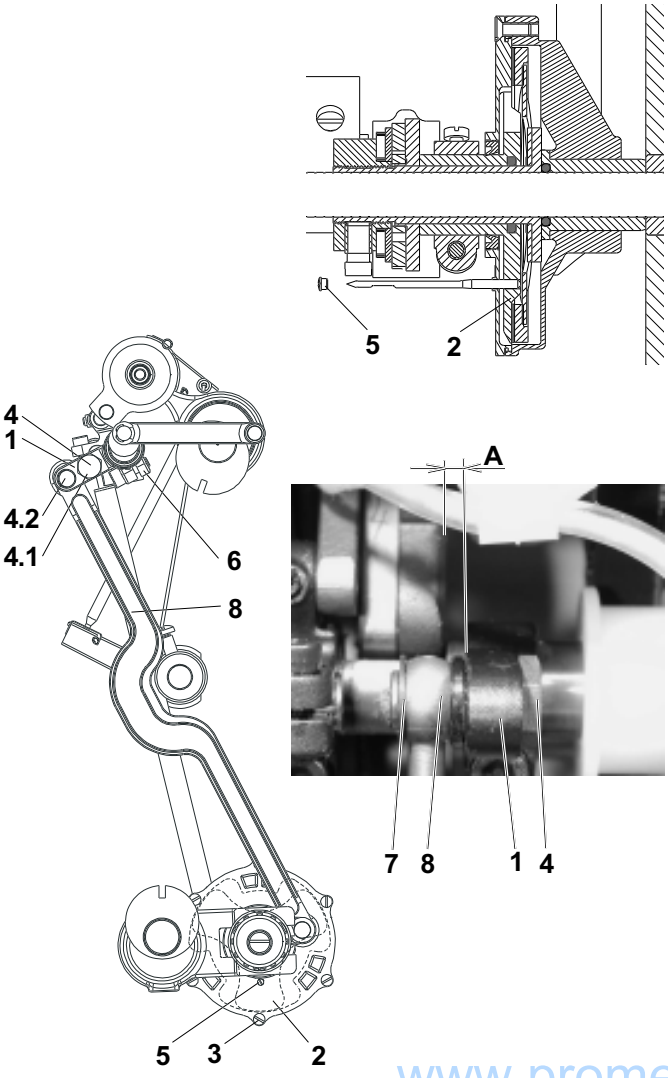

3.5.3.1.2 Setting the lever of the second step of feeding (angle, position)

The lever of the second step (1) must be set in such a way that, in the bottom dead centre of the needle, the axis of the spider part (2) lies in the screw axis (3). The pin screw (4) can be mounted into the position (4.1 - corresponds to the maximum stitch length of 5 mm) or into the position (4.2 - corresponds to the stitch length of 7 mm). The position of the pin screw is given by the sewing category (see par. 11.2).

Caution! Danger of injury!
Switch off the main switch! Before starting the setting operation, wait until the motor stops!

Lever (1) displacement.
- Loosen the screw (6).
- Set the maximum stitch length.
- Set the angle 180° on the handwheel.
- Unscrew the screw (5) and put the needle shank in its hole.
- Turn the lever (1) until the needle drops into the clutch disk (2).
- Side set the lever (1) to the measure „A“= 0.5 to 1 mm.
- Tighten the screw (6).
- Screw in the screw (5) and seal it with the Loctite cement.

Change of the position of the pin screw (4).
- Remove the retaining ring (7).
- Unscrew the screw (4) and screw it into the new position and tighten it duly. Mount the connecting rod (8) and the retaining ring (7).

www.promelectroavtomat.ru

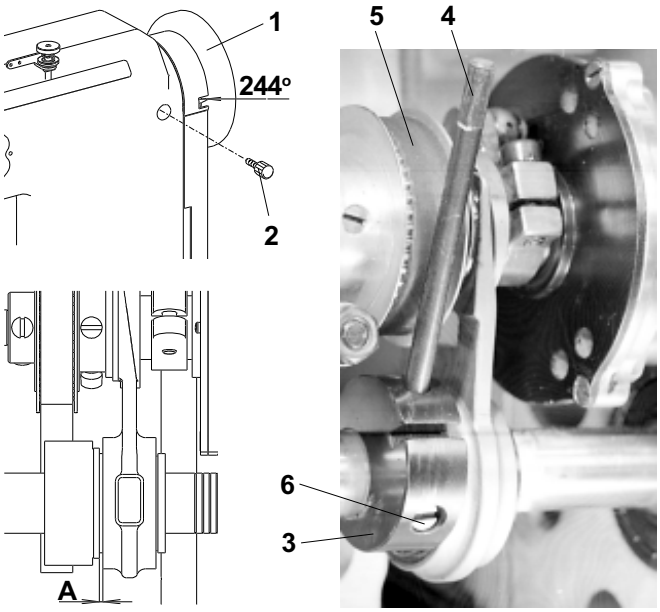

3.5.3.1.3 Setting of the lower eccentric

The rotation of the eccentric (3) must be delayed in phase by 1/4 revolution against the rotation of the eccentric of the stitch length. This corresponds to the angle of 244° on the handwheel (1), when the setting pin (4) is put into the eccentric (3) which is in contact with the indented belt (5).

Caution! Danger of injury!
Switch off the main switch! Before starting the setting operation, wait until the motor stops!

- Set 244° on the handwheel (1) and lock it with the screw (2), which is included in the accessory of the machine (tighten it carefully).
- Put the setting stick (4) into the hole in the eccentric (3) and prop it from below against the indented belt (5).
- Set eccentric (3) axially.
- Tighten it the utmost the screws of the eccentric (6).
- By means of the handwheel, turn the eccentric (3) into the marked position and check in this position the clearance „A“ = 0.05, proceed eventually to its correction by a new side setting of the eccentric.

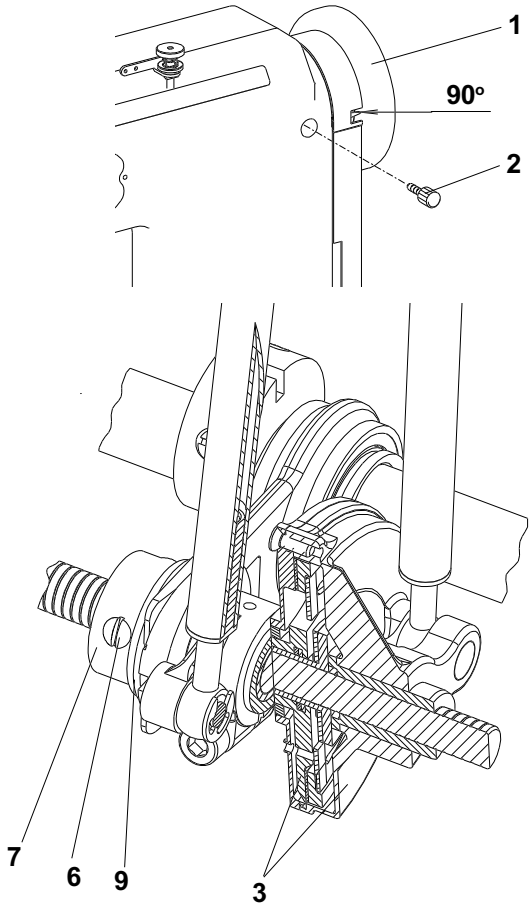

3.5.3.1.4 Setting the engagement and disengagement of the clutches

The nut (7) is to be side set in such a way that the shifting of the clutches is done at the moment when the clutch disks (3) do not move, which means, when they are at the dead center of their oscillating movement. This corresponds to the angle 90° on the handwheel.

Caution! Danger of injury!
Switch off the main switch! Before starting the setting operation, wait until the motor stops!

- Loosen the screws of the indented pulley of feeding and shift it to the left.
- Set the maximum stitch length.
- Set the angle 90° on the handwheel (1) and lock it with the screw (2). which is included in the accessory of the machine (tighten it carefully).
- Loosen three screws (6) in the nut (7) and unscrew it by 2 mm to the left.
- Tighten slowly the nut (7), until it strikes against the axial bearing (9). (At this moment, the tightening moment increases in jumps) and tighten the screws (6).
- Set the the handwheel on 85° and push the backtacking lever, the feeder is to turn against the movement of the needle. Set then the handwheel on 95°, the feeder is to be turned in the sense of the needle movement. If not being so, correct the side setting of the nut (7). When the clutches shift too soon, turn a bit the nut (7) to the right and inversely.
- Tighten the screws (6).
- Return the indented pulley in its original place according to the paragraph 3.6.2.

www.promelectroavtomat.ru

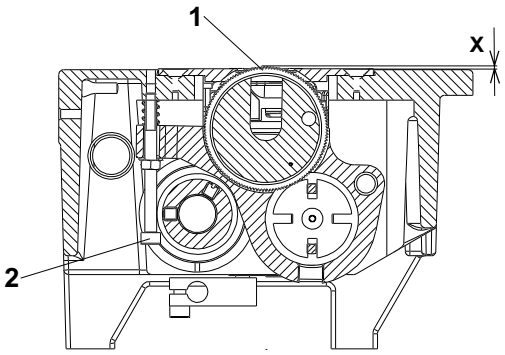

3.5.3.2 Wheel feeder and its post

3.5.3.2.1 Height setting of the feeder

The wheel feeder (1) is to be set in such a way that the points of its teeth overtop the throat plate insert by „X“= 0.3 to 0.7 mm. When sewing soft and thick materials, it is necessary to increase the value „X“, until a good quality of feeding is attained, but only to the measure of not deteriorating the beginning of sewing after the carried out thread trimming. Set the height of the feed dog using a setting gauge as per the respective figure.

Caution! Dangere of injury!
Switch off the main switch! Before starting the setting operation, wait until the motor stops!

- To increase the tooth height above the throat plate, screw in the screw (2) by the required value.
- To reduce the height, proceed inversely.

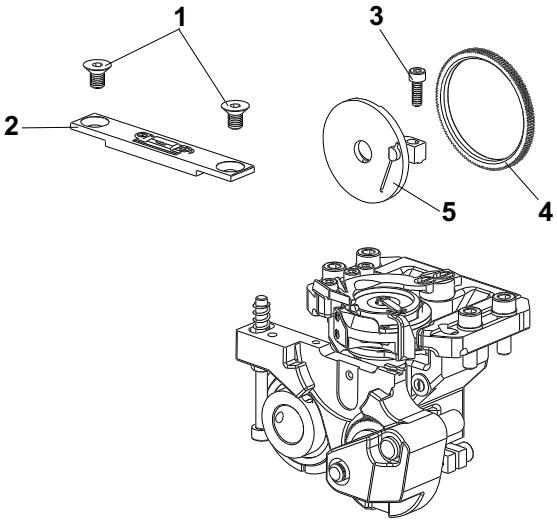

3.5.3.2.2 Replacement of the feeder

For the replacement of the wheel feeder according to the machine setting - see par. 11.2 - setting of the machine - feeder - pitch of the teeth.

Caution! Danger of injury!
Switch off the main switch! Before starting the setting operation, wait until the motor stops!

- Unscrew the screws (1) and remove the throat plate (2).
- Unscrew the screw (3) and pull out the feeder (4) with the guide (5).
- Replace the feeder (4).
- Insert the feeder with the guide into the groove and screw the screw (3) in.
- Mount the throat plate (2) and tighten up the screws (1).

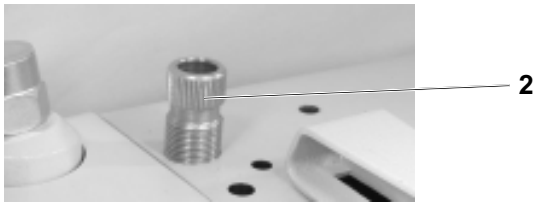

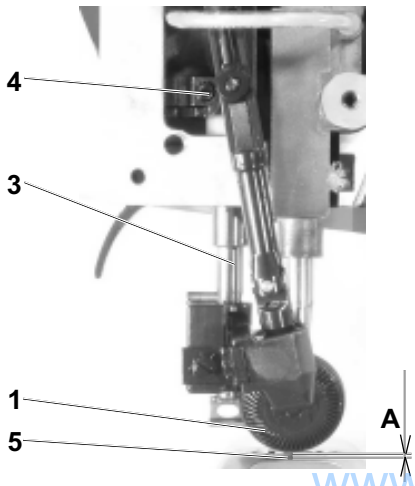

3.5.4 Setting the top roller (pressing force, height)

When lowering the top roller (1), set the clearance „A“ between the feeder (5) and the top roller to the maximum of 0.2 mm. Set the pressing force of the top roller (1) so as to avoid the slippage of the sewn material when feeding it.
Method of setting the height of the top roller:

- Lower by hand the presser bar (3) with the top roller (1) above the wheel feeder (5).
- Loosen the screw (4) and set the required value „A“ (0.2 mm).
- Tighten the screw (4).

Setting the force of the top roller (1).

- In screwing in the screw (2),the force of the top roller is increased and inversely.

www.promelectroavtomat.ru

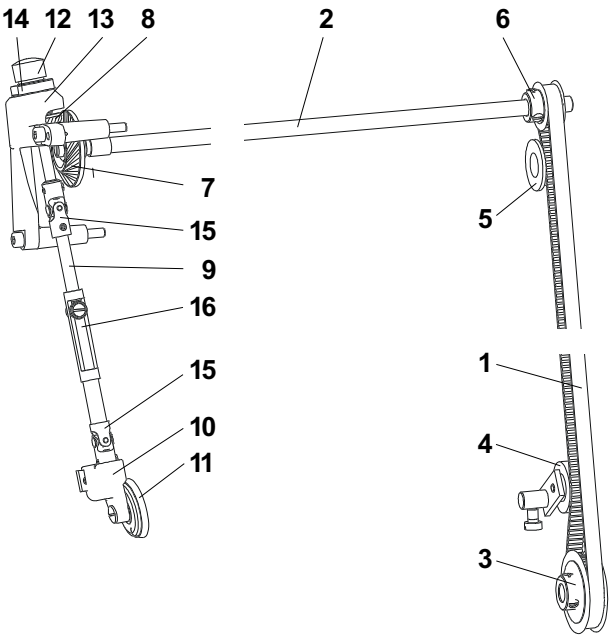

3.6 Feeding mechanism of the top roller

3.6.1 Description

The starting movement for the drive of the top roller feeder is the bottom feeding shaft. From this shaft, the movement is transmitted by the indented belt (1) onto the top feeding shaft (2). A component part of the transmission by indented belt is the pulley (3), the tensioning roller (4), the roller (5) and the pulley (6). Starting from the shaft (2), the movement is further transmitted through the wheels (7 and 8) ontothe articulated shaft (9). From this articulated shaft, the movement is transmitted by a cone transmission, situated in the holder (10), onto the feeder wheel (11). The shaft of the wheel (8) is mounted in the screw (12) on bearings. The articulated shaft (9) contains two joints (15) and a telescopic part (16). Both these elements secure the lifting and the tilting of the top roller.

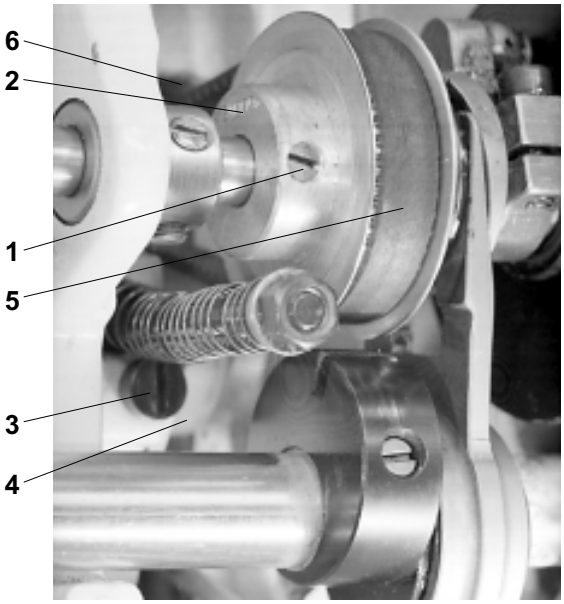

3.6.2 Side setting of the indented lower pulley

The pulley must be set up in such a way that the belt passes through the centre of the passing hole in the bedplate. The setting operation is to be done as follows:

Caution! Danger of injury!
Switch off the main switch! Before starting the setting operation, wait until the motor stops!

- Loosen the screws (1) of the pulley (2).
- Loosen the screw (3) of the tensioning roller (4)
- Set the pulley (2) in such a way that the belt (5) passes through the centre of the passing hole in the bedplate (6).
- Tighten the screws (1).
- Set the tensioning roller (4) axially in such a way that the belt (5) is set at the middle of the tensioning roller (4).
- Set the tensioning roller (see par. 3.6.4).
- Tighten up the screw (3) of the tensioning roller (4).

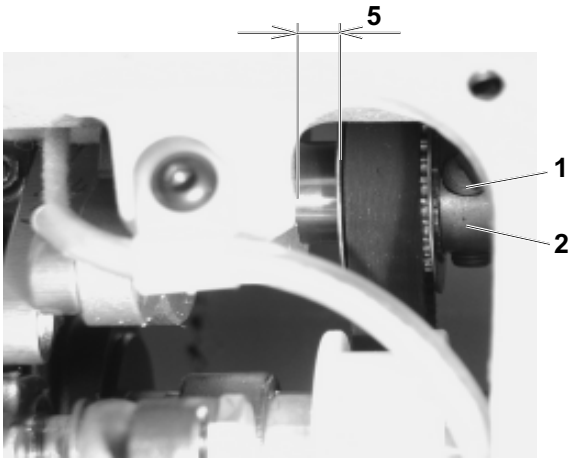

3.6.3 Side setting of the indented upper pulley

The pulley is to be set in such a way that the indented belt is not crossed and the pulleys are in line. The setting thereof is to be done as follows:

Caution! Danger of injury!
Switch off the main switch! Before starting the setting operation, wait until the motor stops!

- Loosen the screws (1) of the pulley (2).
- Set the pulley (2) in such a way that the distance of 5 mm is attained in accordance with the illustration.
- Tighten the screws (1).

www.promelectroavtomat.ru

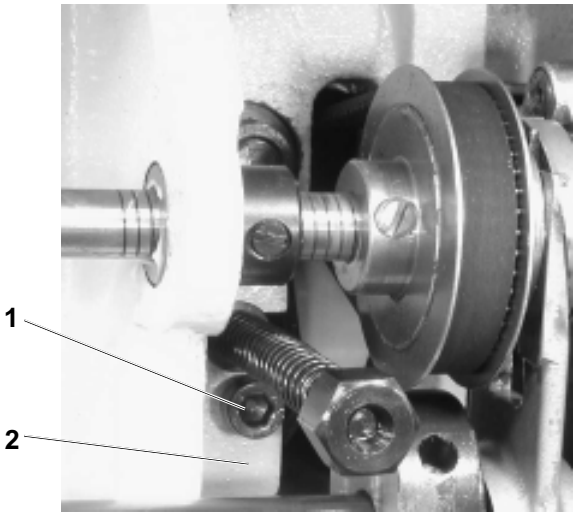

3.6.4 Setting the tensioning roller

The tensioning roller of the indented belt of the top feeding is mounted in a rotary way on the bedplate. The belt must be ten-sioned as needed in such a way that there is ensured the correct function of the transmission. Insufficient tension can cause skipping of the teeth, on the contrary, excessive tensioning enormously loads the mounting of the top shaft. The setting thereof is to be done as follows:

Caution! Danger of injury!
Switch off the main switch! Before starting the setting operation, wait until the motor stops!

- Loosen the screw (1) securing the lever of the tensioning roller (2).
- Tension the belt as needed (theoretically, in applying the force of 10 N in the middle of the belt with the deflection of 4 mm).
- Tighten the screw (1).



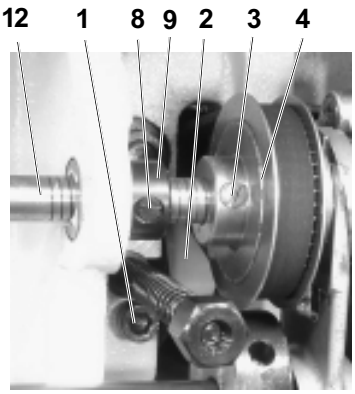

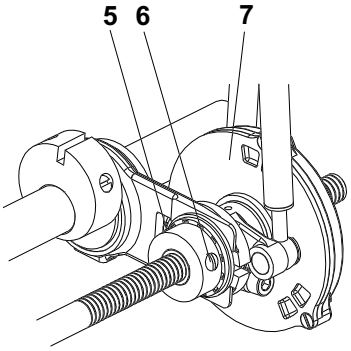

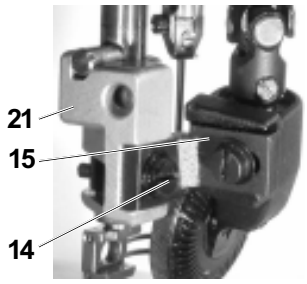

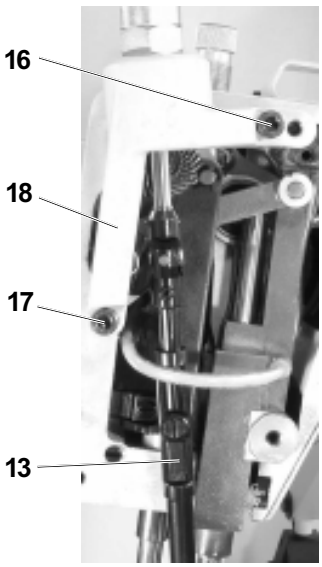

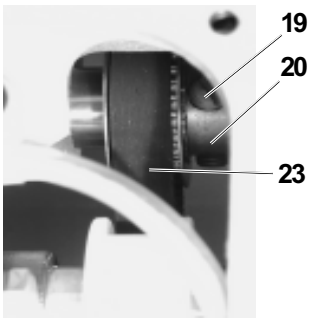

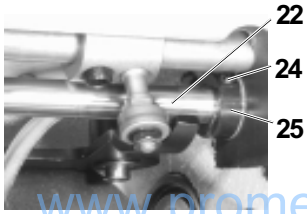

3.6.5 Replacement the indented belt

Before replacing the indented belt, the bottom feeding shaft is to be removed. The procedure is as follows:

Caution! Danger of injury!
Switch off the main switch! Before starting the setting operation, wait until the motor stops!

- Loosen the screw (1) of the tensioning roller (2) and loosen it.
- Loosen the screws (3) of the pulley (4) and shift it to the left in such a way that the screws (5 and 6) of the feeding clutch (7) are accessible.
- Loosen the screws (5 and 6).
- Loosen the screws (8) of the axial ring (9).
- Loosen the screw (10) of the clutch (11).
- Push the shaft (12) to the right in such a way that it is out of the pulley (4).
- Remove the pulley (4).
- Remove the front guard.
- Loosen and unscrew the screw (14) of the holder of the wheel (15) and remove it from the holder (21).
- Loosen the screws (16 and 17) of the holder (18).
- Remove the holder (18) together with the holder (15) and articulated shaft (13) from the machine.
- Loosen the screws (19) of the pulley (20).
- Loosen the screw (24) of the ring (25).
- Hold the pulley (20) and pull out the feeding shaft (22) from the arm in such a way that it is possible to remove the indented belt (23) from the arm of the machine.
- Replace the belt with a new one and proceed to the assembly (inverted procedure of dismantling).
- Proceed to the setting operation according to the par. 3.6.2, 3.6.3 and 3.6.4.

www.promelectroavtomat.ru

3.6.6 Top roller

3.6.6.1 Selection of the top roller diameter

The machine can be supplied with two types of top roller, namely with the diameter of 25 mm and with the diameter of 35 mm. The suitability of the diameter used depends on the type of sewing and on the concrete technological operation. There are in general valid the following principles for the selection of the wheel diameter:

ø 25 mm - for sewing small radii
ø 35 mm - for sewing straight sections or big radii
- for sewing with great passages to thicker materials

3.6.6.2 Forward, rearward and side setting

The top roller must be in a defined position in relation to the needle:

a) view (see Fig. 1) - the value „X“ depends on the diameter of use top roller (ø 25 - 6.5 mm; ø 35 - 10.5 mm), it is measured from the the needle bar up to the roller edge when turning the handwheel to the 180° of the scale against the indicator
b) view (see Fig. 2) - the wheel edge must fit with the edge of the needle operture at the spot of the needle punch.

These values are to be set as follows:

Fig. 1

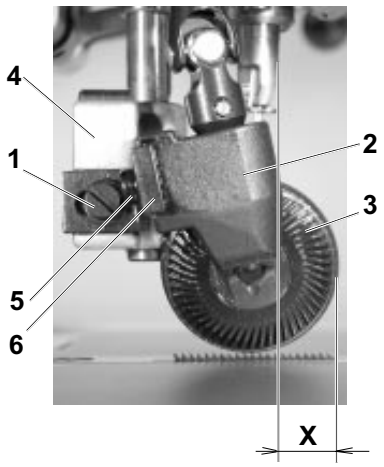

Fig. 2



Caution! Danger of injury!
Switch off the main switch! Before starting the setting operation, wait until the motor stops!

- Loosen the screw (1).
- By shifting the holder (2) with the top roller (3) in the groove of the holder (4) set the required value „X“ and tighten the screw(1).
- Loosen the screw (5)
- By shifting the holder (2) in the holder (6) set the bottom edge of the roller to the edge of the needle operture.
- Tighten the screw (5).

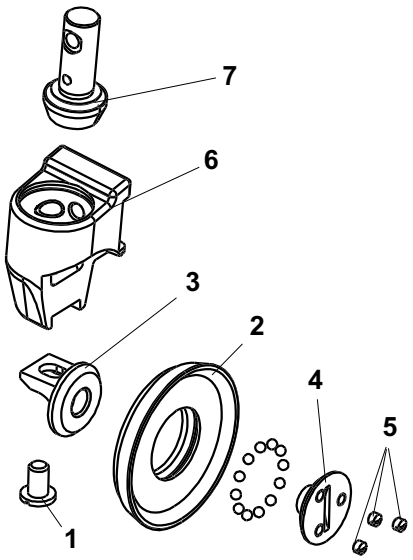

3.6.6.3 Setting the gear clearance and in the mounting of the top roller

In the cone gear of the drive of the top roller foot, the minimum clearance must be set. A too small clearance will increase the friction resistance of the gear, the excessive clearance will influence the inaccuracy of feeding. The top roller itself is mounted on balls. With this type of mounting,it is also necessary to set the minimal possible radial clearance.
The given clearances are set as follows:

Caution! Danger of injury!
Switch off the main switch! Before starting the setting operation, wait until the motor stops!

Clearance in the wheel mounting

- Loosen three screws (5) /only slightly/.
- Using the screw (4) set the minimum clearance in the top roller mounting (2) /it must easily rotate without any rubbing and with a minimum clearance/.
- Tighten the screws (5), check the set up clearance, eventually, repeat the setting procedure.

Clearance in the conic gear

- Loosen the screw (1), in shifting the wheel, resp. the holder (3) in the holder groove (6), set the minimum clearance, the pinion (7) must be pushed up to the holder bottom (6).
- Tighten the screw (1), check the set up clearance.

www.promelectroavtomat.ru

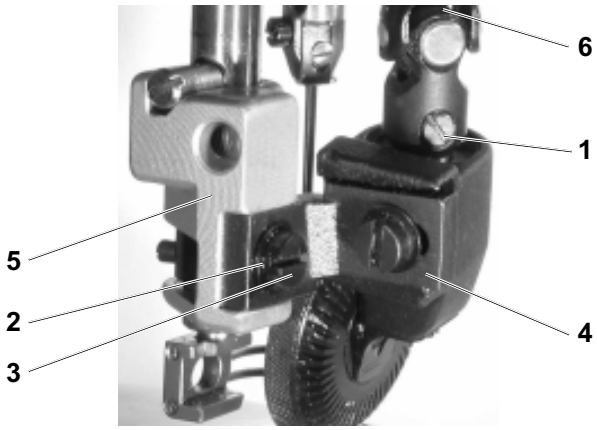

3.6.6.4 Replacement of the top roller

When replacing the top roller, proceed as follows:

Caution! Danger of injury!
Switch off the main switch! Before starting the setting operation, wait until the motor stops!

- Unscrew the screw (1).
- Unscrew the screw (3) with the washer (2).
- Remove the driven top roller with the holder (4) from the holder (5) and from the articulated shaft (6).
- Mount another top roller in inverted procedure to dismantling.
- Set the top roller according to the par. 3.6.6.2.

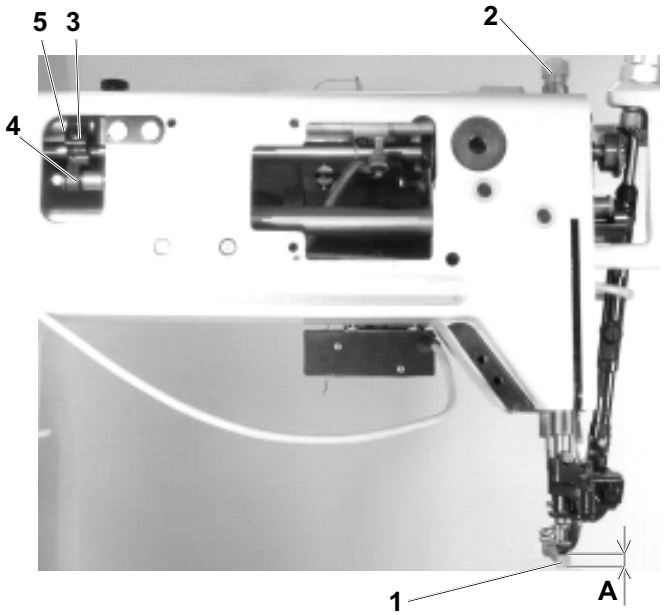

3.7 Setting the presser foot lift

The maximum lift of the presser foot when lifting the foot with knee lever or with electromagnet is to be „A“ = 12.5 mm.

Caution! Danger of injury!
Switch off the main switch! Before starting the setting operation, wait until the motor stops!

- Place a cube (1) having the height of „A“ = 12.5 ± 0.7 mm under the presser foot.
- Screw in thoroughly downwards the screw (2).
- Tighten slightly the screw (3) in such a way that the lever (4) turns on the shaft (5) with a certain friction moment.
- Push with the screwdriver on the lever (4), until it attains the wall inside the arm of the sewing machine.
- Return the lever (4) back by about 1 mm and tighten the screw (3). With the maximum top roller lifting, the lever will not strike into the machine arm.
- Check the axial clearance of the shaft (5) which should be the least possible.
- Using the screw (4) set the normal pressure force of the presser foot.

www.promelectroavtomat.ru

3.8 Bobbin winder

3.8.1 Description

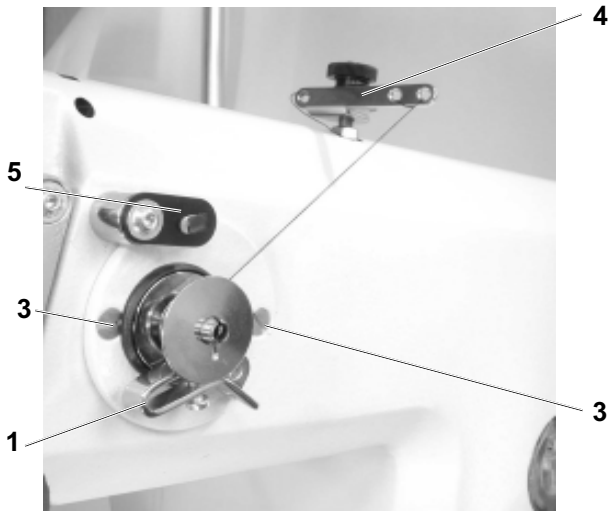

The winder (bobbin winder) winds a reserve of the hook thread. It is driven by a spring-mounted friction gear, which stops after having filled the bobbin.
An ideal winding is attained with a sufficient pretension of the thread obtained on the thread guide (4) and with 1 mm under the diameter of the bobbin. The shaft is mounted in a swinging way and the friction gear is put into engagement by means of a pickup lever (1) and a cam. The winder is fixed on the machine arm by two screws (3). The thread is passed through according to the illustration, the thread is cut off after having stopped the winding operation using the cutting device (5).

3.8.2 Setting the bobbin winder stop

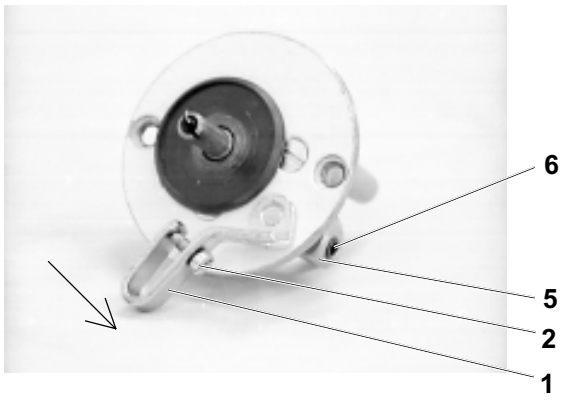

The moment of interrupting the winding is determined by the mutual position of the pickup lever (1) and the cam (5) on a common shaft.
The cam is locked in its functional position by the screw (6). The mutual position is to be set on a not incorporated winder in such a way that in the moment, when the pickup lever leaves the space of the bobbin, the pressing function of the cam on the winders shaft is interrupted and it moves in the sense of the arrow. A fine setting is to be done on an incorporated condition in the machine. Using the screw (2), the position of the friction part of the pickup lever (1) is adapted. In opening the lever, the stopping function is accelerated. Its inverse function delays it. A test is to be done after having inserted the bobbin, when passing the thread through the device and when winding at the running of the machine.

3.8.3 Setting the friction gear

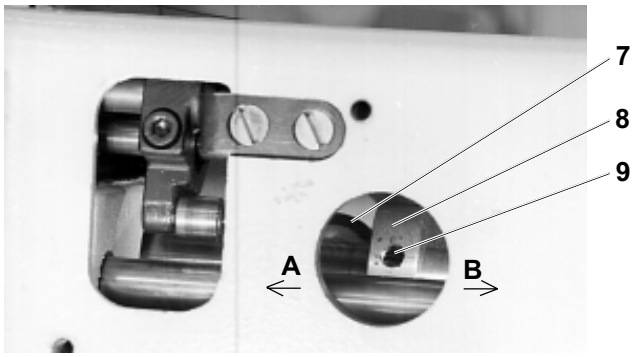

The friction gear is formed frontally by the disk (8) on the main top shaft of the machine and by the disk (7) with a rubber ring on the shaft of the winder.



Caution! Danger of injury!
Switch off the main switch! Before starting the setting operation, wait until the motor stops!

- Proceed to the setting operation with a removed rear guard.
- The winder is in its stopped position.
- Loosen two screws (9) in the disk (8) through the hole in the arm.
- By shifting axially the disk in the sense A, B, set the disks of the winder (7) at the distance of 0.5 mm from the rubber ring.
- Tighten the screws (9) in the disk (8).
- Put the winder in its working position and proceed to a winding test.
- Mount the rear guard.

www.promelectroavtomat.ru

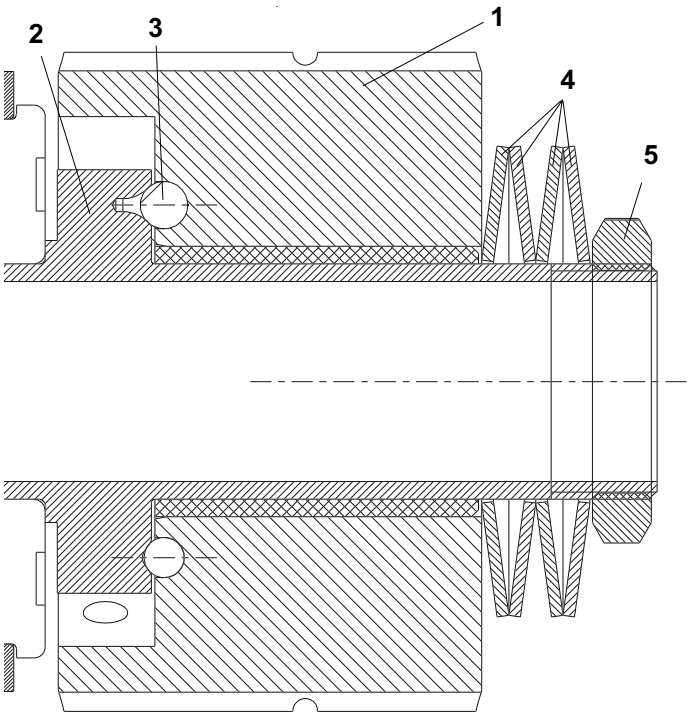

3.9 Safety clutch

3.9.1 Description

The machine is provided with a safety clutch which enables the turning through of the lower belt wheel (1) on the hub of the lower shaft (2), when the hook is blocked. This blocking occurs due to the penetration of thread into the hook path. With current running, this clutch should not disengage during the normal running. The mutual coupling of the belt wheel (1) and the hub (2) is effected by means of the bills (3) which are firmly connected with the belt wheel (1). The bills fit in the conic holes of the hub (2) and are pushed therein by means of the springs (4).
Putting the clutch in its working position, eventual checking its correct position are to be done in blocking the hook using a screwdriver and in turning a bit the handwheel.

3.9.2 Setting the disengaging moment

Caution! Danger of injury!
Switch off the main switch! Before starting the setting operation, wait until the motor stops!

The correct value of the tensioning moment (8 Nm) has been set up by the manufacturer. when this value is lower, in a current running, the clutch may disengage. In an opposite case (the moment is higher), the clutch will not disengage. In both cases it is necessary to proceed to a correction of the moment. In turning the nut (5) to the right, the moment will increase and on the contrary. The value of the tensioning moment is very sensible to the turning of the nut (5). When setting it, it is necessary to proceed very carefully, set it up only in emergency cases! Check the moment using a torque-limiting wrench.

Caution!
The clutch guarantees only one mutual position of the hub of the lower shaft (2) and that of the belt wheel (1). No checking according to the gauge marks is needed. Putting the clutch out of operation by excessive tightening of the nut (5) can cause, when blocking the hook, the destruction of the gear within the drive of the hook.

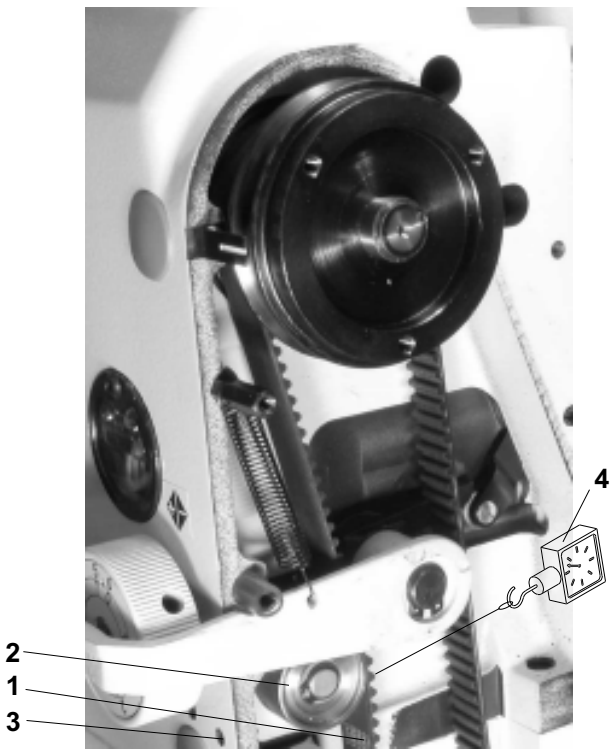

3.10 Indented belt transmission

3.10.1 Setting the tensioning roller of the indented belt

The optimum tension of the indented belt (1) is attained in setting the tensioning roller (2) in such position, when the roller applies the pressure of F = 20 N against the belt. The roller must be side set in such a way that the edge of the indented belt does not overlap over the edge of the roller.

Caution! Danger of injury!
Switch off the main switch! Before starting the setting operation, wait until the motor stops!

- Remove the handwheel and the belt guard, remove the V-belt.
- Unlock the fastening of the loop, on which the roller (2) is mounted in such a way that the loop turns freely.
- Lift the roller (2) upwards and, thereafter, using the dynamometer (4), pull horizontally the roller in applying the force of 20 N. In this position, tighten the fastening screw (3).
- Check the side shifting of the roller.

www.promelectroavtomat.ru

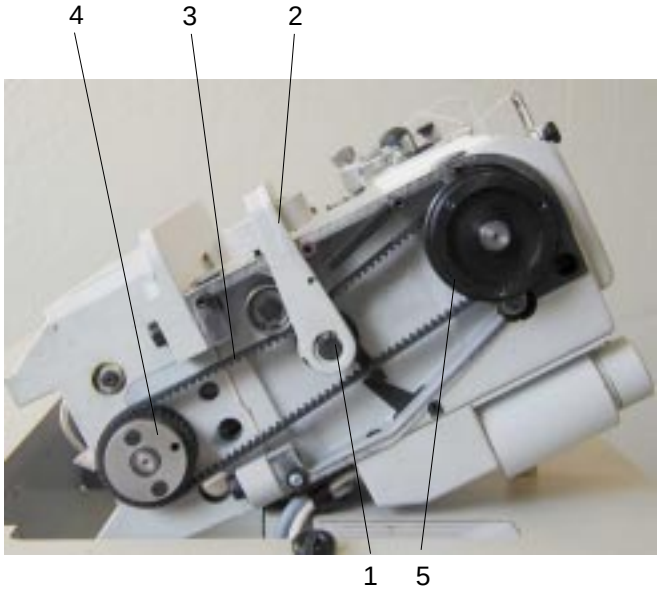

3.10.2 Replacing the indented belt

To observe: in machines with Mini-stop first remove the driving toothed belt as instructed in par. 3.12.
When replacing the indented belt, the mutual position of the pulleys (4 and 5) should be maintained.

Caution! Danger of injury!
Switch off the main switch! Before starting the setting operation, wait until the motor stops!

- Remove the handwheel, the belt guard and the V-belt.
- Remove the retaining ring (1) and remove the backtacking lever (2).
- Mark with a pencil the instantaneous position of the indented pulleys against the machine head in any position.
- Remove the indented belt (3) from the bottom indented pulley (4) first, and then remove the whole belt.
- Apply a new indented belt on the top indented pulley (5) first.
- Turn both indented pulleys in the formerly marked positions and apply the indented belt on the indented pulley (4).
- Tension the belt and mount the dismantled components in the inverse order.

3.11 V-belt, motor - head

3.11.1 Tensioning

Caution! Danger of injury!
Switch off the main switch! Before starting the setting operation, wait until the motor stops!

The belt is correctly tensioned, when the opposite sides of the belt approach one to another by up to 20 mm in applying the force of 10 N. The belt is tensioned in turning respectively the motor in its holder.



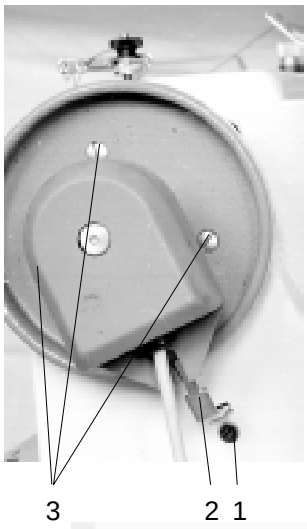



3.11.2 Replacing the V-Belt

Caution! Danger of injury!
Switch off the main switch! before starting the setting operation, wait until the motor stops!

- Loosen the screw (1) of the positioner arrest (2) and tilt the arrest.
- Unscrew the screws (3) of the handwheel.
- Unscrew the screws (4) of the belt guard and tilt the guard.
- Remove the belt guard of the motor and tilt the protections against falling out the belt from the motor pulley.
- Replace the belt.
- Tension the belt (see par. 3.11.1).

3.12 Driving toothed belt

3.12.1 To exchange the driving toothed belt

Caution! Danger of injury!
Switch off the main switch! before starting the setting operation, wait until the motor stops!

- Remove the machine head from the stand (uncouple the motor cables, the machine head cable and screw off the wood screw and the screw from the hinges).
- Remove the belt guard (1).
- Replace the belt (2).



www.promelectroavtomat.ru

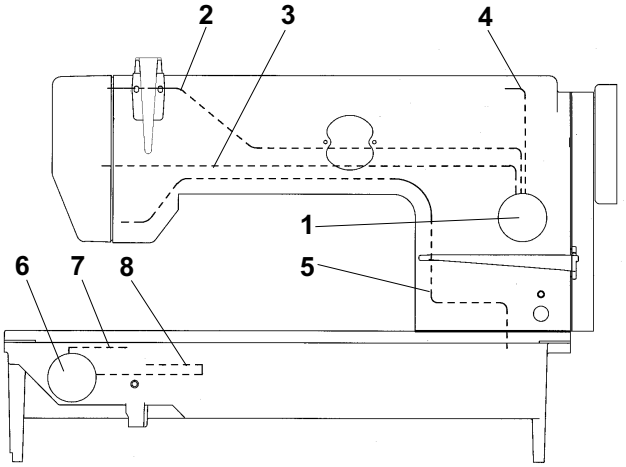

3.13 Lubrication

3.13.1 Description

From the lubricating tank (1) there issue three suction wicks. The wick (2) lubricates the pin of the thread mechanism, the wick (3) lubricates the needle mechanism and the wick (4) lubricates the stitch length mechanism. The superfluous oil from the needle and thread mechanisms is sucked off by the wick (5) and lubricates the shifting wedge of the feeding clutch.
In the bedplate there is the oil tank (6) placed. The wick (7) lubricates the hook and the wick (8) lubricates the gearing of the hook drive.

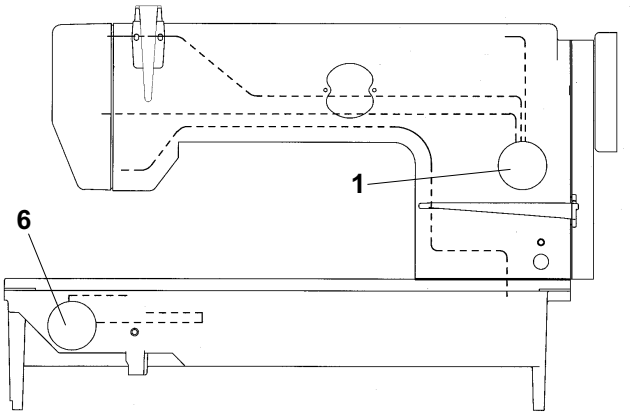

3.13.2 Refilling oil

For lubricating the machine oil Esso SP-NK 10, DA 10 is used or other oil with the same quality. When putting the machine into operation, each mechanism of the machine is to be lubricated with several drops of oil. Oil is only refilled thereafter into the oil reservoirs using an oil can into the holes in the oil level indicators.
The oil tanks (1) and (6) of the oil distribution are to be filled up to the mark.

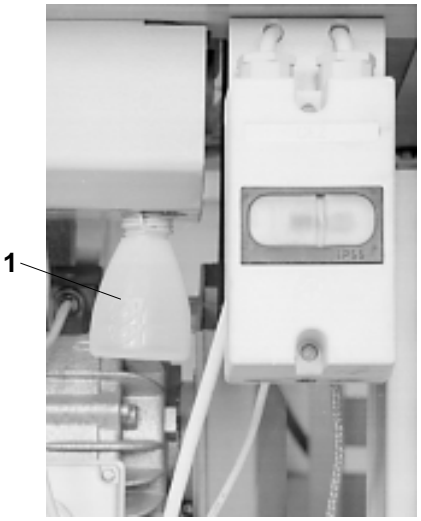

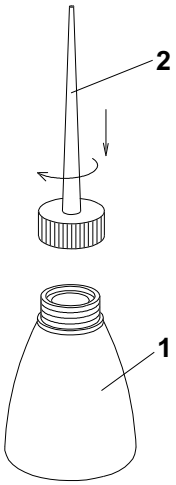

3.13.3 Multiple oil use

Oil which runs into the oil cup is collected in the collector (1) and may be reused for refilling the oil reservoirs in the machine - see par. 3.13.2.
The oil collector (1) with the collected oil is uscrewed and the top part of the oil can (2) which is added in the machine packing is screwed in. Oil is then refilled into the reservoirs on the machine head and everything is put into the original condition.

www.promelectroavtomat.ru

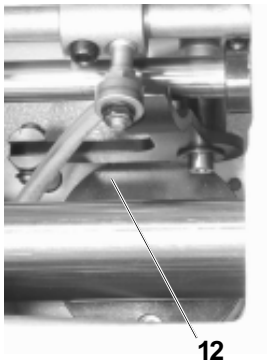

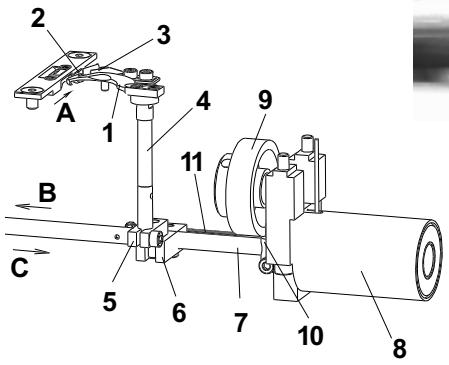

4. Thread trimming

4.1 Description of the trimming mechanism

During the trimming cycle, the moving trimming knife (1), in an opportune moment, hooks up the sewing threads and pulls them in the sense of the arrow (A) against the fixed knife (2) until the threads are trimmed. The spring (3) holds the hook thread after being trimmed off. The moving knife (1) is mounted on the shaft (4) which turns by means of the lever (5) under the effect of the fork (6) fixed on the shaft (7) which is shifted by the electromagnet (8) from its starting position in the sense of the arrow (B). When moving back in the sense of the arrow (C), the shaft (7) is shifted by the cam (9) through the pickup roller (10) into the starting position. The spring (11) maintains the mechanism in its starting position. The electromagnet (12), in an opportune moment, loosens the main thread tensioner. At the end of the trimming cycle, both electromagnets (8 and 12) are switched off.

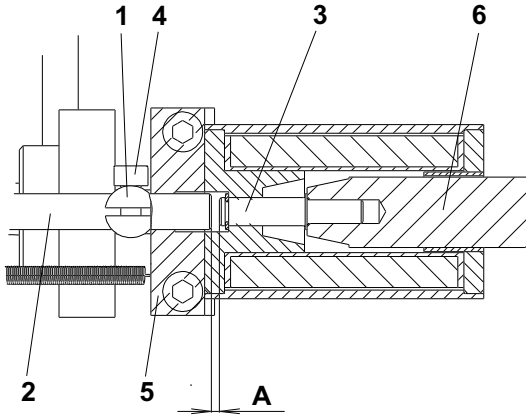

4.2 Setting the pickup roller

The holder of the pickup roller (1) is to be fixed in such a way that it is positioned, in its starting position, between the shaft (2) and the shaft (3), the respective gap „A“ = 0.2 to 0.4 mm.

Caution! Danger of injury!
Switch off the main switch! Before starting the setting operation, wait until the motor stops!

- With the loosened screw (4), put the holder of the pickup roller (1) up to the stop against the bracket (5) and, at the same time, the shaft (2) up to the stop against the shaft (3).
- With the holder (1) held on the stop, shift the shaft (2) in such a way that there appears the gap „A“ = 0.2 to 0.4 mm, and tighten the screw (4).
- Check the gap „A“ in shifting the armature (6).

4.3 Setting the cam

The position of the cam (1) against the shaft (2) is to be such, so that when the adjusting pin is in contact with the shaft (4), the protractor scale of the handwheel (6) shows just the angle of 108°. If the pickup roller (5) is in its starting position of rest, the clerarance between the roller (5) and the cam (1) should be as small as possible but sufficient to prevent the cam from getting into accidental contact with the roller.

Caution! Danger of injury!
Switch off the main switch! Before starting the setting operation, wait until the motor stops!

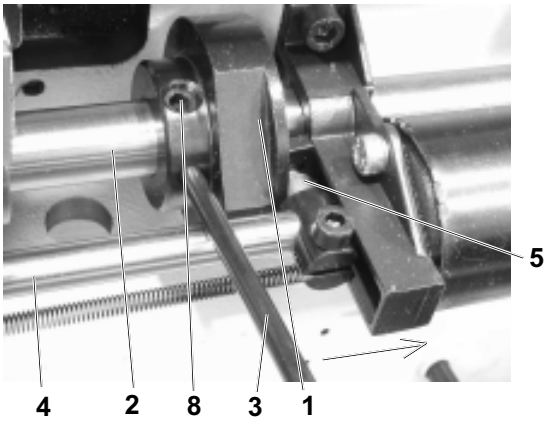

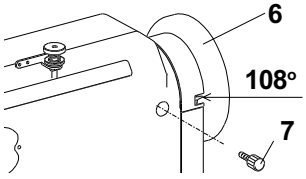

- Set the angle of 108° on the handwheel (6) and lock it with the screw (7) which is included in the accessory of the machine (tighten with care).
- Shift the pickup roller (5) in the sense of the arrow up to the stop.
- Insert the adjusting pin (3), which is included in the accessory, into the cam and turn the cam, until the pin (3) gets the contact with the shaft (4).
- Insert a gauge having the thickness of 0.1 mm between the cam (1) and the pickup roller (2) and shift the cam against the gauge up to the stop. Tighten then the screw (8).
- Loosen the blocking of the handwheel, turn a bit the cam and tighten the second fastening screw of the cam too.

www.promelectroavtomat.ru

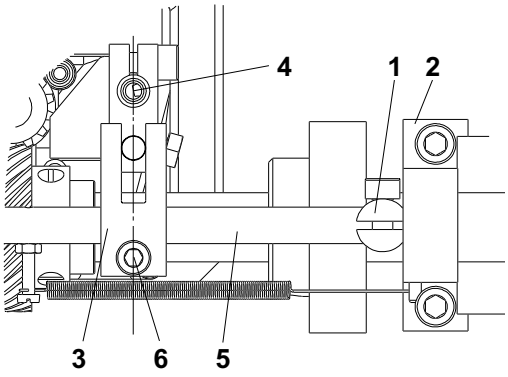

4.4 Setting the fork

In the starting position of rest of the trimming mechanism, when the holder (1) is in contact with the bracket (2), the axis of the fork (3) must intersect the axis of the shaft (4).

Caution! Danger of injury!
Switch off the main switch! Before starting the setting operation, wait until the motor stops!

- Shift the shaft (5), until the holder (1) strikes the bracket (2).
- Loosen the screw (6).
- Shift the fork (3) in such a way that its axis intersects the axis of the shaft (4).
- Tighten the screw (6).

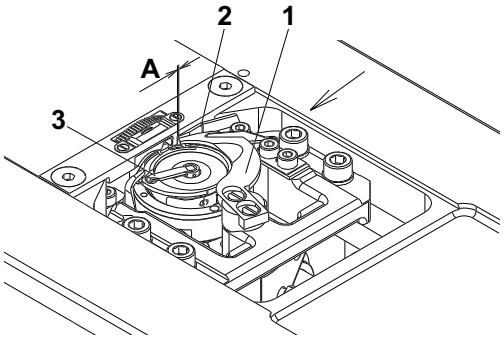

4.5 Setting the moving knife

The moving trimming knife (1) is to be placed in its starting position at rest with its end at the distance of the measure „A“= 0.1 to 0.5 mm from the edge of the fixed trimming knife (2).
The height setting is to be such that its top surface is 1.8 mm below the top surface of the throat plate.

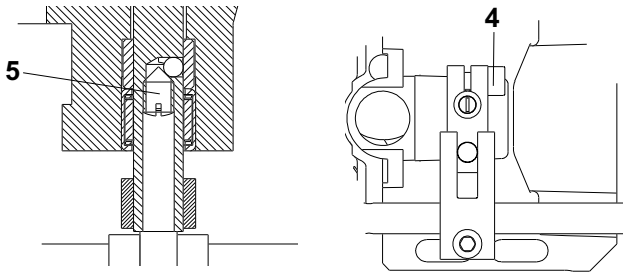

Caution! Danger of injury!
Switch off the main switch! Before starting the setting operation, wait until the motor stops!

- Loosen the screws (4 and 5).
- Turn the moving trimming knife (1) in the sense of the arrow and set it in height. Tighten the screw (5).
- Turn the moving trimming knife (1) into its starting position in such a way that the measure„A“ = 0.1 to 0.5 mm is attained. Tighten the screw (4).

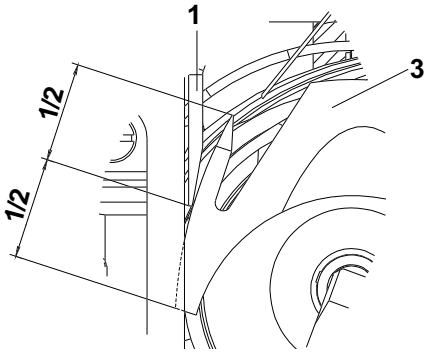

4.6 Setting the fixed knife

The fixed trimming knife (1) is to be tensed up in such a way that it bears on the moving trimming knife in the 1/2 of its length. The knives need not to trim untensioned threads.

Caution! Danger of injury!
Switch off the main switch. Before starting the setting operation, wait until the motor stops!

- Set the angle of 300° on the handwheel (4).
- Shift by hand the moving knife (3) into the marked position.
- Try to set the tensing up of the fixed trimming knife (1) and retighten the screw (2).
- Check the bearing spot of the moving trimming knife (3) on the fixed trimming knife (1) and give it a correction, if needed.

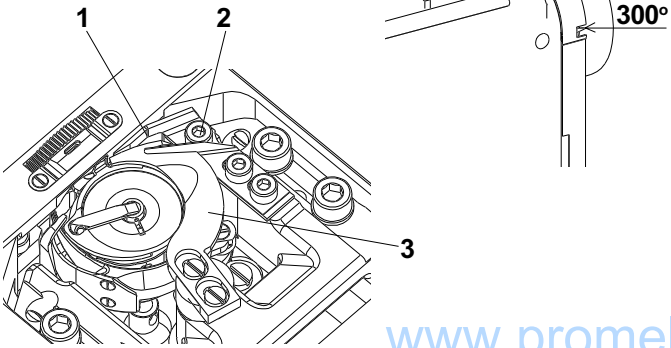

www.promelectroavtomat.ru

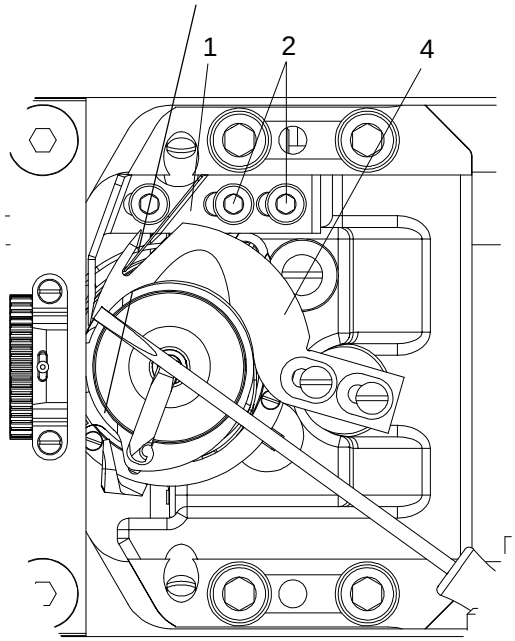

4.7 Setting the retaining spring of the hook thread

The retaining spring (1) holds the hook thread after having performed the trimming. It is to be set in such a way that the force necessary for pulling out the thread from the retaining spring (1) is approximately equal to the force necessary for pulling out the thread from the hook.

Caution! Danger of injury!
Switch off the main switch! Before starting the setting operation, wait until the motor stops!

- Shape the retaining spring (1) in such a way that it fits close with all its surface (without wedge) onto the moving trimming knife (4).
- Shape the retaining spring in such a way that with moderately tightened screws (2) it comes to lean against the moving trimmer knife with a pre-load corresponding to the force required to draw the thread out of the spring.
  The pulling force is tested using a screwdriver according to the illustration.

Caution!
The setting of the retaining spring (1) depends on the setting of the hook thread tension and differs then according to the respective sewing category.

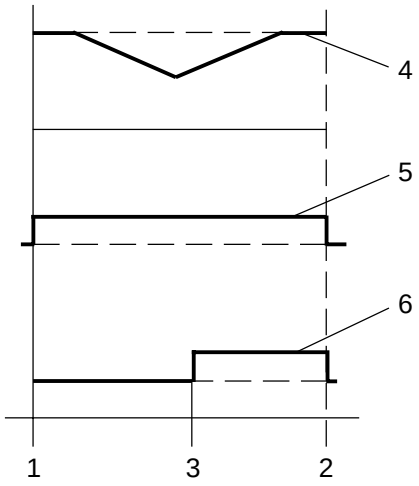

4.8 Setting the switching of electromagnets

The electromagnets of the trimming device and loosening of the tensioner must work in accordance with the diagram. This is ensured by setting the stopmotor (see the instructions for use of the stopmotor).

1- 1. position of the needle (135□ on the handwheel)
2- 2. position of the needle (64□ on the handwheel)
3- position of stopping the tensioner (10□ ÷ 25□ on the handwheel)
4- movement of the pickup roller
5- current of the trimming device electromagnet
6- current of the tensioner loosening electromagnet

5. Lifting the top roller by electromagnet

5.1 Description

The core of the electromagnet, respectively its pin must be set in such a way that the presser foot lifting is enabled.

5.2 Setting the electromagnet pin

Caution! Danger of injury!
Switch off the main switch! Before starting the setting operation, wait until the motor stops!

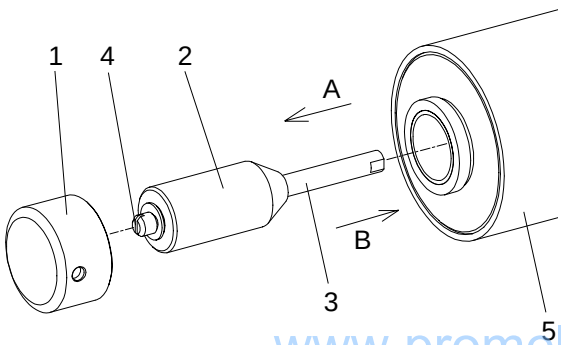

- Unscrew the cap of the core (1) of the electromagnet.
- Shift the core (2) with the pin (3) and unscrew the locking screw (4).
- Unscrew the pin (3) in the core (2) in the “A” direction up to the stop.
- Push the core (2) into the magnet (5) in the “B” direction up to the stop.
- In this position, set the maximum top roller lifting in the “B” direction.
- Screw on and tighten the arresting screw (4).
- Screw on the cap (1).

www.promelectroavtomat.ru

5.3 Setting the electromagnet current

The time response of the current of electromag. has 2 phases:
- initial switching on (0,2 ÷ 0,5 s) - the maximum force
- maintaining (when keying)

It is necessary to set max. 40 % of keying (see instructions for use of the stopmotor). With a higher value thereof and with a long period of the presser foot in its lifted position there is a danger of electromagnet overheating.

5.4 Aseembly of the top roller lifting electromagnet

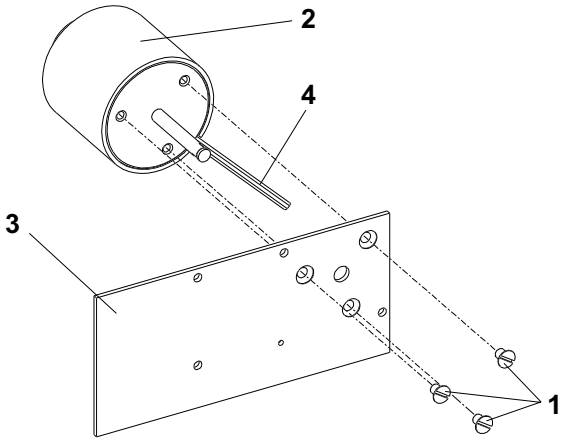

Caution! Danger of injury!
Switch off the main switch! Before starting the setting operation, wait until the motor stops!

- Remove the rear guard (3).
- Using the screws (1),fasten the electromagnet(2) on the rear guard(3) with the given orientation of the outlet cable(4).
- Mount the rear guard (3).
- Connect the outlet cable (see par.7).
- Set the pin of the electromaghet (see par. 5.2).
- Set the current of the electromagnet (see par.5.3).

6. Backtacking using electromagnet

6.1 Description

The position of the electromagnet with regard to the backtacking lever must be set in such a way that it enables the maximum stitch length when sewing in forward and in rearward sense. If this position is not correct, the length of the stitch will be shortened in one or the other feed direction.

6.2 Electromagnet height setting

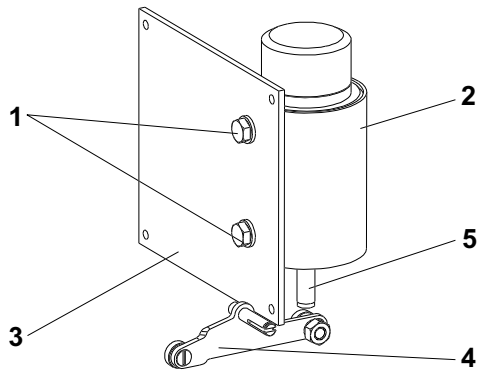

Caution! Danger of injury!
Switch off the main switch! Before starting the setting operation, wait until the motor stops!

- Set the position of the electromagnet (2) in the upper position of the grooves of the guard (3).
- Proceed to the mounting of the guard (3) with the magnet on the machine head.
- Set the maximum stitch length and push the reverse stitching lever into its bottom position (as with the reverse stitching operation).
- In this position, the bar (5) must be in contact with the roller (4) of the lever (6). Otherwise shift the electric magnet (2) in the grooves of the guard (3).

6.3 Setting the position of push-buttons

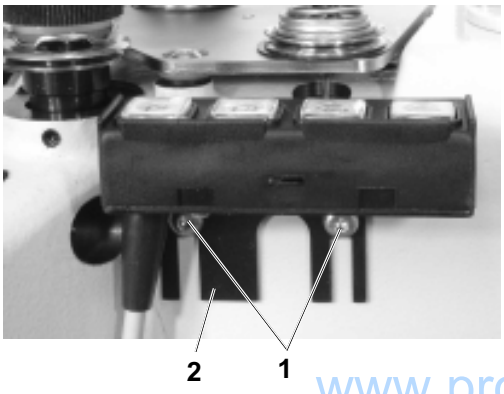

Caution! Danger of injury!
Switch off the main switch! Before starting the setting operation, wait until the motor stops!

- By loosening the screws (1), it is possible to set the position of the holder of the push-buttons (2) in the sense of sewing.

6.4 Change of the function of push-buttons

The Function of the push-buttons can be changed in accordance with the possibilities given by the stopmotor (see instruction for use of stopmotor).

www.promelectroavtomat.ru

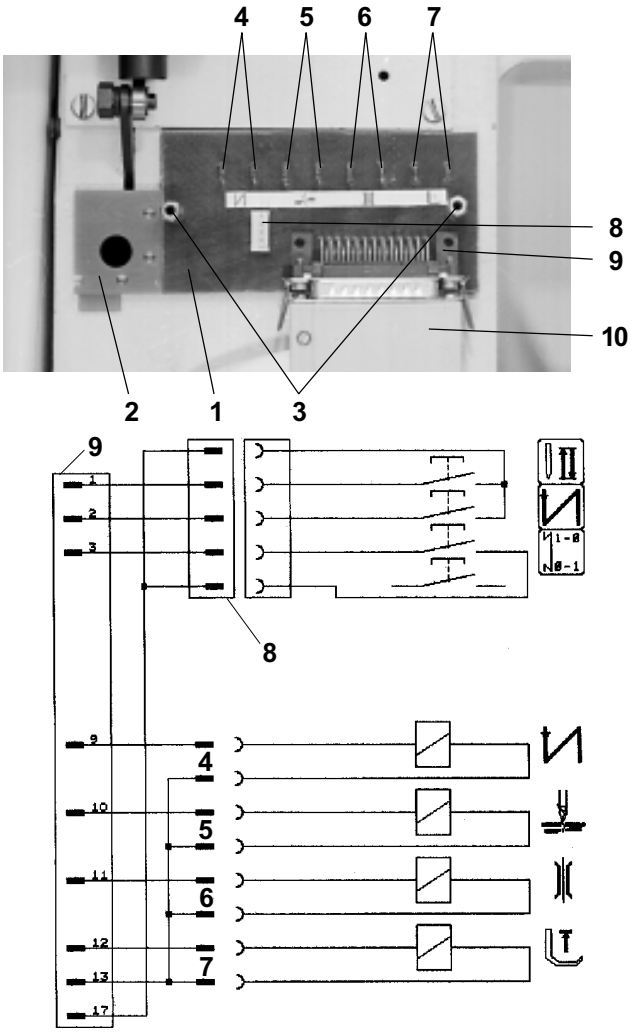

7. Connecting the electric elements on the machine head

The connection of the electric elements (electromagnets, backtacking, presser foot lifting, thread trimming, loosening of the tensioner and push-buttons) is made by means of a switchboard (1) fixed with its supporting plate (2) on the rear side of the head by means of two distance screws (3) (In the Fig., these electric elements are disconnected).

Connecting spots :

4 - backtacking electromagnet
5 - trimming electromagnet
6 - tensioner loosening electromagnet
7 - presser foot lifting electromagnet
8 - connector of push-button connecting
9 - connector of coupling the head with the stopmotor
10 - connecting cable of the head and stopmotor

Wiring diagram of connecting the electric elements of the machine head.

8. Drive, control panel, position sensor

The detailed information concerning the drive, the control panel and the setting of the position sensor is given in the manual of the drive and of the control panel.

www.promelectroavtomat.ru

9. Maintenance



Caution! Danger of injury!
The maintenance operations should be performed only with the machine switched off and with the motor stopped!

In the following table there are given the operations which should be performed and the respective time intervals between the individual operations.

Operation	Time interval
Removal of the throat plate and its cleaning out.Cleaning out of the wheel feeder, hook and their surrounding space. Removal of the residues of material and threads from the top roller.	1 day
Checking the oil level in oil reservoirs.	1 month
Checking the hook wear. Checking the function of the safety clutch against the hook overload.	6 months
Checking the V-belt and the indented belts .	1 year

10. Setting the machine according to the sewing category

10.1 Introduction

This sewing machine enables sewing operations within a large extent from the light up to the heavy-duty sewing. The parameters of the respective sewing operation must be in accordance with the given machine setting which includes also the replacement of some components, such as the needle, the throat plate insert.
For this reason, the setting of the machine is divided into 4 categories:
1 ... light sewing
2 ... medium sewing
3 ... medium heavy-duty sewing
4 ... heavy-duty sewing
In the factory, where this machine has been manufactured, the machine has been set with respect to the standard parameters of the required sewing category which is designed by the number included in the commercial designation of the machine. If the user desires changing the given setting to another sewing category, this operation should be performed by a specialized mechanician.

The standard parameters of sewing are described in the following paragraph. The actual parameters of sewing inside the given sewing category may be different, which means that the machine operative must adapt respectively the setting of the machine, e.g. the tension of the upper thread.

www.promelectroavtomat.ru

10.2 Table of setting the machine according to the sewing category

Commercial designation of the machine 1180i - 5XX - X

Sewing category	Standard sewing parameters				Standard machine setting 1)											
	Thickness of one material layer 2)	Number of material layers	Stitch length	Label number of thread PES	Needle size 7)	Sewing speed	Position of feeding lever pin	Width of needle plate insert	Feeder - pitch of teeth hole 8)	Presser top roller diameter	Presser top roller position	Thread tension 4) needle thread	Thread tension 4) hook thread 6)	Splice of hook		
																	
	m m		m m		0.01 mm	SPM		m m	m m	m m	m m	N	N			
-100	0.8	2	1.7	70	80	2500	1	1.2	0.6	35	10.5	3	1	● 9)	●	
-200	1	2	2.5	40	100	2500	1	1.5	0.6	35	10.5	4,5	1.5	● 9)	●	
-300	1.5	1-2	3.5	20	130	1600	1	2	0.6	35	10.5	5-8	2		●	
-400	2	1-2 or 2-3	5	10 (20) 5)	160	1600	2 3)	2.4	1.2	35	10.5	10-12	2-2.5		●	

Setting as per chapter												
Instructions for service			3.5.3.1.2	3.3.2	3.5.3.2.2	3.6.6.1	3.6.6.2					
Instructions manua	6.5							6.4	6.4			
Instructions for assembling		2.4 4.5										

1) The standard setting of the machine for the categories 3 and 4 concerns a decorative stitching, when it is difficult to match a good stitch interlocking with a faultless function of the thread trimming device. Otherwise, when sewing material of considerable overall thickness, it will be necessary to increase the overtopping of the teeth above the needle plate and to increase also the needle thread tension.
2) The thickness of a layer is measured using an engineer slide calliper with the pressure of jaws of about 10 N.
3) If the user will agree with the maximum stitch length of 5 mm, the pin of the feeding lever can be left in the position 1.
4) The values of tension are only orientative ones and it is necessary to adapt especially the tension of the hook thread according to the stiffness of the material. An excessive tension of the threads when sewing soft materials causes material wrinkling.
5) When performing decorative sewing, it is possible to use the hook thread having the label No 20 - the interval between the two replacements of the hook bobbin will be double.
6) When changing markedly the sewing category together with changing the tension of the hook thread, it is necessary to modify the tension of the retaining spring of the trimming device according to the paragraph 4.7.
7) When changing markedly the sewing category together with a marked change of the needle number, it is necessary to correct the setting of the distance of the hook from the needle, according to the paragraph 3.1.3.
8) There are in use various types of feeders with the purpose of avoiding imprinting the teeth in the lining leather. Otherwise, it is possible to use any feeder.
9) The splice with the so-called spur may be used with the sewing categories 100 and 200 and is designed for sewing thin materials.
   In the production factory , the gib without spur is mounted as standard.
   When using the gib with the so-called spur, we recommend carrying out the setting of the pin of the thread mechanism (par. 3.2.4) for the sewing category 400.

www.promelectroavtomat.ru