Instruction manual

2180

Minerva Boskovice, a.s., Sokolská 60, CZ - 680 17 Boskovice
Tel.: +420-516-453434, 453433, 494111 • Fax: +420-516-452165 • http://www.minerva-boskovice.com

www.promelectroavtomat.ru

Edition/Vydáno/Herausgegeben/Edition/Editado: 05/2009 Printed/Tisk/Druck/Imprimé/Impressão: Czech Republic S735 000740

Contents - part A - Instruction manual:

1. Proper use of the machine 1

2. Description of the machine 1

3. Sewing categories 2

4. Survey of equipment 2

4.1 Equipment necessary 2

4.1.1 Needles 2

4.1.2 Wheel feeders 2

4.1.3 Top roller holders 2

4.1.4 Top rollers 2

4.1.5 Throat plates 2

4.2 Optional equipment 2

5. Technical data 3

6. Operation of the machine 4

6.1 Threading a thread 4

6.2 Bobbin thread winding 4

6.3 Inserting the bobbin and threading the lower thread 4

6.4 Regulating the thread tension 5

6.5 Needle replacement 6

6.6 Regulation of pressing the top roller 6

6.7 Lifting the top roller up 6

6.8 Stitch length adjustment 7

6.9 Safety clutch 7

7. Maintenance 8

Operating instructions for eventual trouble shooting 9

www.promelectroavtomat.ru

Foreword

This instruction manual is intended to help the user to become familiar with the machine and take advantage of its application possibilities in accordance with the recommendations.

The instruction manual contains important information on how to operate the machine securely, properly and economically. Observation of the instructions eliminates danger, reduces costs for repair and down-times, and increases the reliability and life of the machine.

The instruction manual is intended to complement existing national accident prevention and environment protection regulations.

The instruction manual must always be available at the machine/sewing unit.

The instruction manual must be read and applied by any person that is authorized to work on the machine/sewing unit. This means:

- Operation, including equipping, troubleshooting during the work cycle, removing of fabric waste
- Service (maintenance, inspection, repair and/or)
- Transport.

The user also has to assure that only authorized personnel work on the machine.

The user is obliged to check the machine at least once per shift for apparent damages and to immediatly report any changes (including the performance in service), which impair the safety.

The user company must ensure that the machine is only operated in perfect working order.

Never remove or disable any safety devices.

If safety devices need to be removed for equipping, repairing or maintaining, the safety devices must be remounted directly after completion of the maintenance and repair work.

Unauthorized modification of the machine rules out liability of the manufacturer for damage resulting from this.

Observe all safety and danger recommendations on the machine/unit! The yellow-and-black striped surfaces designate permanend danger areas, eg danger of squashing, cutting, shearing or collision.

Besides the recommendations in this instruction manual also observe the general safety and accident prevention regulations!

www.promelectroavtomat.ru

General safety instructions

The non-observance of the following safety instructions can cause bodily injuries or damages to the machine.

1. The machine must only be commissioned of the instruction book and operated by persons with appropriate training.
2. Before putting into service also read the safety rules and instructions of the motor supplier.
3. The machine must be used only for the purpose intended. Use of the machine without the safety devices is not permitted. Observe all the relevant safety regulations.
4. When gauge parts are exchanged (e.g. needle, presser foot, needle plate, feed dog and bobbin) when tread-ing, when the workplace is left, and during service work, the machine must be disconnected from the mains by switching off the master switch or disconnecting the mains plug.
5. Daily servicing work must be carried out only by appropriately trained persons.
6. Repairs, conversion and special maintenance work must only be carried out by technicians or persons with appropriate training.
7. For service or repair work on pneumatic systems the machine must be disconnected from the compressed air supply system. Exceptions to this are only adjustments and functions checks made by appropriately trained technicians.
8. Work on the electrical equipment must be carried out only by electricians or appropriately trained persons.
9. Work on parts and systems under electric current is not permitted, except as specified in regulations DIN VDE 0105.
10. Conversion or changes to the machine must be authorized by us and made only in adherence to all safety regulations.
11. For repairs, only replacement parts approved by us must be used.
12. Commissioning of the sewing head is prohibited until such time as the entire sewing unit is found to comply with EC directives.



It is absolutely necessary to respect the safety instructions marked by these signs.
Danger of bodily injuries !
Please note also the general safety instructions.

IMPORTANT WARNING!

To the feeding network cord, it is necessary to connect the respective network plug which has been approved in the country of utilizing the machine. This operation should be performed by a worker acquainted with the electric safety rules being in force in the given country. The supplier is not responsible for any damages caused by defective plug or owing to incorrect assembly of the plug.

In spite of all safety measures made on the machines, inappropriate actions of the operator may lead to dangerous situations. In industrial sewing machines, attention should be paid to the following still remaining possible sources of injury:

1. Moving sewing needle
   - risk of injury when sewing with raised pressure foot or top roller, because the finger guard is then positioned too high.

2. Moving thread take-up lever
   - risk of injury when inadvertently or intentionally inserting the finger(s) between the thread take-up lever and its guard.

3. Moving pressure member
   - risk of injury when holding sewn work in immediate vicinity of the pressure member and beginning to insert under the pressure member a considerably thicker sewn work portion,
   - risk of injury when sinking the pressure member.

4. When switched off, the clutch motor slows down by inertia but would be reactivated by an accidental tread-ing down of the motor treadle. To avoid such risk, it is advised to hold the handwheel by hand and slightly to depress the motor treadle.

www.promelectroavtomat.ru

Part A - Instruction manual
1. Proper use of the machine

The machine can be used in the shoemaking industry for sewing of light medium and heavy shoe uppers. It is suitable for sewing natural and man made leathers, shoemaking textiles and even plastic parts of sports shoes.
The machine is also used in the fancy goods industry for sewing bags, handbags, rucksacks and cases from the usual fancy goods materials.
The machine sews with a double needle stitch. It is standardly equipped with needles of the 134 LR system which are suitable for sewing leather. When sewing textile materials it is necessary to install the needle of the 134 system. The machine enables the sewing of both technical and decorative seams which have almost the constant length of the stitch at a different sewing speed. Only a dry material, which cannot be thicker than 8 mm when depressed by top roller, can be sewn by these machines, generally. The material cannot contain any hard subjects, to the contrary case it is possible to work only with applied eye-protective shield. Such a shield is not available to delivery at this time. Generally threads up to size 1000 dtex x 1 x 3 (Labelled number 10) have been used namely synthetic, cotton or core threads. Whoever should like to use other special threads, that one should consider the resulting risks and make appropriate safety measures.
The total thickness is determined by sewing with a thicker needle of very strong material. In cases like this it is also necessary substantially reduce the speed of sewing below the value shown in paragraph 5.
These special machines may be installed a operated only in dry and kept up expanses. We, as industrial sewing machines manufacturers, agree with the fact that our products are operated, at the least, so far learned operators who can carry out all usual operating functions and suppose their possible risks as perceptible.

Machine noisiness

Machine noisiness has been measured in accordance with the standards ISO 3746, ISO 11204 at maximum speed.
Laeq = equivalent machine noise of the self-standing machine on the working place, converted to % machine employment (dB) - stated in the table

Type of the machine-subclass-sewing category	Noisiness dB	% machine employment
2180-111-100	80	20
2180-111-200	79	20

2. Description of the machine

It is single needle machine. It sews with a double threaded lock-stitch. It has a lower circular feed, needle feed and a top roller which is driven. There are two possibilities for feeding. At the first step it feeds a lower circular feed, needle and top roller. Secondly it feeds only the circular feed and the top roller (the needle is above the throat plate). The stitch length can be adjusted with an adjusting dial.

The machine is provided with a vertical hook of standard diameter which is secured with an safety clutch. The hook may be either Desheng DSH-820 (lubricated path of bobbin case lifter) or Minerva R 810 (lubricated path of bobbin case lifter and path of the bobbin case).
The machine uses a wick lubrication system with central oil supply. The hook is lubricated from an independent oil source.
The machine is provided with a standard knee-operated lever for top roller lifting. As an option and for the Czech Republic, with a pedal for top roller lifting.
The maschine can be delivered in two sewing categories. Sewing category is determined by the number of the thread label and the corresponding number of the needle. The machine is adjusted in the factory so that it corresponds to the ordered sewing category. Changes of adjustment can be carried out only by a skilled and trained mechanic.
A stand is equipped with a lever clutch motor.

www.promelectroavtomat

3. Sewing categories

This indication includes the equipment assembled on the machine head, both necessary equipment and optional equipment. The standard configuration of the equipment has been preset, according to the under mentioned table, in the factory which includes only necessary equipment. If the buyer demands a different configuration then the factory allocates a new indication.

Standard configuration - the numbers in brackets stand for ordering Nos. when ordering separately the Equipment in question.

Type Class-subclass -sewing category	Needle size 0,01mm	Top roller Diameter mm	Wheel feeder Pitch of teeth mm	Throat plate Width of hole mm
2180-111-100	100	35	0,6	1,5
	(S548 134001)	(M 173)	(M 059)	S080 811897
2180-111-200	130	35	1,2	2,4
	(S548 000311)	(M 173)	(M 058)	S080 811898

4. Survey of equipment

This survey does not include the equipment assembled on the stand.

4.1 Equipment necessary (at least one of each from the following group of equipment is assembled)

4.1.1 Needles

M 023 - needle 134 LR size 100
M 021 - needle 134 LR size 130

4.1.2 Wheel feeders

M 060 - wheel feeder with pitch of teeth 0.4 mm
M 059 - wheel feeder with pitch of teeth 0.6 mm
M 058 - wheel feeder with pitch of teeth 1.2 mm

4.1.3 Top roller holders

M 156 - holder for the top roller ø 25 mm
M 157 - holder for the top roller ø 35 mm
M 295 - holder for the top roller ø 45 mm

4.1.4 Top rollers

M 172 - top roller ø 25 mm
M 173 - top roller ø 35 mm
M 174 - rubberized top roller ø 25 mm
M 175 - rubberized top roller ø 35 mm
M 310 - smooth top roller ø 25 mm
M 311 - smooth top roller ø 35 mm
M 296 - top roller ø 45 mm - width 2.0 mm
M 297 - top roller ø 45 mm - width 3.8 mm

4.1.5 Throat plates

S080 811897 - throat plate (for needle 60 - 110)
S080 811898 - throat plate (for needle 110 - 160)

4.2 Optional equipment

M 010 - built-in lighting (including transformer 230/12V)
M 018 - sewn work guide
M 149 - sewn work guide
S794 222012 - halogen lighting (12 V, 20 W - contains transformer)

www.promelectroavtomat.ru

5. Technical data

Sewing category	Material sewn		Stitch length		Labelled number of polyester thread		Number of needle		Sewing speed		Hook
	Standard										
	Thickness of one layer	Number of layers	Standard	Maximum	Standard	Range	Standard	Range	Standard	Maximum *	Alternative
	mm	-	mm	mm	-	-	0,01mm	0,01mm	SPM	SPM	
-100	1	2	1,7	3	40	80-30	100	60-110	2500	3000	DESHENG DSH- 820 MINERVA R 810
			5	7					1600	2000	
-200	1,5	1-2	3,5	5	20	25-10	130	110-160	1600	2000	
			5	7					1200	1600	

* The maximum sewing speed for the given maximum stitch length and needle number should not be exceeded. There is a menace of excessive machine wear.

Stitch type	Double thread lock-stitch
Top roller stroke	6 mm - via hand lever 12.5 mm via knee lever, treadle
Hook	DESHENG DSH-820, MINERVA R 810
Needle	System 134 LR; 134 KKLR; 134
Driving unit	Lever clutch 4 poles change motor min. 0.4 kW, lewer clutch 2 poles change motor min. 0.4 kW
Weight of the head	max. 44 kg
Weight of the stand	max. 61 kg
Height of post bed	173 mm
Opening space of machine head	270 x 298 mm
Dimension of bed plate	178 x 518 mm
Input machine	max. 300 W
Equivalent accoustic presser level of the sole machine at work place by 20% use of the machine during a shift under standard sewing conditions	82 dB/A
Layout dimensions of the machine (including the stand)	1060 x 550 mm
Height of the machine (including the stand)	1680 mm

www.promelectroavtomat.ru

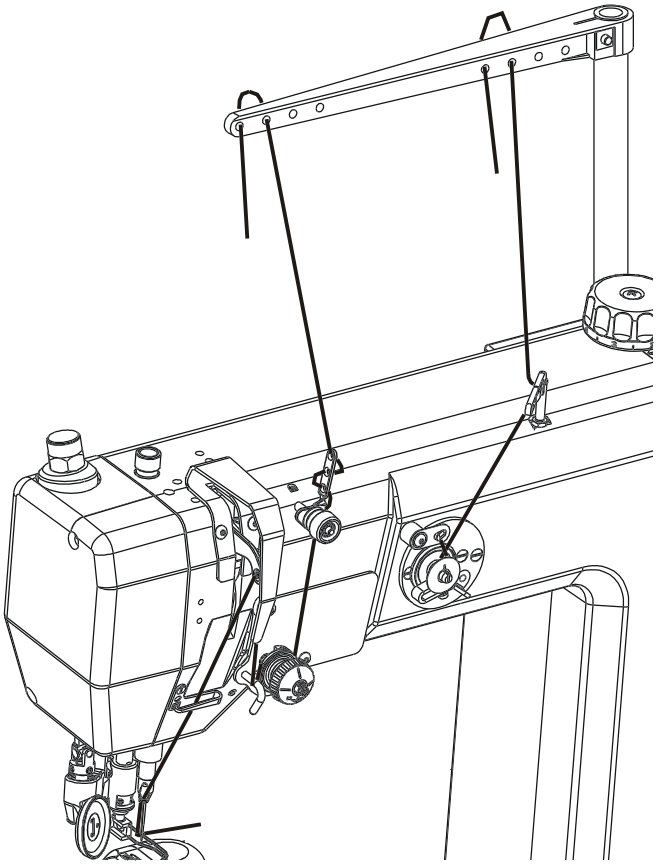

6. Operation of the machine

6.1 Threading a thread



Caution! Risk of injury!
Before threading a thread, turn the main switch off and wait until the machine stops!

Thread the threads as it is shown in picture.



Caution!
Not following the correct method of threading a thread may cause serious damage to the function of the machine.

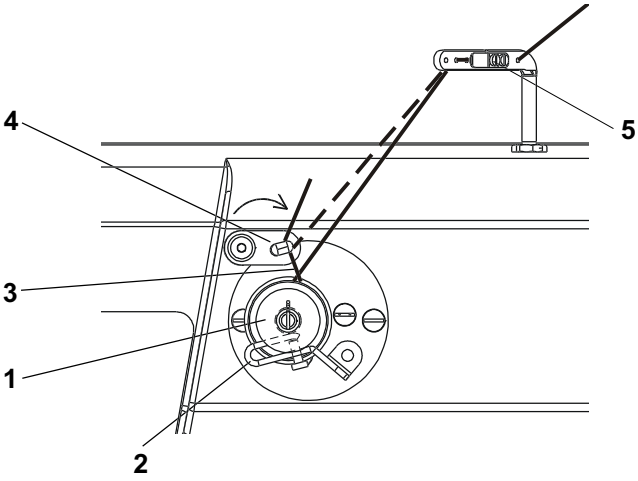

6.2 Bobbin thread winding

- Insert the bobbin (1).
- Spool counter-clockwise manually onto the bobbin, minimum six threads of the lower thread (3).
- Insert the thread ends into the equipment (4) and cut off the ends.
- Press the lever (2) until it reaches its limit.
- Switch on the machine.
- The winder will automatically switch off after winding.
- Take off the hook bobbin and cut off the end in the equipment (4).
- The screw (5) is instrumental to thread tension control for winding. Turning clockwise sense the thread tension is increased and the single threads are more firmly fixed on the bobbin.
- The tension cannot be so extensive as far as slipping of the winder friction drive has occured.

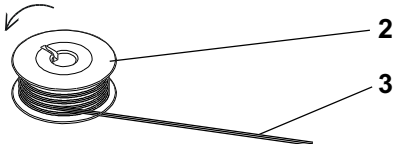

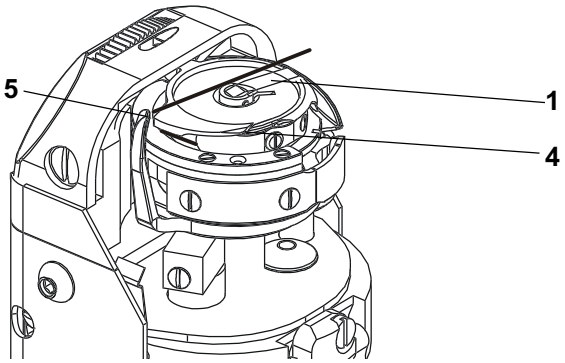

6.3 Inserting the bobbin and threading the lower thread



Caution! Risk of injury!
Turn the main switch off and wait until the motor stops!

- Tilt the shutter (1) up.
- Insert the bobbin (2) with thread end (3) in the direction as shown in the picture.
- Thread the thread through the notch (4) and the space (5).
- By means of the upper (needle) thread, pull the lower thread above the throat plate.

www.promelectroavtomat.ru

Fitting seam

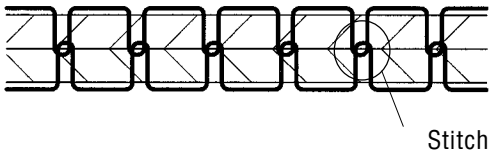

Stitch knitting

Decorative seam

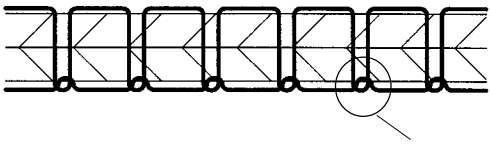

Stitch knitting

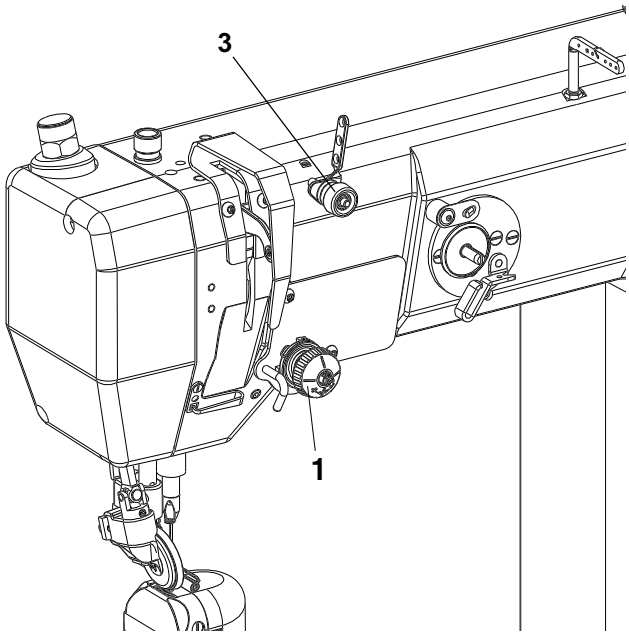

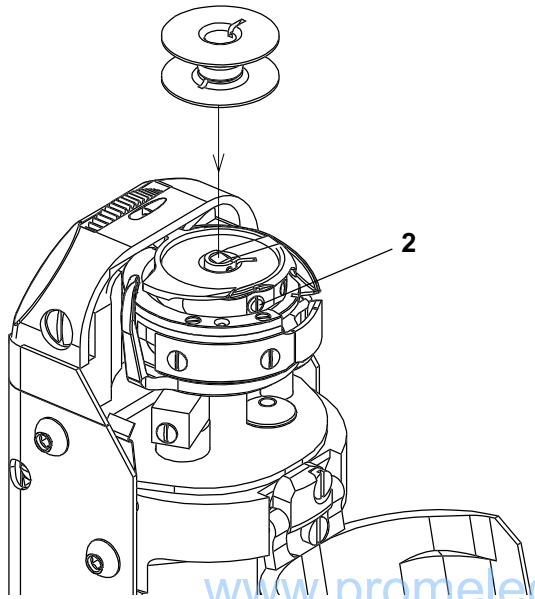

6.4 Regulating the thread tension

The thread tension must conform to the thickness of the sewn threads, thickness and hardness of sewn material (thin and soft material will fold with high tension) and the kind of seam. An ordinary fitting seam should be formed with stitches knitted in the middle of the sewn material.

A decorative seam is mostly used with rough threads (10, 20) on thin material and it has tied up threads on the reverse side of the material for achieving a decorative appearance.
Thread tension adjustment is by standard sewing (par. 5, seite 3) conditions in accordance with table.
If achieving of a decorative seam with stitch knitting on the underside is wished, it is necessary to decrease the upper thread tension, it is carried out by turning of nut (1), in the counter-clockwise sense.

IDENTIFIED VALUES

Thread tension

Labelled No. of polyester thread	Kind of seam	Tension of upper thread	Tension of lower thread
		N	N
70	-	3	1
40	-	4,5	1,5
20	fitting	8	2
	decorative	5	
10 upper 20 lower	fitting	12	2
	decorative	10	2,5

Measurement of tension is done by dynamometer.

Warning:
The upper thread tensioner is released with each top roller lifting. In this case, the tension of the upper thread cannot be measured.

Regulating the thread tension

Caution! Risk of injury!
Before regulating the lower thread tension, turn the main switch off and wait until the motor stops.

The upper thread tension is adjusted with nut (1). Its clockwise turning increases the tension.
The lower thread tension is adjusted with a screw (2). Its clockwise turning increases the tension.
Tension correlation rate defines the depth of the seam tied through. The result of raising the upper tension will be the decreasing depth of tie through. The opposite will apply with the lower thread.

www.promelectroavtomat.ru

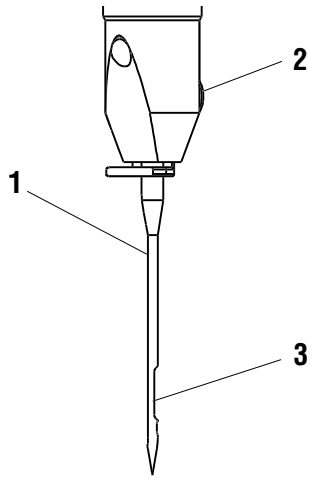

6.5 Needle replacement

Caution! Risk of injury!
Before removing and inserting the needle turn the main switch off and wait until the motor stops!

- Turn with the hand wheel as far as the top needle (1) position has been reached.
- Loosen the screw (2) and take the needle out.
- When inserting a new needle, care is to be taken that groove (3) above the needle's eye was in the same direction as the hook.
- Tighten the screw (2).

The inserted needle must respond to the sewing category according to paragraph No. 5, seite 3. Otherwise it will cause damage to sewing, or eventually the machine could be broken.

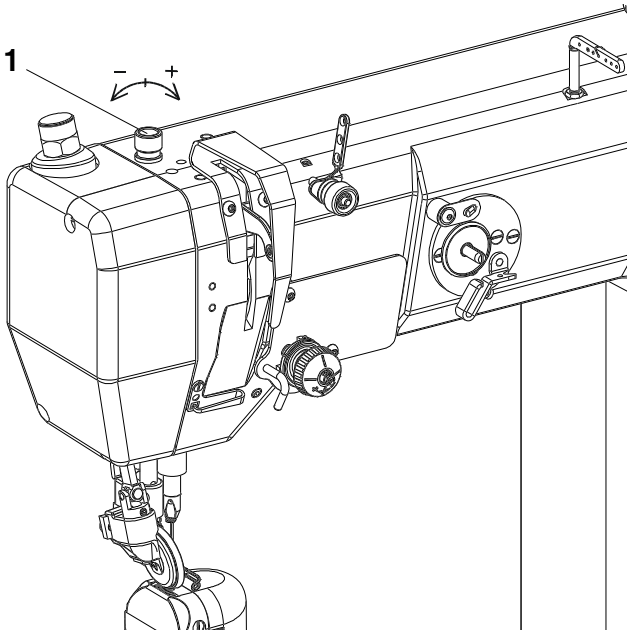

6.6 Regulation of pressing the top roller

The pressing of the top roller should be as low as possible but on a level so that the top roller would not fly over when needle comes off the material and that the feeding power got over the thread pull by stitch tightening.
By turning of the screw (1) clockwise pressing of the top roller has been increased, by counter-clockwise turning pressing of the top roller has been decreased.

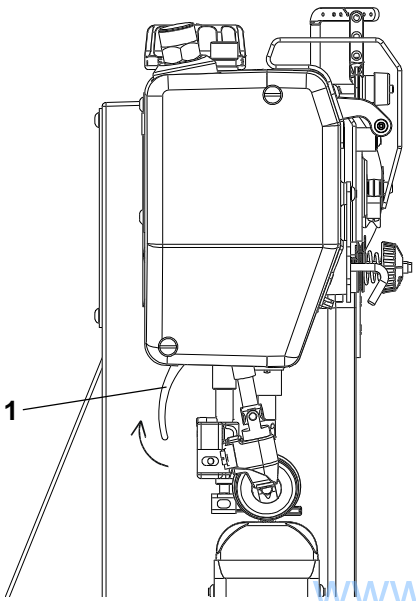

6.7 Lifting the top roller up

Mechanical lifting of the top roller is enabled by means of the hand lever (1), which contemporarily, after it has been lifted in the arrow direction, is locking the top roller in its top position and turning (adjustment) of the machine is possible. The top roller can be lifted via knee lever or left treadle.

When lifting top roller via knee lever or the treadle, the needle must be in the upper position and the machine has to come to a full stop.

www.promelectroavtomat.ru

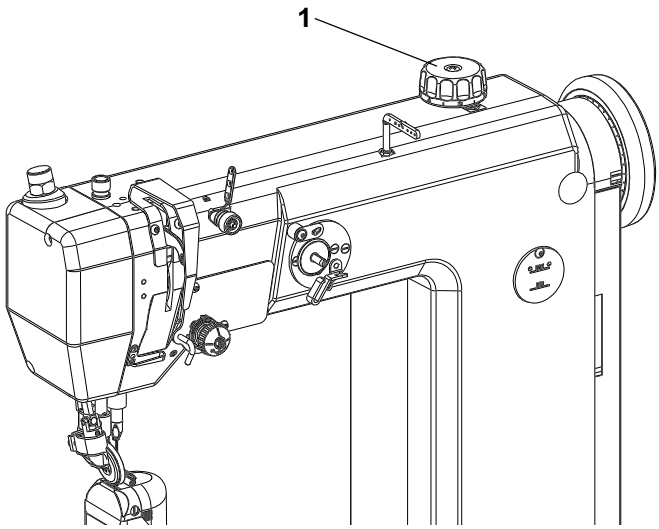

6.8 Stitch length adjustment

Stitch length adjustment is by dial (1) by its turning. Turning clockwise stitch length is decreased, turning counter-clockwise stitch is length increased.

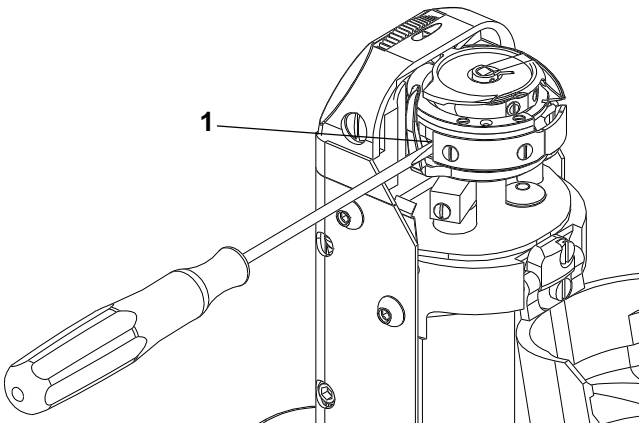

6.9 Safety clutch

The machine is provided with a safety clutch which disengages the driving unit, when the hook is blocked. Reconnection must be done in the following way:

Caution! Risk of injury!
Before assembly turn the main switch off and wait until the motor stops!

- Turn the manually operated wheel as far as you can reach the suitable point for inserting a screwdriver into the space(1).
- Continue turning the manually operated wheel in direction of the arrow located on it, until you feel the drop in of the safety clutch.

www.promelectroavtomat.ru

7. Maintenance

Caution! Risk of injury!
Maintenance work can only be carried out when the machine is off and the motor stops.

Maintenance work which must be carried out and the intervals between them and set out in the following table.

Maintenance work	Interval
Removing throat plate and its cleaning. Cleaning of circular feed dog, hook and space around feeding wheel of material and thread residues. To clean it, use brush. It is prohibited to use compressed air for cleaning without protective guards preventing injury of persons with flying impurities. Lubrication of the hook path a few oil drops.	1 day
Checking the oil level in the hook lubrication oil tank. Checking the oil level in the oil tank of the central distribution.	1 month

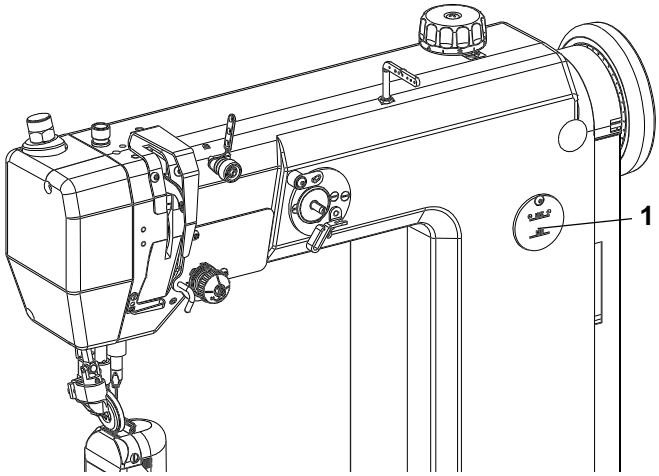

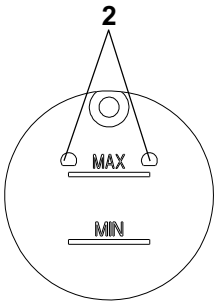

For the lubrication of this machine Esso SP-NK 10, DA 10 or an equivalent quality lubricating oil is recommended (viscossity at 40° C: 10 mm²/s; flash point: 150°C).
The oil tank (1) of the central distribution is to be filled the hole (2) up to the mark max. The oil tank for lubricating the hook is filled, after having removed the cover cap (3), through the hole (4) up to the top edge.

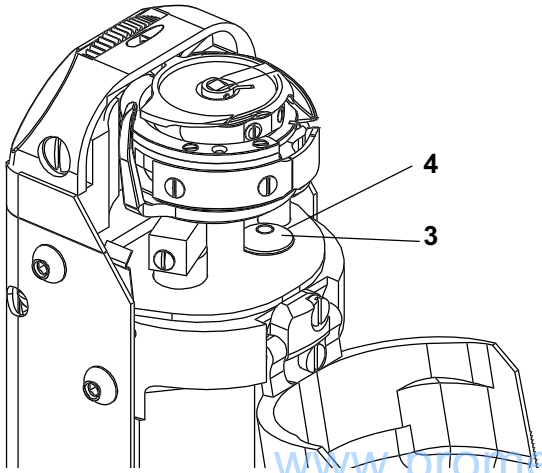

www.profielectroavtomat.ru

Operating instructions for eventual trouble shooting

Meaning of abbreviations: NP - Instruction manual
SK - Instructions for service

Trouble	Cause	Method of troubleshooting
1. Upper thread breaking.	1.1 Incorrect threading of the upper thread.	Thread the upper thread according to NP, par. 6.1.
	1.2 Excessive thread tension.	Set the tension according to NP, par. 6.4.
	1.3 Needle incorrectly inserted or damaged.	Replace needle according to NP, par. 6.5.
	1.4 Needle thickness does not suit to that of thread or sewn material.	Use a thicker needle.
	1.5 Hook point sticks the thread.	Set distance between hook and needle according to SK, par. 3.1.3 and 3.1.5.
	1.6 Needle thread excessively elastic.	Increase the hook timing and set the needle bar height according to SK, par. 3.2.3.
	1.7 Low quality thread.	Replace thread.
	1.8 Needle thickness unsuitable for the piercing hole in the throat plate.	A suitable throat plate is to be used.
	1.9 Piercing hole of the throat plate damaged.	Replace the throat plate.
	1.10 Incorrect setting of opening bobbin case lifter (little opening).	Set according to SK, par. 3.1.6.
2. Lower thread breaking.	2.1 Incorrect threading.	Thread according to NP, par. 6.3.
	2.2 Damaged bobbin.	Replace bobbin.
3. Stitch skipping.	3.1 Needle incorrectly inserted.	Insert needle according to NP, par. 6.5.
	3.2 Too big distance between needle and hook point.	Set according to SK, par. 3.1.3 and 3.1.5.
	3.3 Incorrectly set needle hook timing or needle height.	Set according to SK, par. 3.1.4 and 3.2.3.
	3.4 Excessively elastic material or excessively elastic thread.	Increase timing as needed and set the needle bar height according to SK, par. 3.2.3.
	3.5 Damaged hook point.	Replace hook.
4. Incorrect stitch locking. Threads are locked on top side of sewn material.	4.1 Lower thread tension.	Set according to NP, par. 6.4.
	4.2 Incorrect threading and tension setting of upper thread.	Thread according to NP, par. 6.1 set according to NP, par. 6.4.
5. Incorrect stitch locking. Threads are locked on bottom side of sewn material and increasing of tension is of upper thread no help.	5.1 Upper thread out of tensioning dishes.	Thread correctly according to NP par. 6.1.

www.promelectroavtomat.ru

	5.2 Opening bobbin case lifter incorrectly set (it opens too little).	Set according to SK, par. 3.1.6.
	5.3 Wheel feeder too low - difficult passage of thread between sewn material and throat plate.	Set wheel feeder height according to SK, par. 3.5.3.2.1.
6. Stitches insufficiently tightened and with irregular positioning. Thread unravelled.	6.1 Low tension of upper and lower threads.	Set tension according to NP, par. 6.4.
	6.2 Thin needle with regard to thread thickness.	Use a thicker needle.
7. Sewn material wavy in seam.	7.1 Thread tension to high for sewn material.	Reduce tension of both threads.
8. Difficult and iregular machine feed.	8.1 Wheel feeder too low (especially when sewing soft and thick materials).	Raise feeder more from throat plate according to SK, par. 3.5.3.2.1.
	8.2 Feeder teeth unsuitable (too fine) for sewn material.	Use feeder with larger teeth pitch. Replace according to SK, par. 3.5.3.2.2.
	8.3 Wheel feeder driving chain too tensioned - blocked feeding.	Set chain tension according to SK, par. 3.5.3.2.1.
9. Hook blocked.	9.1 Incorrect lower thread threading when replacing hook bobbin - lower thread caught by hook point.	Thread lower thread according to NP, par. 6.3.
	9.2 Upper thread out of tensioning dishes and 2x caught by hook point.	Thread upper thread according to NP, par. 6.1.
	9.3 Insufficient gap between needle and piercing hole from hook side.	Set side position of the throat plate post according to SK par. 3.3.4.

www.promelectroavtomat.ru

Contents - part B - The instructions for assembling

1. Safety instructions 1

2. The way of machine supply 1
   - *2.1 Complete head with accessories* 1
   - *2.2 Stand* 1
   - *2.3 Motor* 1
   - *2.4 Motor pulley* 2

3. Table top 3

4. Machine assembly 3
   - *4.1 Stand frame assembly* 3
   - *4.2 Assembly of components on the bottom of table top and circuit layout* 3
   - *4.3 Assembly of a table top on a stand frame, assembly of oil tank* 4
   - *4.4 Assembly of machine head onto a stand* 5
   - *4.5 Assembly of motor pulley, belt, belt covers, hand wheel* 5
   - *4.6 Assembly of treadle rod, setting rod, knee lever, thread stand and lighting* 6

5. Examination of sewing 7

Supplement 8

www.promelectroavtomat.ru

Part B - The instructions for assembling with standard drives

1. Safety instructions

Caution !
Assembly of the machine must only be carried out by appropriately trained technician.
Any operations to be performed on the electric installation of the sewing machine are to be done only by a competent electrician.

2. The way of machine supply

The contents of supply will be determined in agreement between the supplier and buyer. There are following possibilities:

2.1 Complete head with accessories

In this case the supply contains:
- Complete head.
- Chosen spare parts in the bag under the presser element (see parts indicated * in catalogue of spare parts).
- Standard accessories (it contains tools-see module in catalogue of spare parts).
- Special accessories (it contains some components of a stand and upper belt cover-see module in catalogue of spare parts).

The supply like this is not complete. Buyer will provide missing components himself or he can put in an extra order to get them according to the following paragraphs.

2.2 Stand

Delivery contains components of a stand, however, without components of a stand included in special accessories supplied with machine head (see par.2.1) and without any electrical components.
If it hasn't been agreed otherwise, the stand is supplied in separate pieces. If the assembled stand is asked, special accessories are used from head supply.

Stand (ordered number S200 010000) contains following items:

MG55 000501	Stand frame
MG53 002501	Big treadle
MG53 007511	Set of parts for a stand
S615 000328	Table top

Equipment for foot lifting by treadle:

S522 000450	Small treadle
S980 060028	Foot lifting rod

2.3 Motor

The supply contains its own motor, switch - circuit breaker, all cabling (except of the plug) and material for connection.
If it hasn't been agreed otherwise, it is supplied in separate pieces.

Motors are chosen according to the following table:

Ordered number	Name	Diameter of pulley /mm	Machine rev. max./min 50 Hz/60 Hz	Approx. specification
S359 600030 63 S359 600030 50 S359 600030 42	FIR 1148 3 x 400/230 V, 2800 RPM, 50 Hz	63 50 42	2500/3000 2000/2400 1600/2000	asynchronous clutch motor; switch-circuit breaker with cabling; connection material
S359 600031 75 S359 600031 63 S359 600031 42	FIR 1147F 3 x 400/230 V, 1400 RPM, 50 Hz	75 63 42	1500/1800 1200/1500 800/1000	asynchronous clutch motor; switch-circuit breaker with cabling; connection material

www.promelectroavtomat.ru

2.4 Motor pulley

The diameter of the motor pulley in mm must be according to the following relation:

$$\text{Diameter of pulley} = 71 \times \frac{\text{sewing speed (st\_min)}}{\text{motor revolutions (rev./min)}}$$

The smallest diameter of pulley is 42 mm considering used V-belt. Belt cover on the motor limits the biggest diameter of pulley to 127 mm.
The pulley for the maximum or other sewing speed will be supplied on express wish of the customer.

Motor pulley diameter

Mains voltage frequency: 50 Hz

		Ordered number/motor pulley diameter	
Machine	Sewing speed (SPM)	FIR 1148/552/3 2800 RPM	FIR 1147F/554/3 1400 RPM
2180-111-100	2000	S359 600030 50/ø 50	
2180-111-200	1200		S359 600031 63/ø 63

The table gives effective pulley diameter which is by 4 to 5 mm lower than the outer diameter.
Note.: The effective diameter of the hand wheel pulley is 71 mm.

Mains voltage frequency: 60 Hz

		Ordered number/motor pulley diameter	
Machine	Sewing speed (SPM)	FIR 1148/552/3 2800 RPM	FIR 1147F/554/3 1400 RPM
2180-111-100	2000	S359 600030 42/ø 42	
2180-111-200	1000		S359 600031 42/ø 42

When the customer requires another sewing speed than standard, he may additionally order another pulley according to the following table:

Motor	Sewing speed 50 Hz	Sewing speed 60 Hz	ø pulley mm	Ordered number
FIR 1148/552/3	1660	1990	42	S980 045548
	1850	2220	47	S980 045377
	1970	2370	50	S980 045491
	2130	2560	54	S980 045361
	2290	2740	58	S980 045472
	2480	2980	63	S980 045378
	2640		67	S980 045476
	2760		70	S980 045370
	2960		75	S980 045384
FIR 1147F/554/3	830	990	42	S980 045548
	930	1110	47	S980 045377
	990	1180	50	S980 045491
	1060	1280	54	S980 045361
	1140	1370	58	S980 045472
	1240	1490	63	S980 045378
	1320	1590	67	S980 045476
	1380	1660	70	S980 045370
	1480	1770	75	S980 045384
	1580	1890	80	S980 045479
	1680	2010	85	S980 045480
	1770	2130	90	S980 045481
	1970	2370	100	S980 045483
	2090	2510	106	S980 045484
	2210	2650	112	S980 045485
	2500	3010	127	S980 045337

www.promelectroavtomat.ru

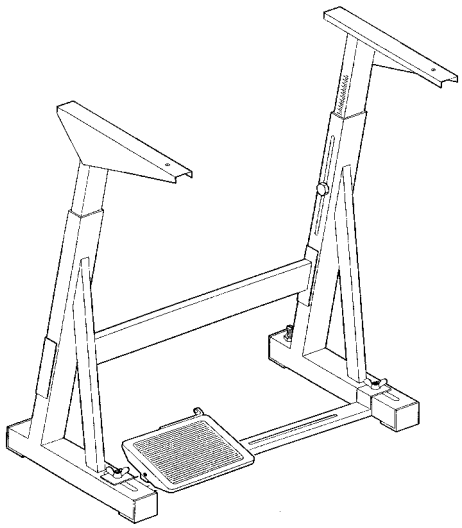

3. Table top

In case buyer will provide his own table top its drawing is shown in supplement.

4. Machine assembly

It is described machine assembly with stand here which is supplied in separate pieces. Otherwise use these instructions adequate.

4.1 Stand frame assembly

A frame is assembled according to the picture.

4.2 Assembly of components on the bottom of table top and circuit layout

- Put down antiskid (rubber) bands on the stand frame.
- Turn the table top up side down and put it down on prepared bands.
- By means of screws screw the drawer (1) down.
- Nail down the rubber stop (2).
- By means of screws fasten transformer for lighting (3) if available.
- By means of screws fasten switch – circuit breaker (5).
- Screw the motor holder down (6).
- By means of clips (7) install transmission line of heavy current conductors. Connection is different from supply voltage and number of conductors of electric supply. In case of quad (four wire) supply 3 x 400 V, transformer for lighting must be supplied with separate supply cable 1 x 230 V.

Caution!
The voltage in the mains must be in conformity with the voltage indicated on the drive plate.

Caution!
The transformer of the bulb for the sewing area is not switched off by the main switch (EN 60204-3-1). Before proceeding to any repair operation in the transformer box (such as a fuse exchange) the plug categorically must be taken out of the socket. Such operations may be carried out only by persons with adequate electrotechnical skill.

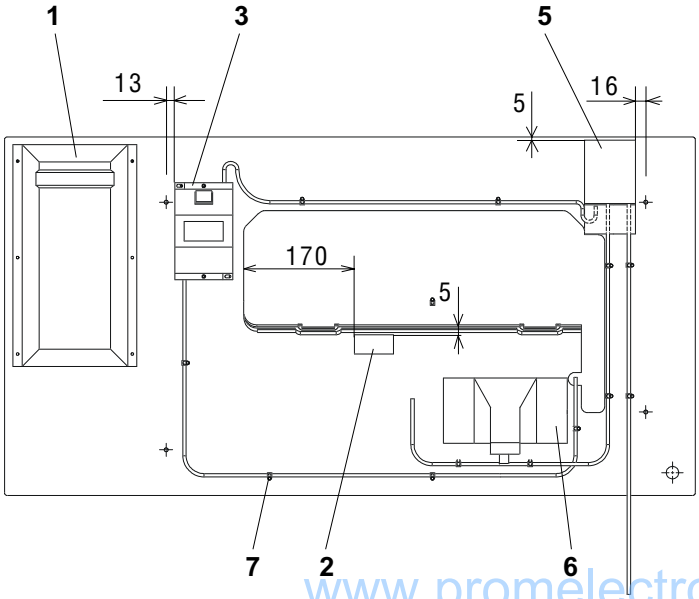

www.promelectroavtomat.ru

Circuit layout - Europe

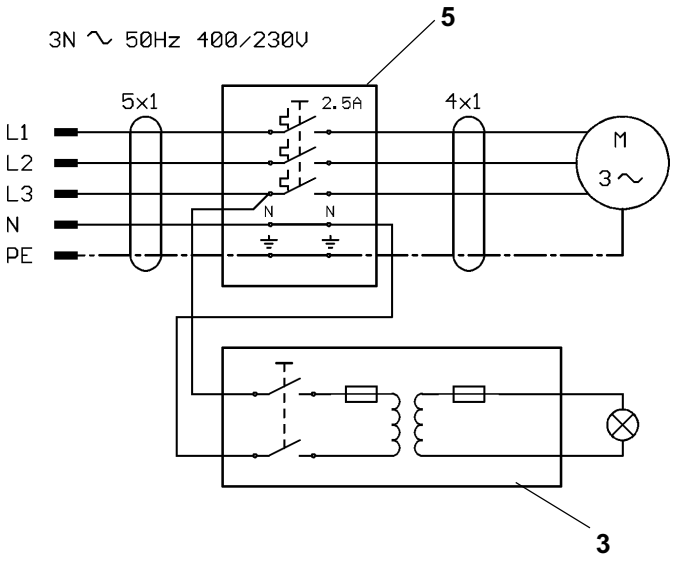

Circuit layout - America

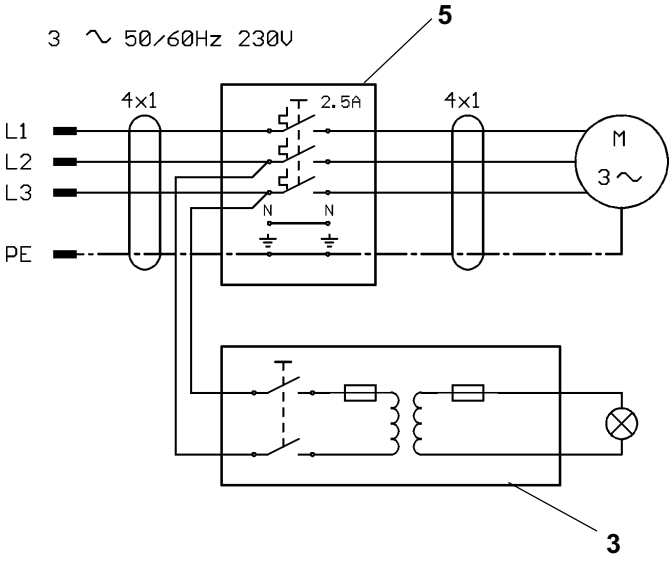

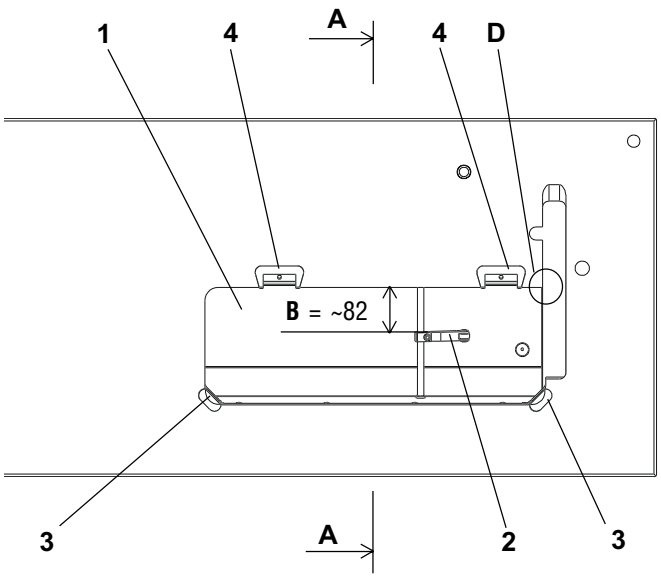

A - A

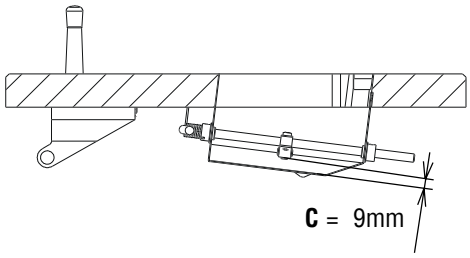

D

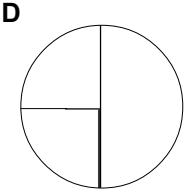

4.3 Assembly of a table top on a stand frame, assembly of oil tank

- Turn the table top around and screw it down to the frame by means of screw ø 8 x 35 mm.
  When applying a frame different from that recommended by the producer, be sure to adapt its position so as to ensure the stability of the machine head in its tilted state.
- Oil tank (1) with assembled lever (2) insert through the bottom part into the cut hole in the table top and put down as shown in detail (D) in that way, that the edge of the tank would fit in with the edge of the cut hole in the table top. Set the height of the tank according to the section A - A. Tank may not protrude out of upper surface of a table top. Nail down the tank with nails ø 2 x 40 mm.
- Adjust the lever (2) to the dimensions “B“ and “C“.
- Insert rubber inlays (3) into the groove in a table top.
- Insert rubber inlays (4) into the groove in a table top and screw by means of wood screws ø 4.5 x 15 mm to the table top.

www.promelectroavtomat.ru

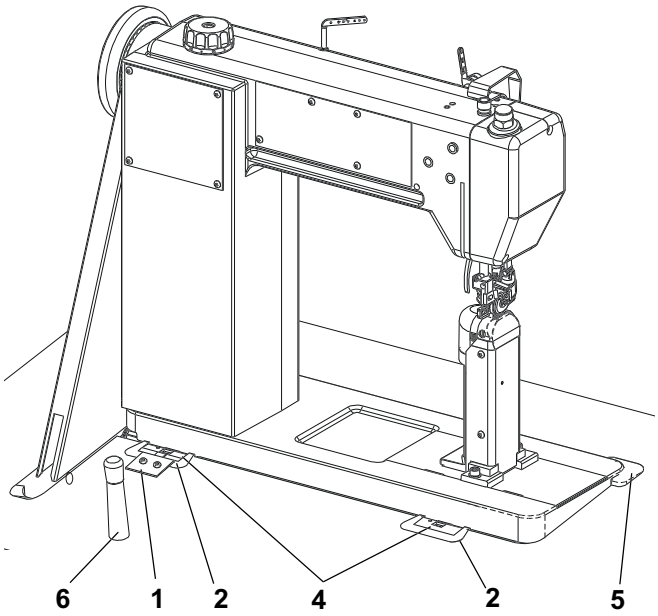

4.4 Assembly of machine head onto a stand

- Mount hangers (4) on the machine head.
- Put the head down into the rubber inlays (2) and (5).
- Screw on the securing plate (1) with two wood screw ø 5 x 30 mm.
- Insert supporting pin (6).

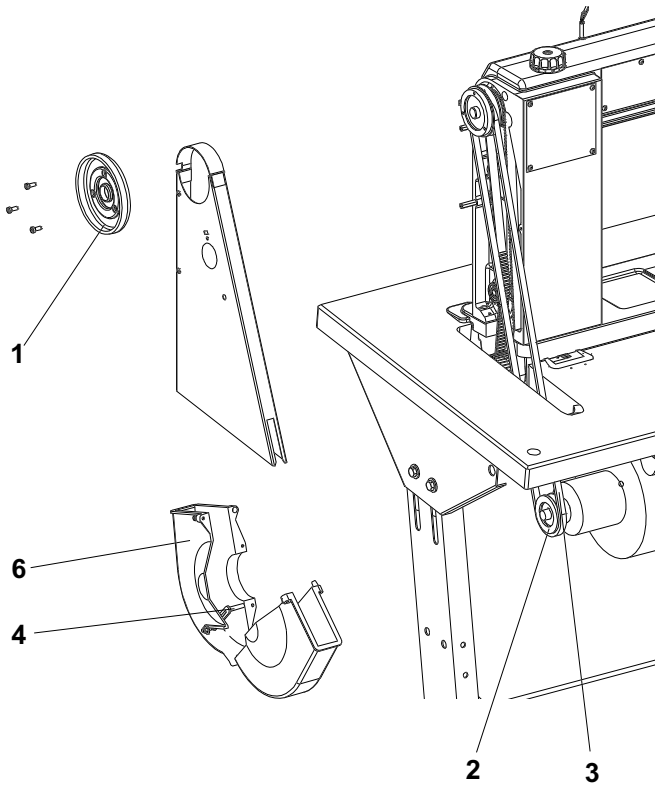

4.5 Assembly of motor pulley, belt, belt covers, hand wheel

- Disassemble hand wheel (1).
- Assemble motor pulley (2).
- Insert V-belt (3) and tighten it by leaning out of the motor. V-belt is tightened correctly when the opposite sides of belt are approaching to each other in distance of about 20 mm with power 10 having an effect in the middle of both sides.
- Adjust the stop (4) against falling the belt out of the pulley.
- Assemble the bottom cover belt (7) on to the motor.
- Assemble upper cover belt (6) and hand wheel (1).

www.promelectroavtomat.ru

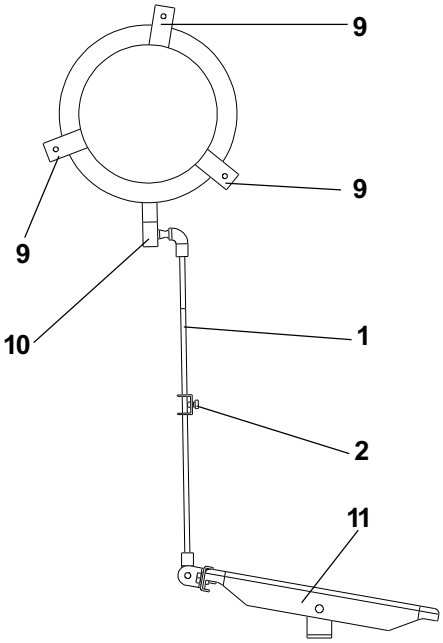

4.6 Assembly of treadle rod, knee lever, thread stand and lighting

- Insert treadle rod (1) on pins.
- Adjust approx. length of rod by means of screw (2).If the ends of rod are too long, shorten them.
- Loosen the screws (9) and turn the motor with lever in such a way that the lever (10) would be in direction of the rod axis (1).
- Adjust angular turning of treadle (11). The position of treadle is correctly adjusted if there is a square angle at the shinbone of the operator to the treadle.

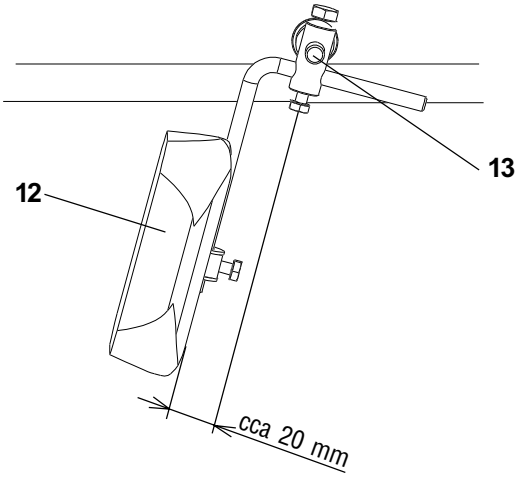

- Fasten knee lever (12) onto the shaft (13) and adjust it in a position that it is shown in the picture (slightly leant out).

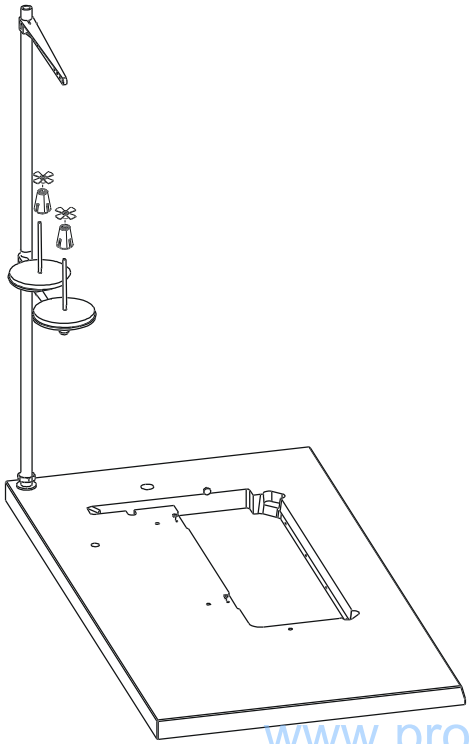

- Assemble the thread stand so that its arms would be parallel to the longer edge of a table top.

www.promelectroavtomat.ru

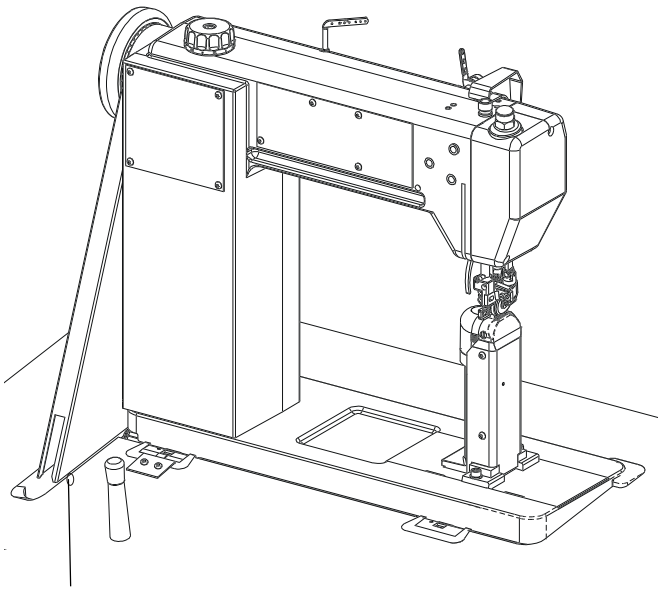

- Install lighting, if available, and pull its cable through the hole (6) and connect it to the cable of transformer.

5. Examination of sewing

Caution! Risk of injury!
Before threading a thread switch the main switch off and wait until the motor stops.

- Check the sense of turning the hand wheel – according to the arrow situated on it.
- Thread a thread.
- Choose sewing material.
- First sew slowly then speed up the sewing.
- If the stitch does not meet requirements, follow the first part of instructions manual or service book.

www.promelectroavtomat.ru

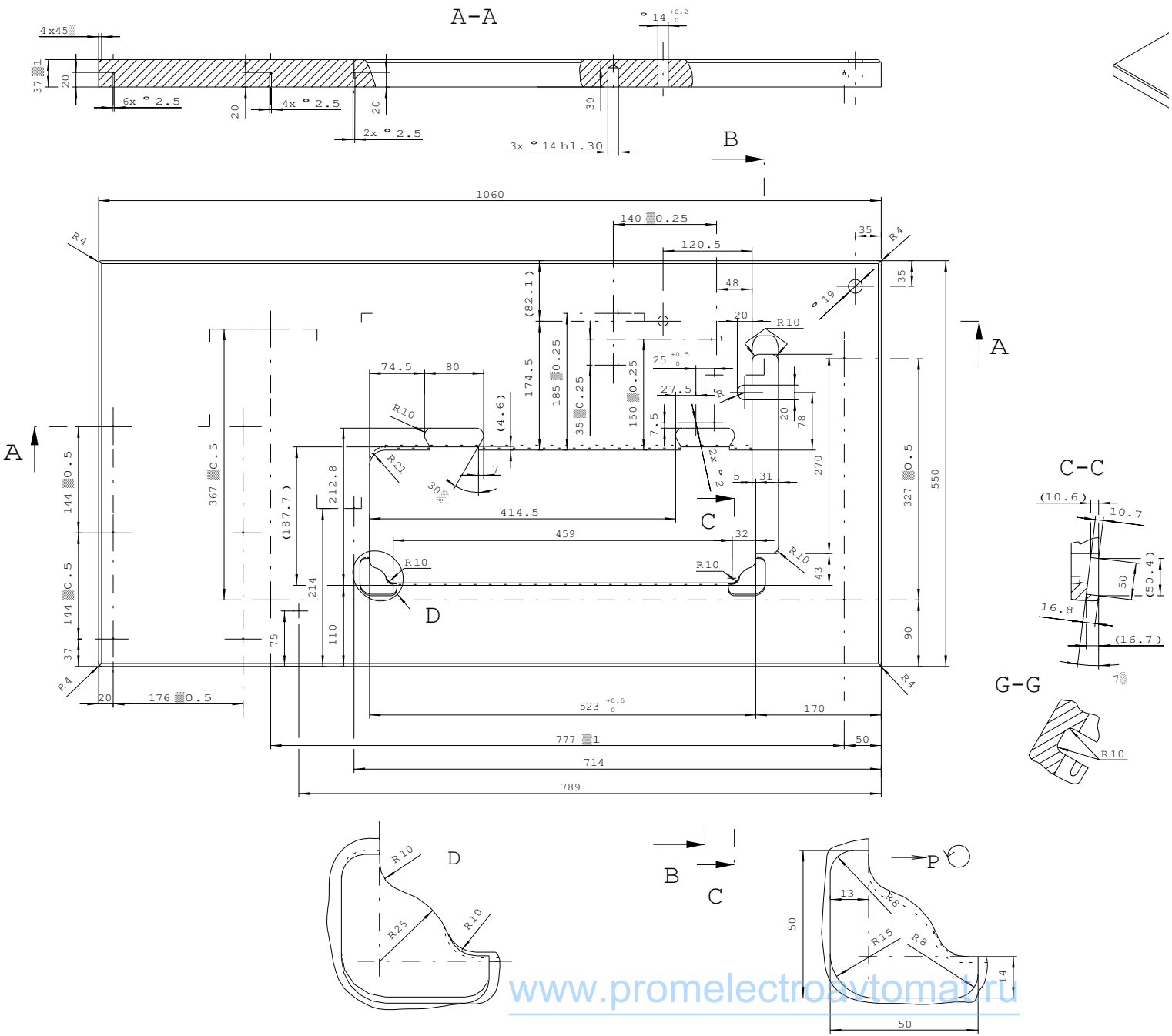

www.promelectroavtomat.ru