INSTRUCTION BOOK

RIBBING ATTACHMENT

SRP–50

www.PromElectroAvtomat.ru

SINGER

www.PromElectroAvtomat.ru

CONTENTS

page

STANDARD ACCESSORIES 1
SET UP MACHINE 2
RIBBER NEEDLE BED 7
RIBBER CARRIAGE 9
RIBBER ARM 10
P CARRIAGE 11
OPERATION TABLE 12
YARN AND STITCH DIALS 14
CAST ON AND KNITTING 15
REMOVE FABRIC FROM MACHINE 22
CAST ON FOR TIGHTER EDGE 23
VARIOUS RIB STITCHES 24
- DOUBLE RIB 25
- K1. P1. RIB 25
- K2. P2. RIB 26
- WIDE RIB 27
- ENGLISH RIB 28
- SWUNG ENGLISH RIB 28
- VARIATION OF ENGLISH RIB 29
- DOUBLE ENGLISH RIB 29
- HERRINGBONE SWING 30
- VARIATION SWING 31
- TUBULAR KNITTING 33
- PIN TUCK 33
- PUNCH PIN TUCK 34
- PUNCH TUCK RIB 35
- TUCK RIB STITCH 36
- DRIVE LACE 37
- PILE RIB 40

TAKING A TENSION GAUGE 44
KNITTING TECHNIQUES 46
- Increase 46
- Decrease 47
- Partial knitting 48
- Waste knitting 52
- Buttonhole 53

WHAT TO DO IF...
- If Carriage has jammed 54
- If a needle has been damaged 55
- If you knit with Knitter only as Ribber is connected 55
- If you have made a mistake in knitting 56
- If a stitch has dropped 57
- If P Carriage jams 57
- If Ribber Arm does not fit on Carriage properly 58
- If stitches float 58

MAINTENANCE 59
REPACK RIBBER 60

www.PromElectroAvtomat.ru

Congratulations on your purchase of SRP-50 Ribber !!

This technologically advanced and sophisticated Ribber converts your knitter into a double bed knitting machine, and will be sure to enhance your pleasure in knitting.

With easy-to-follow instructions and diagrams, this book assists you to familialize yourself with the SRP-50 Ribber before making your first garment using the Ribber.

www.PromElectroAvtomat.ru

STANDARD ACCESSORIES

Following accessories are packed.
Please be careful, when unpacking accessories, not to lose Close Knit Bar (No. 11).

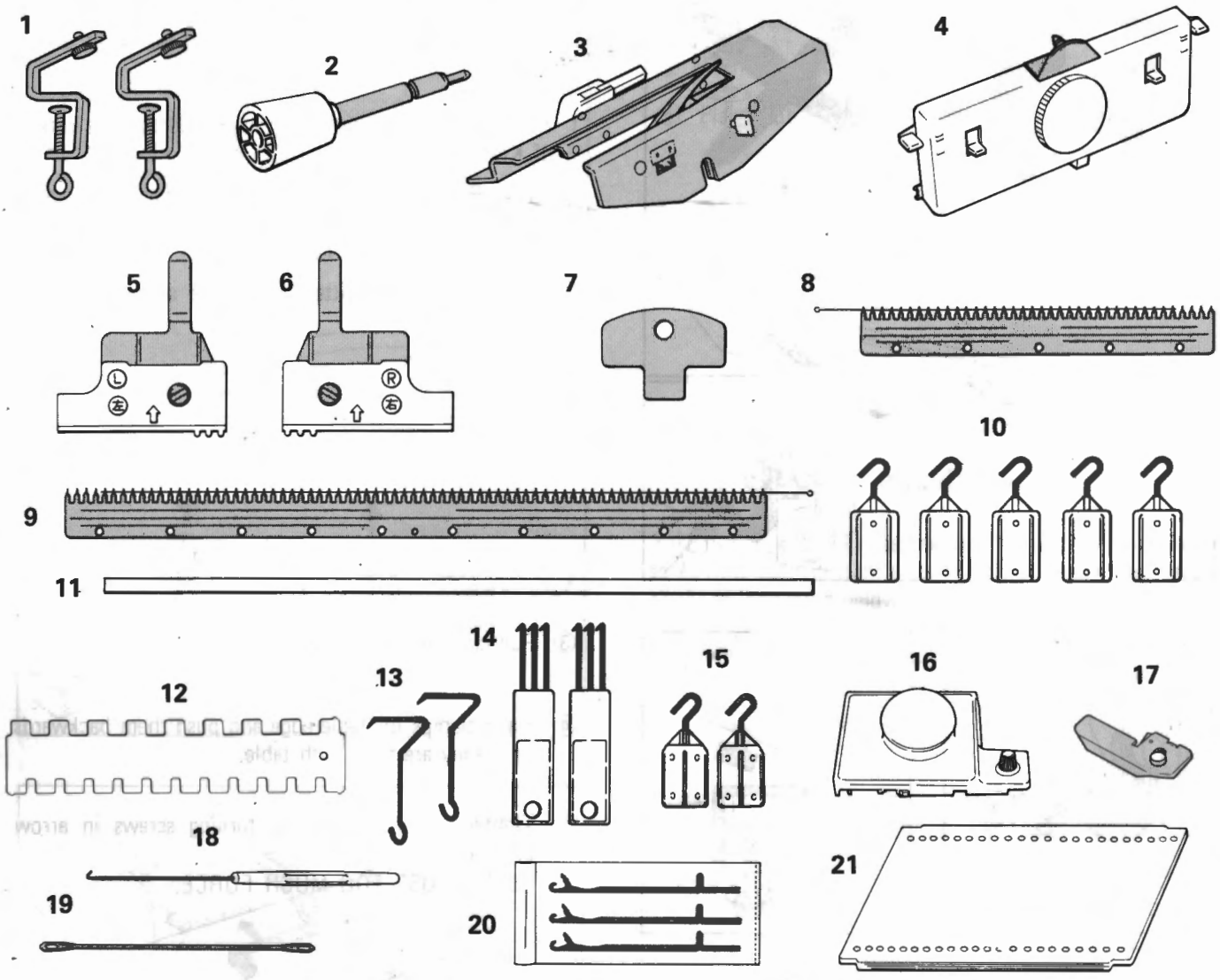

1 Ribber Clamp – 07105448
2 Swing Handle – 01694009
3 Ribber Arm – 06503718
4 Ribber Carriage – 04103719
5 Auxiliary Piece (L) – 01623719
6 Auxiliary Piece (R) – 01613710
7 Screw Driver – 07144009
8 Cast-on Comb (short) – 07026008
Cast-on Wire (short) – 07807001
9 Cast-on Comb (long) – 07016009
Cast-on Wire (long) – 07797004
10 Ribber Weight (large) – 07074008
11 Close Knit Bar – 17194317
12 Needle Pusher (2/1, 2/2) – 07303993
13 Side Hanger – 07095441
14 Hanger Comb – 07284003
15 Edge Weight – 07094006
16 P Carriage – 04293718
17 P Presser – 07474000
18 Hook Tool – 07123714
19 Double-eye Transfer Tool – 07176001
20 Spare Needle Envelope (incl. 3 needles) – 08019192
21 Punch Card Set (No.1 (R–2) ~ No.10 (R–2)) – 07503717

Note: When ordering above parts please quote part numbers.

www.PromElectroAvtomat.ru

SET UP MACHINE

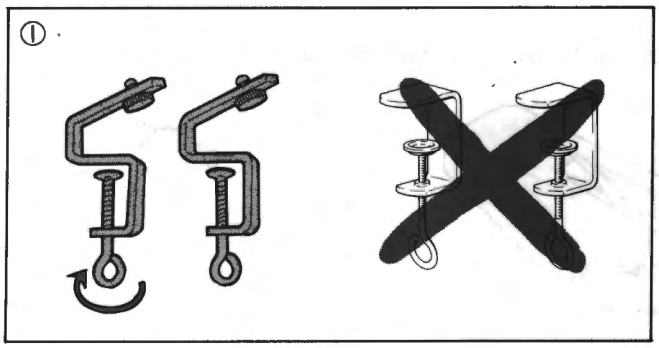

Set up Knitter

Set up Knitter referring to its instruction book, but the following differences must be observed so as to attach Ribber.

1. Fasten the Knitter to table, using Ribber Clamps instead of Knitter Clamps.

① Take Ribber Clamps and turn screws in arrow direction as far down as they go.
DO NOT USE KNITTER CLAMPS.

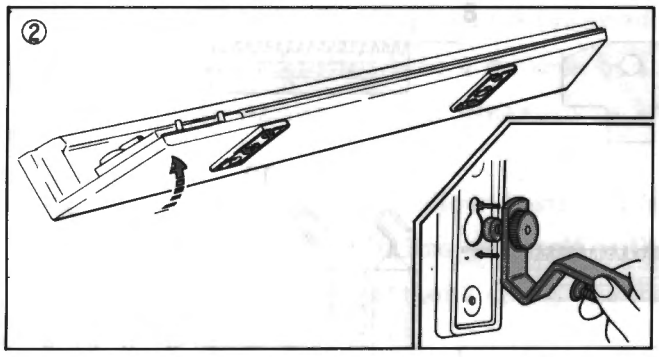

② Raise front of Knitter and insert screw head into keyhole slot.

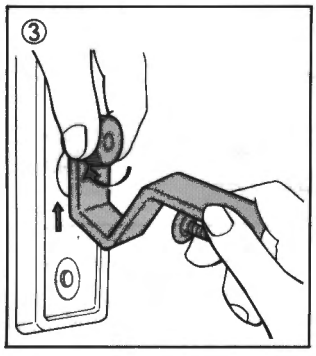

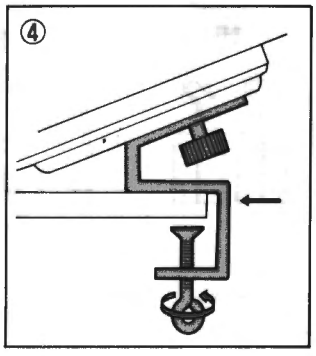

③ Pull clamps upwards and fasten screws.

④ Place clamps on table edge and push them backwards until they are flush with table.

Tighten clamps firmly by turning screws in arrow direction.
DO NOT USE TOO MUCH FORCE.

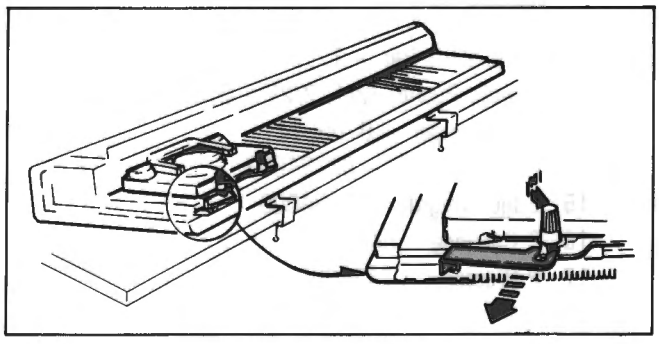

2. Remove Carriage Fastener.

DO NOT ATTACH KNITTER ARM TO CARRIAGE.
LACE CARRIAGE CAN NOT BE USED WITH RIBBER.

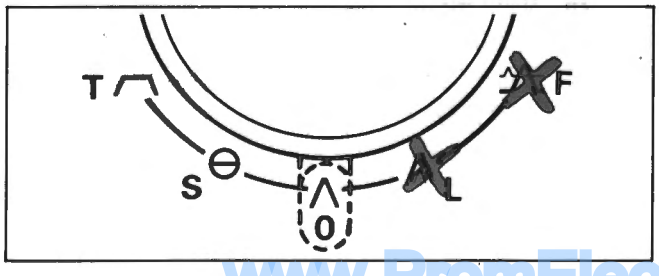

3. Set Cam Lever to STOCKINET (∧, 0).

IMPORTANT:
Cam Lever should never be set to PUNCH LACE (⋀, L) or KNIT-IN (⋏, F) when using Ribber.

www.PromElectroAvtomat.ru

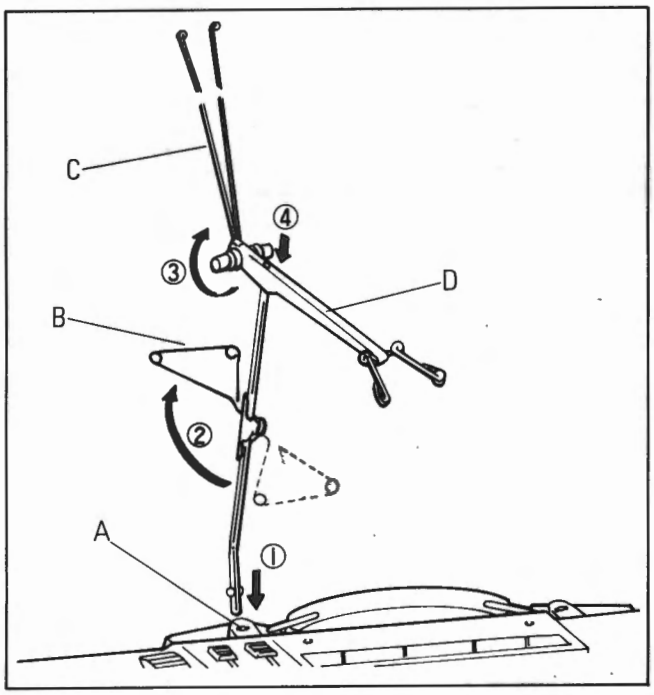

4. Assemble Auto-Tension and Yarn Rod as follows.

① Insert the bent and short end of Yarn Rod into the bracket socket "A" so as the Rod inclines towards you.

② Turn Tension Guide "B" to the back.

③ Turn Tension Springs "C" upwards.

④ Place Auto-Tension "D" securely onto Yarn Rod.

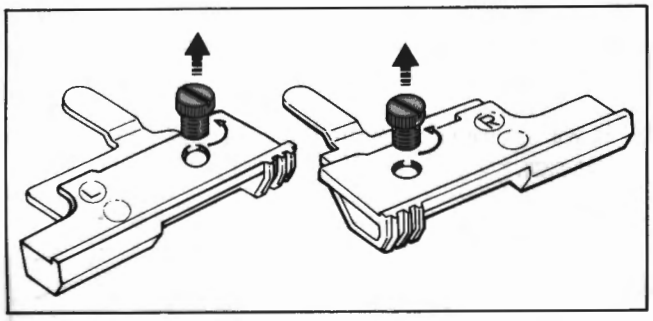

Attach Ribber Needle Bed to Knitter.

Take out Auxiliary Pieces, marked "L" and "R", and insert them into left and right ends of Knitter Needle Bed respectively as instructed below.

1. Remove Ribber Joiner Screws.

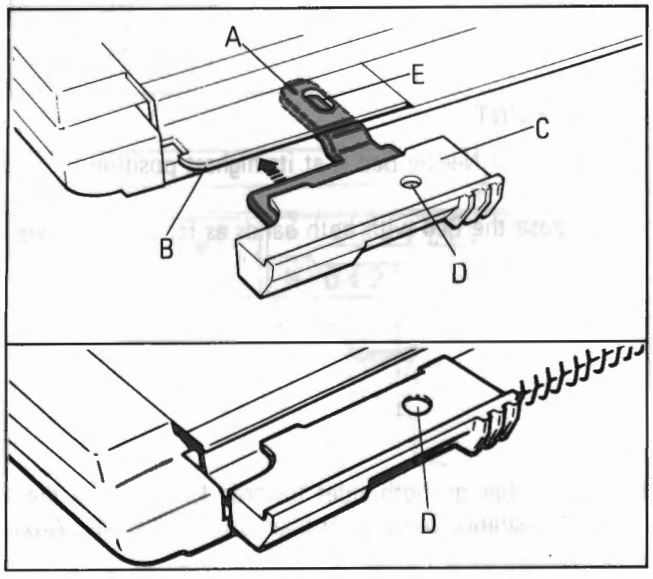

2. Insert finger "A" of Auxiliary Piece into underneath the front edge "B" of Knitter Bed and push backward until plastic part "C" of Auxiliary Piece covers front edge of Bed.

   Ensure hole "D" of Auxiliary Piece corresponding with slot "E" on Bed.

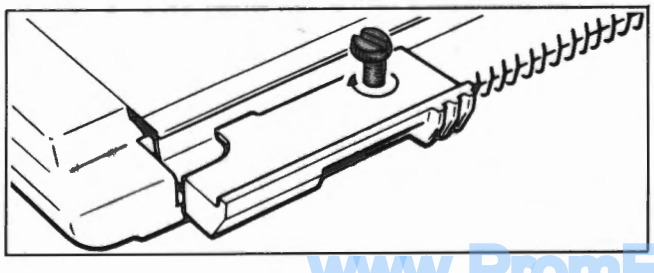

3. Insert Ribber Joiner Screws on left and right side into Auxiliary Pieces and fasten by 3–4 turns only.

www.PromElectroAvtomat.ru

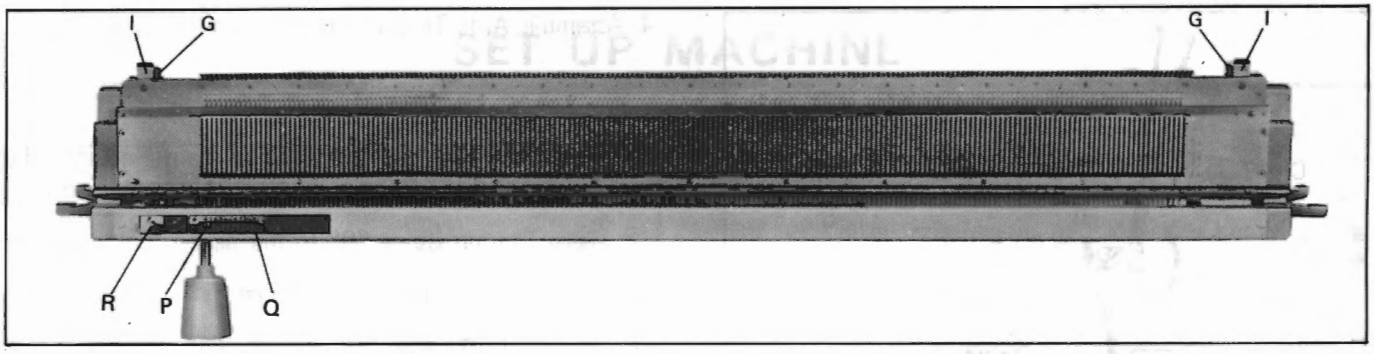

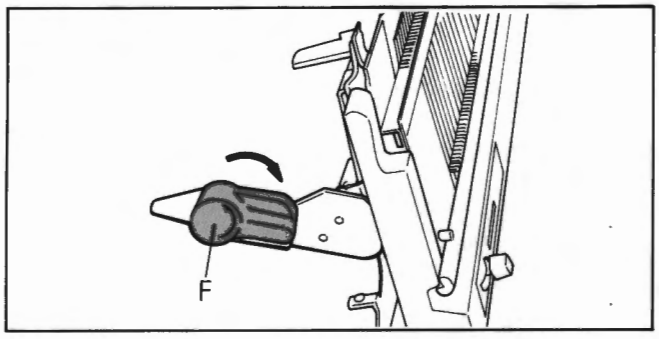

4. Bring down both Push-up Cams "F" forward.

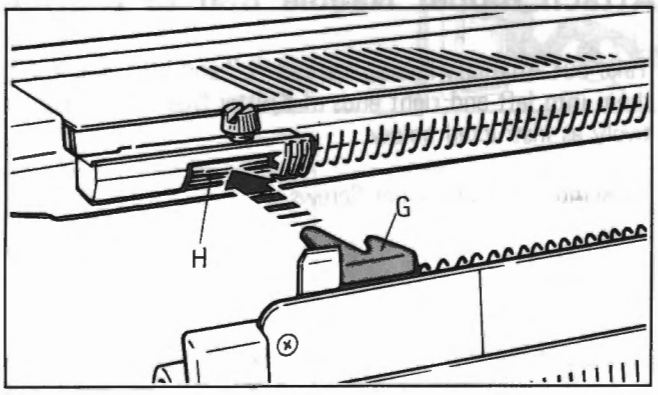

5. Hold Ribber with both hands and insert Ribber Joiners "G" on both sides into slots of Auxiliary Pieces "H".

   It will be easier to insert the right side first, then the left side.

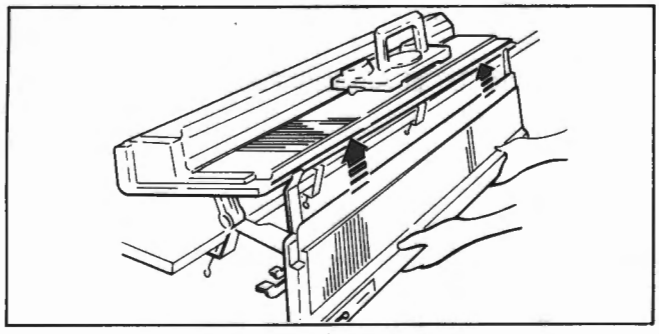

CHECK POINT

Ensure Ribber Needle Bed is at its highest position.

If not, push the Bed with both hands as far up as it goes.

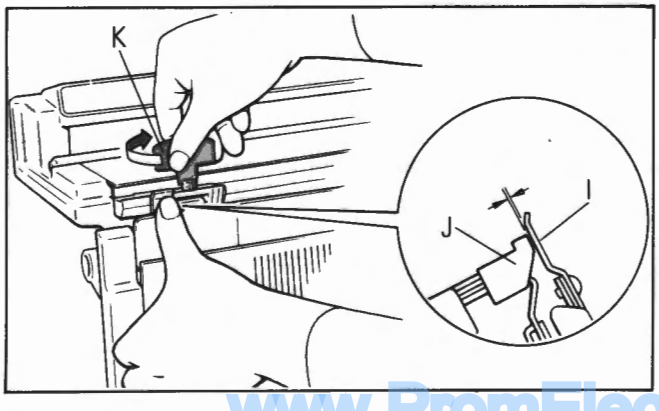

6. Push Ribber on both sides towards Knitter until there is no clearance between Ribber Stopper "I" and Auxiliary Piece "J".

   Fasten both screws with Screw Driver "K".

www.PromElectroAvtomat.ru

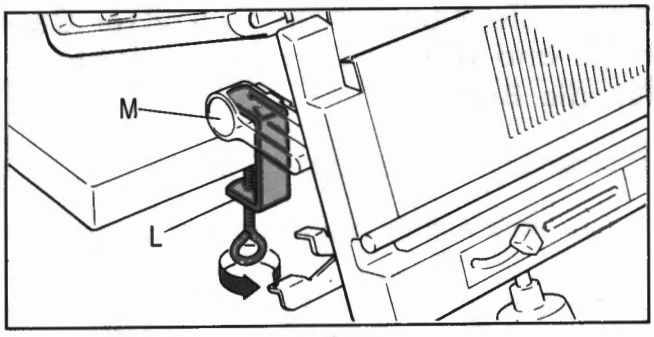

7. With Knitter Clamps "L", secure foot of Push-up Cams "M" on table.

   DO NOT USE TOO MUCH FORCE.

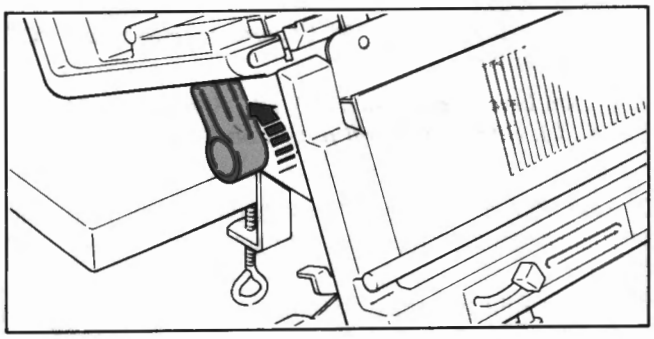

8. Raise both Push-up Cams in arrow direction.

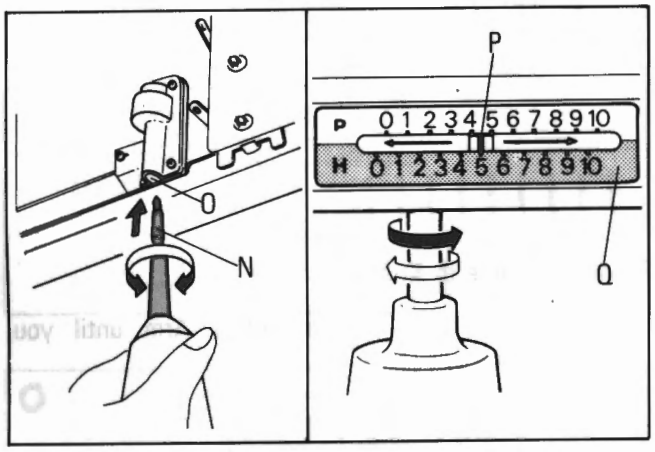

9. On back of left side of Ribber, insert Swing Handle shaft "N" from underneath into Swing Bearing "O".

   Push Handle in a twisting manner until you hear a click with a slight jerk.

   Ensure that Pointer "P" on Swing Indicator "Q" moves when turning Handle to the left and the right.

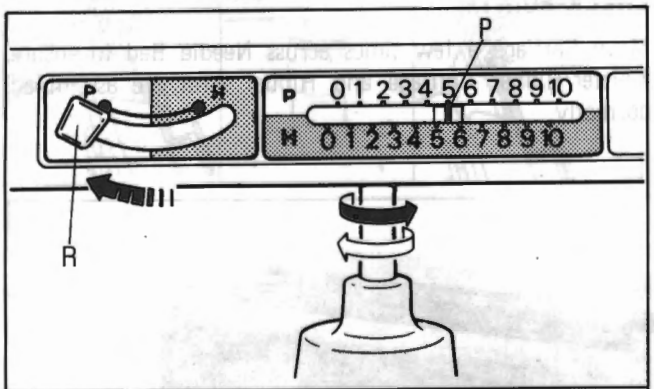

10. Set Half-Pitch Lever "R" to P (left side).

    By turning Handle, set Indicator Pointer "P" at 5 on upper scale P.

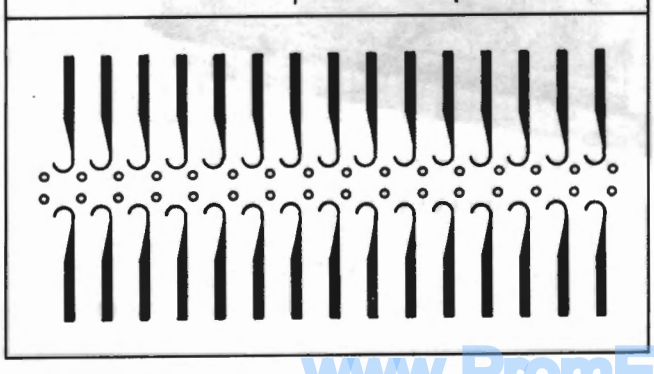

CHECK POINT

When joining Ribber to Knitter has been finished, check the positioning of Ribber against Knitter by pushing up several needles on both beds up. The needles on both beds must confront with each other as shown.

If not, loosen Ribber Joiner Screws and Clamps securing Push-up Cams, then pat lightly either end of Ribber. Then fasten them again.

The needles pushed up must be back to original position.

www.PromElectroAvtomat.ru

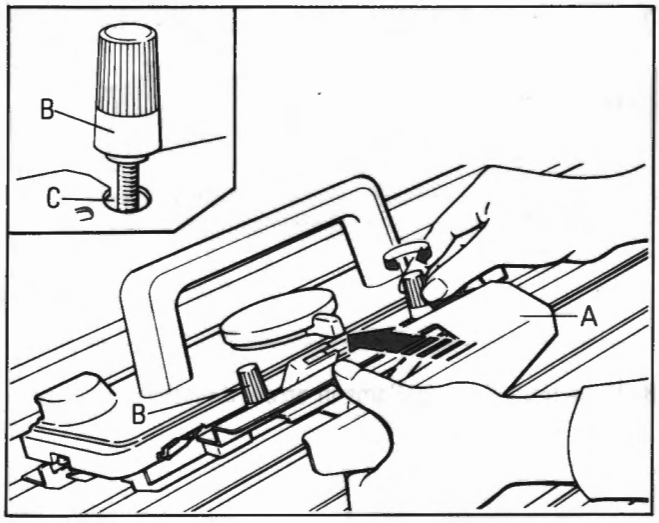

Assemble Ribber Arm to Knitter Carriage and Ribber Carriage to Ribber Needle Bed.

1. Loosen both Arm Nuts of Knitter Carriage.

   Take Ribber Arm "A" and slide it under two Arm Nuts "B".

   Push Ribber Arm as far back as it goes and tighten Arm Nuts firmly by turning them in arrow direction.

   IMPORTANT
   Ensure that Arm Nuts "B" fit correctly into cutout "C" of Ribber Arm.

   If Cam Lever is set at KNIT-IN (⋏, F) or PUNCH LACE (⋏, L), Ribber Arm will not fit on Knitter Carriage.

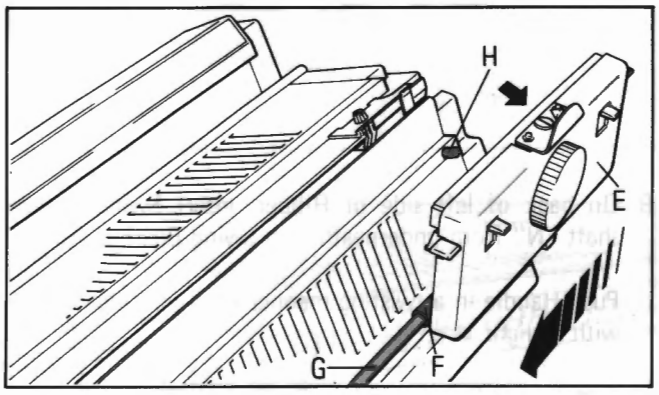

2. Take Ribber Carriage "E", and slide pipe "F" onto the Ribber Rail "G" from the right side.

   Tilt the Ribber Carriage towards you to clear the Stopper Pin "H".

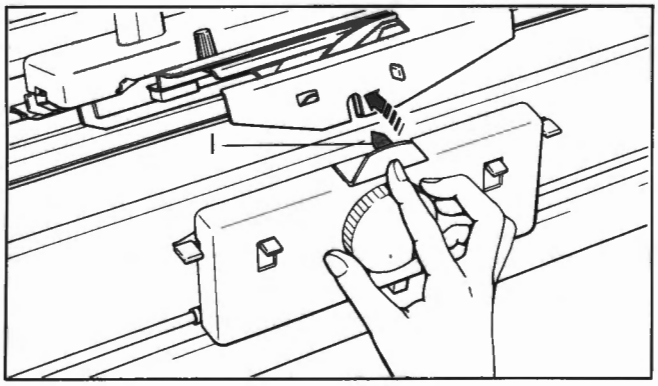

3. Move Carriage to Knitter Carriage.

   Push in Link Pin "I" into the slot of Arm until you hear a click.

CHECK POINT

Move Carriage a few times across Needle Bed to ensure Knitter/Ribber Carriage and Ribber Arm are assembled correctly.

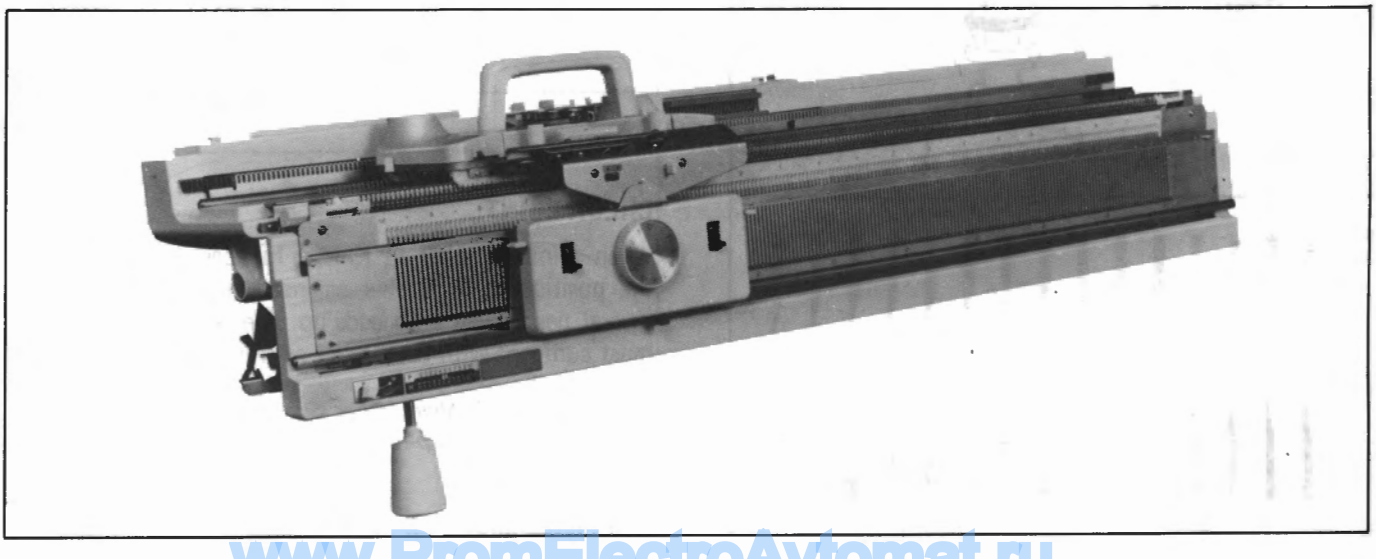

www.PromElectroAvtomat.ru

RIBBER NEEDLE BED

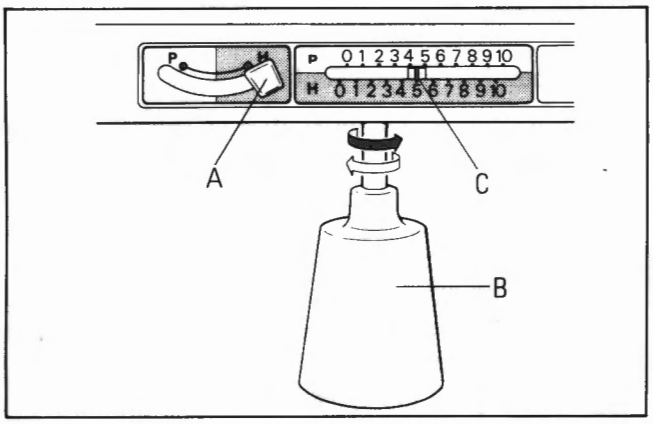

Half-Pitch Lever and Swing Indicator

There are two setting positions (P or H) for Half-Pitch Lever "A" for Ribber needle against Knitter needle.

Position of Ribber needle against Knitter is subject to the setting of Half-Pitch Lever.

Swing Handle

By rotating Swing Handle "B" either way the Ribber Needle Bed can be moved either the right or left.

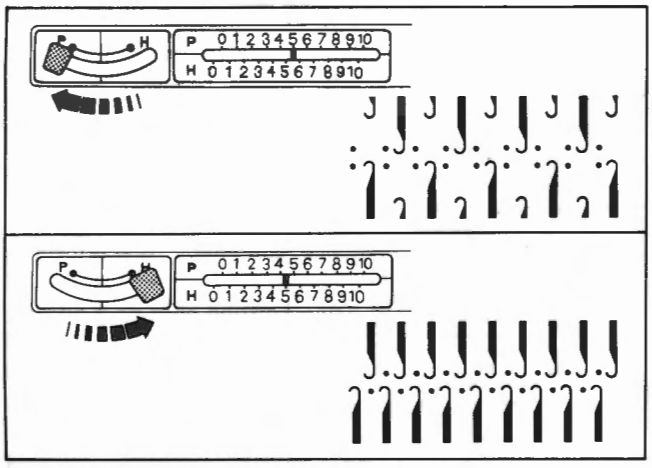

Swing Indicator "C" shows the position of Ribber needle on P scale (upper) or on H scale (lower).

P position

Half-Pitch Lever is set to P when every other needle selection is used.
Read the number on P scale (upper) of Swing Indicator.

H position

Half-Pitch Lever is set to H when every needle selection is used.
Read the number on H scale (lower) of Swing Indicator.

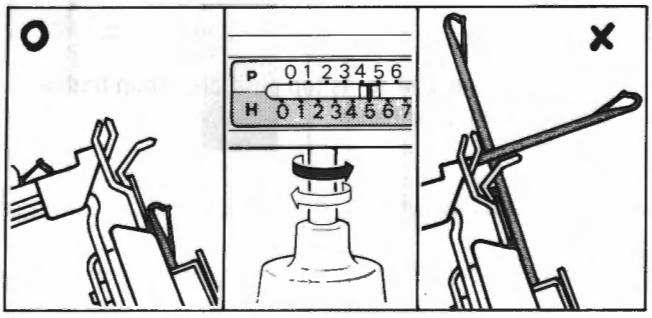

IMPORTANT:

Do not turn Swing Handle when needles on Ribber are crossed with those of Knitter.

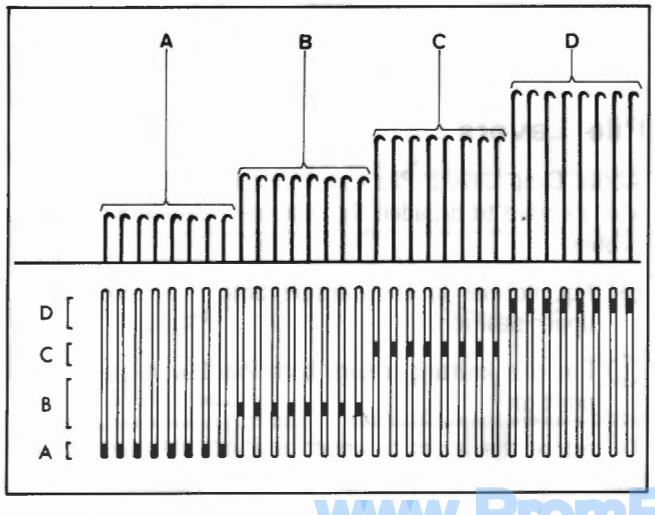

Needle Positions

On both left and right sides of Needle Bed, you will see markings A, B, C and D associated with brackets "]".

These four needle positions are selected during knitting.

A – Non-working position
B – Working position
C – Needles in this position always operate.
D – Holding position
(Needles in this position are knitted back to B position when Russel Levers are at = position.)

www.PromElectroAvtomat.ru

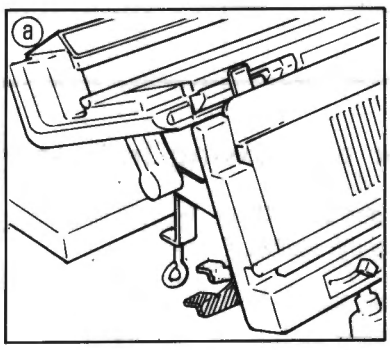

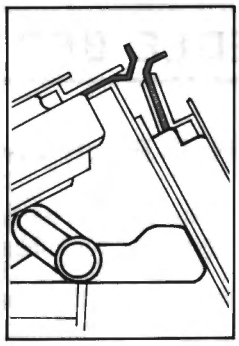

Drop Levers

On both left and right sides of Needle Bed you will find Drop Levers (marked red). Using these levers you can change position of Needle Bed.

ⓐ Top position (knitting position)

This position is used for knitting rib stitches.

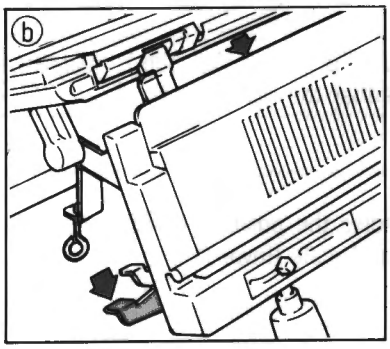

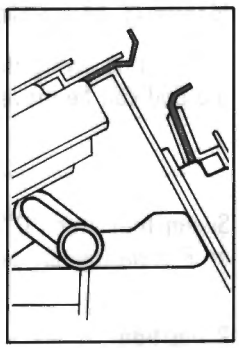

ⓑ Middle position

Depress Drop Levers on both sides once, and Ribber Bed is lowered to its middle position.
This position is used when picking up stitches.

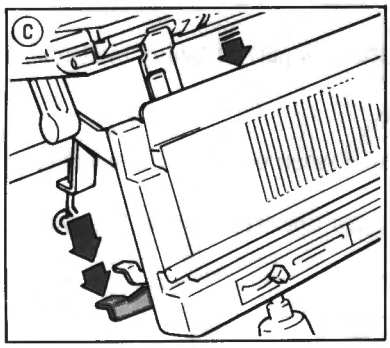

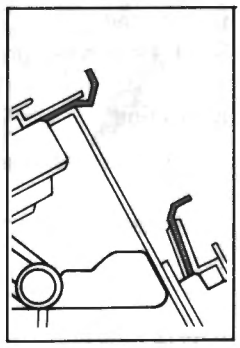

ⓒ Lowest position

Depress Drop Levers twice, and Ribber Bed is lowered to its lowest position.
This position is used when knitting only on Knitter.

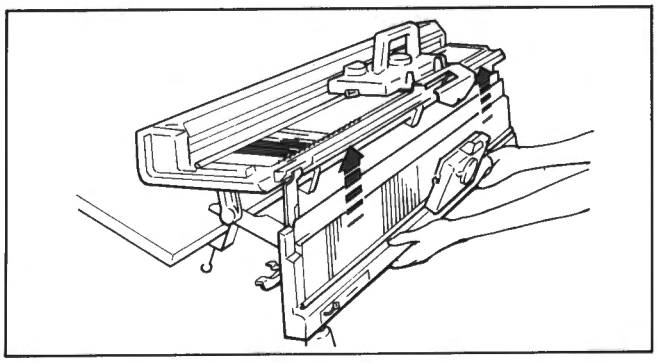

To restore Ribber Bed to its top position, lift up both ends of the Bed with your hands.

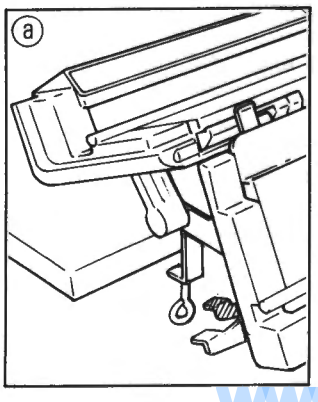

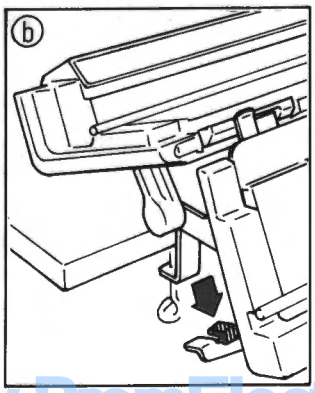

Pile Levers

Above Drop Levers, Pile Levers (marked blue) are located, and are used to broaden the distance between Knitter and Ribber.

ⓐ For normal knitting ensure both Pile Levers are in upper position.

ⓑ For pile knitting ensure both Pile Levers are in lower position.

To restore the levers to upper position, lift them up with your hands.

www.PromElectroAvtomat.ru

RIBBER CARRIAGE

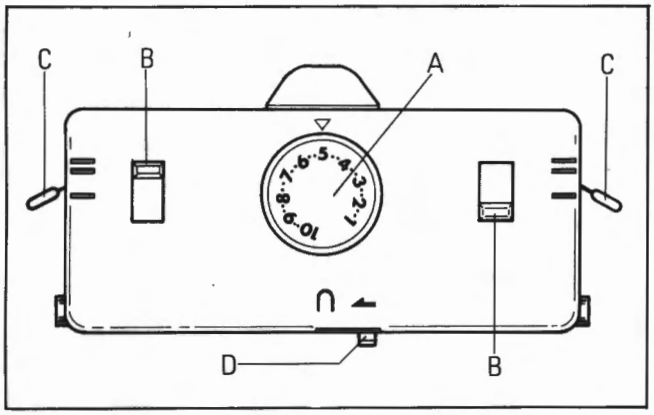

A – Stitch Dial
B – Set Levers
C – Russel Levers
D – Pick Knob

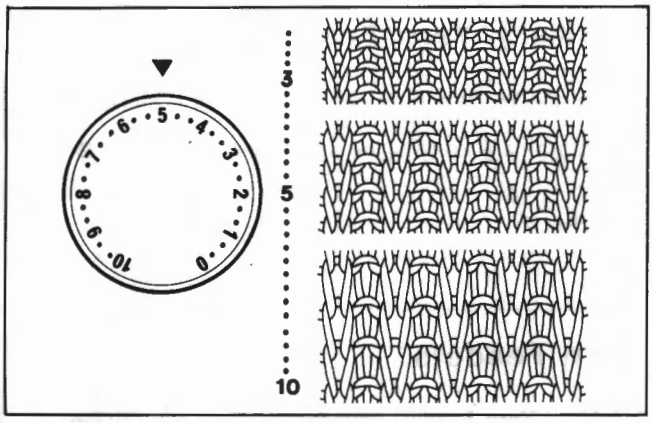

Stitch Dial

Controls stitch size.
Set a selected number or dot to ▼ mark.
The larger the number the larger the stitch, and the smaller the number the smaller the stitch.

According to the thickness of yarn to be used, select proper setting of Stitch Dial. (Refer to page 14.)

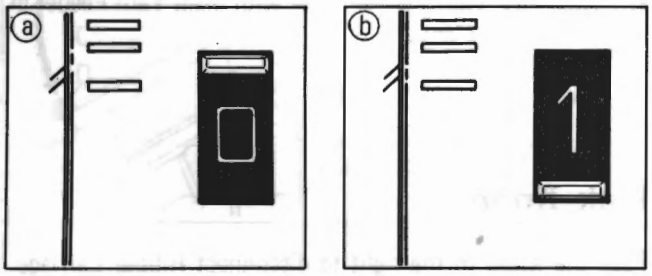

Set Levers

Control needles in "B" position.

ⓐ NON KNITTING POSITION, needles in B position will not knit.

ⓑ KNITTING POSITION, needles in B position will knit.

Left lever works when moving Carriage to the left.
Right lever works when moving Carriage to the right.

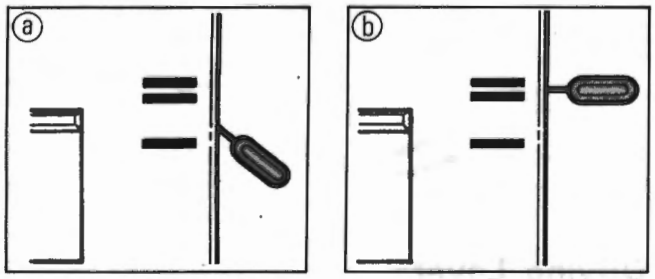

Russel Levers

Control needles in "D" position.

ⓐ NON KNITTING POSITION, needles remain in D position.

ⓑ KNITTING POSITION, needles in D position will knit back to B position.

Left lever works when moving Carriage to the left.
Right lever works when moving Carriage to the right.

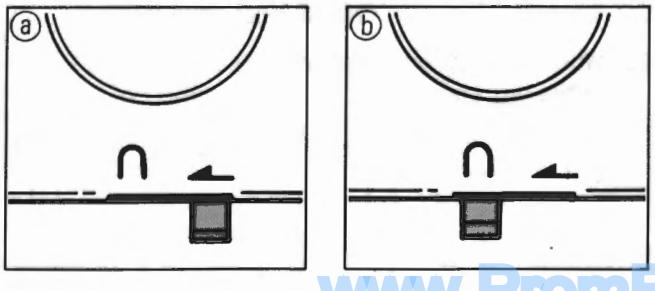

Pick Knob

Works on the needles in B position when Set Lever on the leading side is set at 0 .

ⓐ NON KNITTING POSITION, yarn is not knitted.

ⓑ PICK POSITION, yarn is laid into needle hook only.

www.PromElectroAvtomat.ru

RIBBER ARM

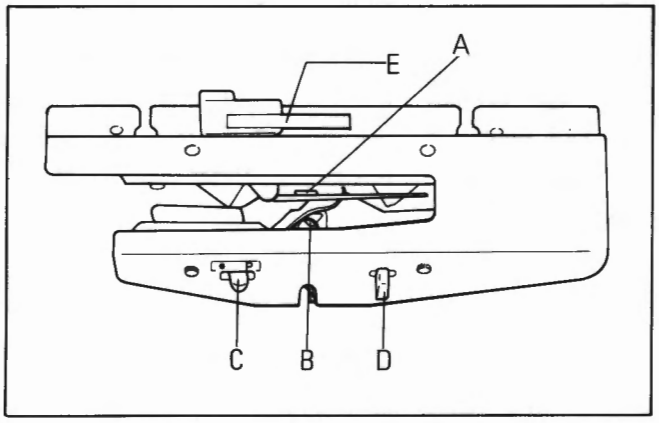

A – Main Yarn Feeder
B – Auxiliary Yarn Feeder
C – Auxiliary Yarn Feeder Lever
D – Link Knob
E – Driving Lever

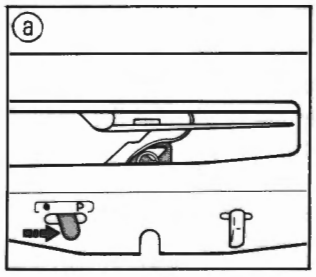

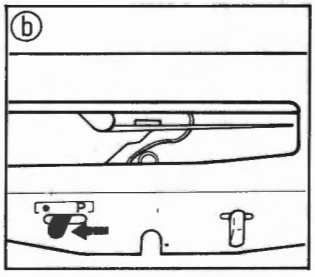

Auxiliary Yarn Feeder Lever

ⓐ In pile knitting only, set this lever to P mark.

ⓑ In ordinary knitting, be sure to set this lever to ● mark.

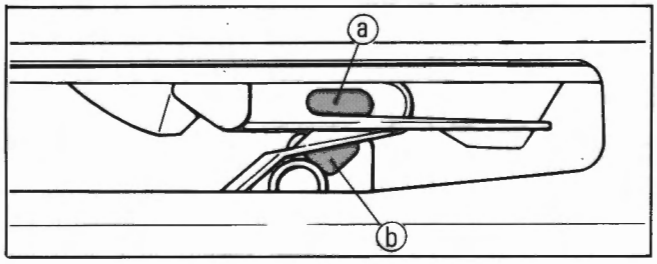

Yarn Feeders

ⓐ Main Yarn Feeder, used for ordinary rib stitches.

ⓑ Auxiliary Yarn Feeder, used with Main Yarn Feeder in pile knitting only.

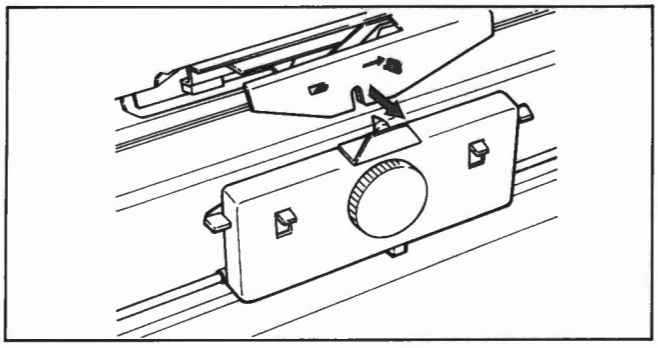

Link Knob

Push the Knob to the right to disconnect Ribber Carriage.

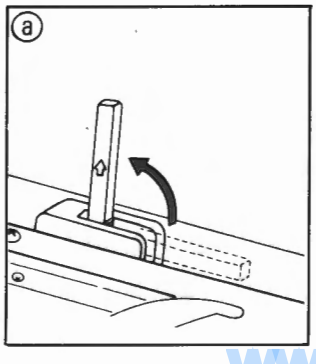

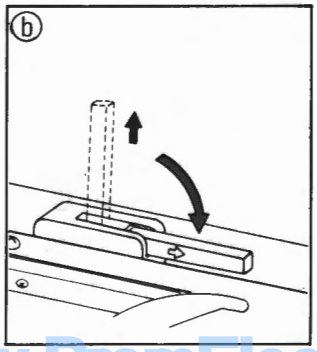

Driving Lever

ⓐ When knitting with Yarn Changer, raise this lever.

ⓑ When knitting without Yarn Changer, keep this lever in the rest position.

To lay down, slightly pull it upwards with your fingers and then lay it down.

www.PromElectroAvtomat.ru

P CARRIAGE

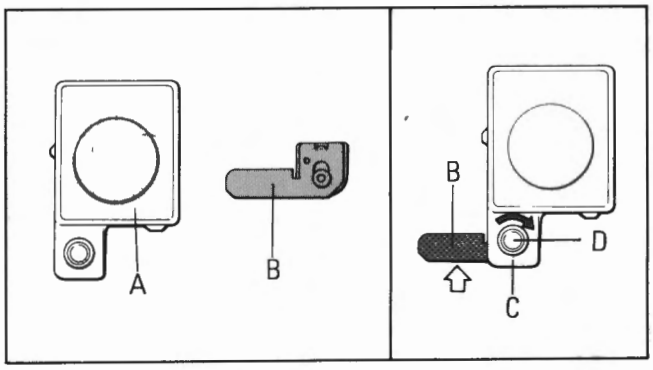

In drive lace knitting, use P Carriage "A" without P Presser "B".

In pile knitting, use P Carriage "A" with P Presser "B" attached.

Place P Presser "B" underneath Arm "C" and secure with fastening screw "D".

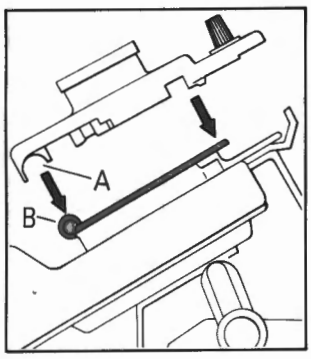

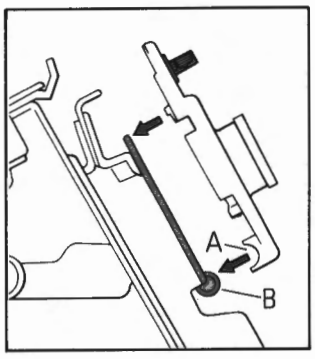

WITHOUT P PRESSER

Place P Carriage straight onto Knitter or Ribber Needle Bed ensuring rail guide "A" fits correctly on rail "B".

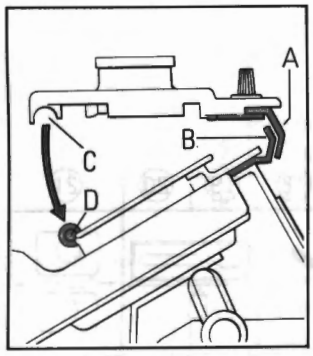

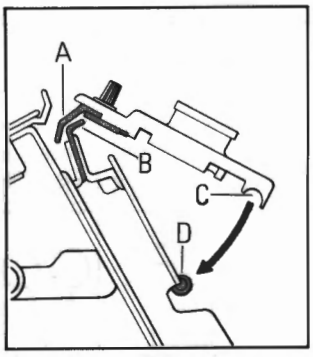

WITH P PRESSER ATTACHED

Place P Presser "A" first over Sinker Posts "B" thereafter place rail guide "C" onto rail "D".

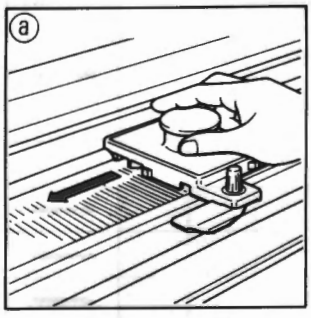

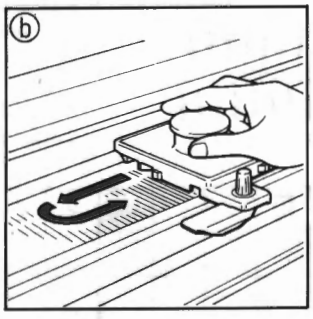

On Knitter always start from the right side.

ⓐ Move P Carriage once (right→left).
Stitches will be behind latches and needles are aligned in C position.

ⓑ Move P Carriage twice (right→left→right).
Stitches have slipped off needles.

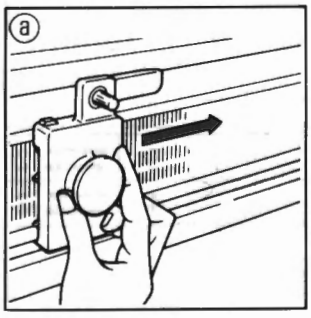

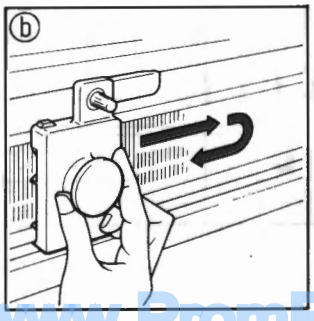

On Ribber always start from the left side.

ⓐ Move P Carriage once (left→right).
Stitches will be behind latches and needles are aligned in C position.

ⓑ Move P Carriage twice (left→right→left).
Stitches have slipped off needles.

www.PromElectroAvtomat.ru

OPERATION TABLE

For cast on and main knitting, Operation Table as shown below is given to instruct settings and operation of machine.

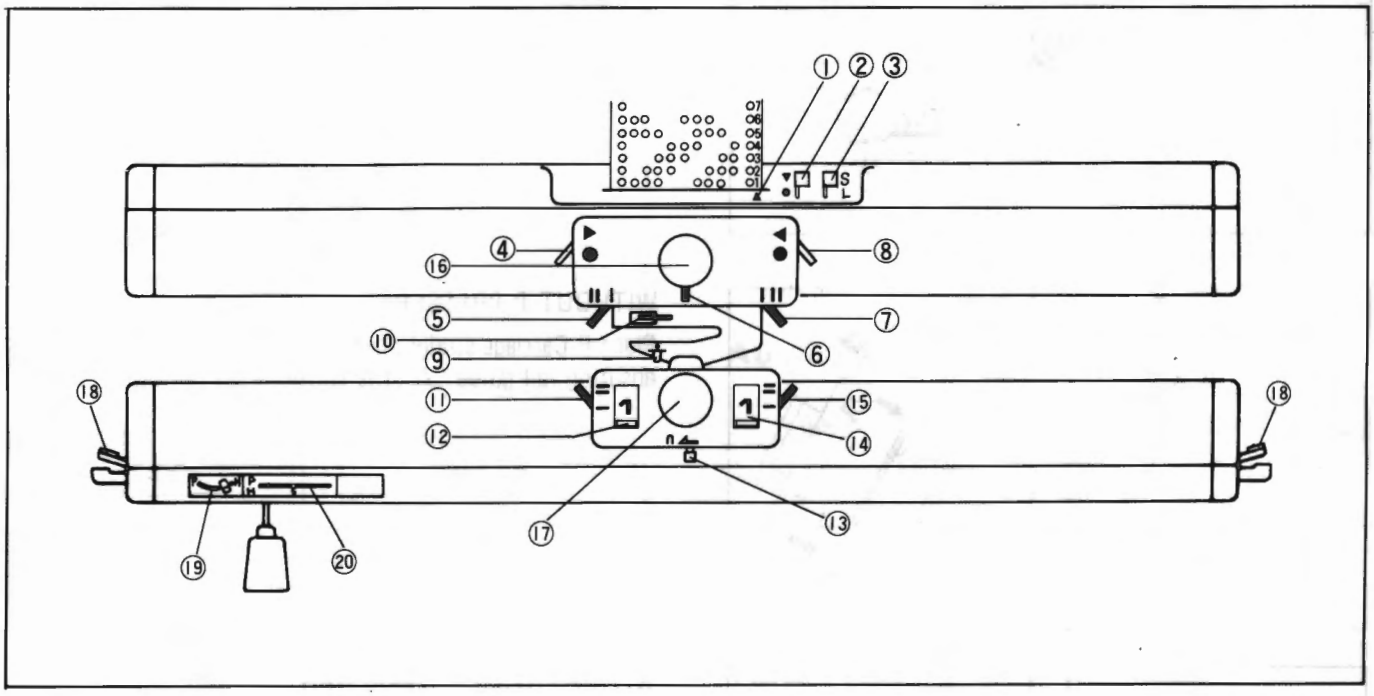

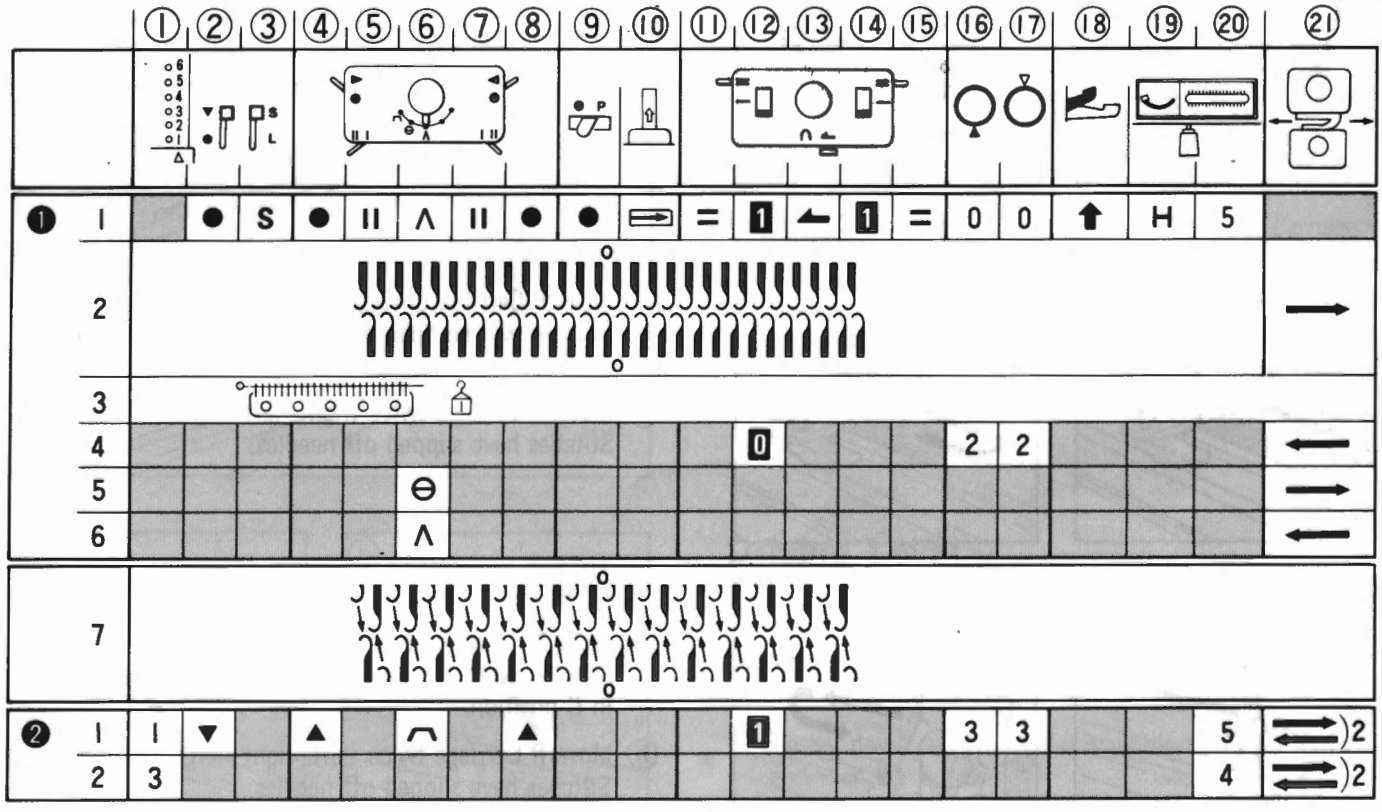

www.PromElectroAvtomat.ru

CAST-ON	❶	1	Set machine controls for the initial row.
		2	Arrange needles, and knit the initial row.
		3	Suspend Cast-on Comb with Weights.
		4–6	Change machine controls for knitting subsequent 3 rows.
CHANGES FOR MAIN KNITTING		7	Rearrange needles for main knitting by transferring stitches. (Not neccessary if needle arrangement for main knitting is the same for cast on.)
MAIN KNITTING	❷		Re-set machine controls for working main knitting. Follow the sequence 1, 2.....and repeat the same.

PATTERN PANEL	①	Punch Card	⇩ – set Punch Card only when instructed. Number indicates Card Memory number.
	②	Stop Knob	
	③	L Knob	always be set at S in rib knitting.
KNITTER CARRIAGE	④	Side Lever (left)	
	⑤	Russel Lever (left)	*
	⑥	Cam Lever	∧ – STOCKINET (O) ⊖ – SLIP (S) ⌒ – TUCK (T) never set to KNIT-IN (⌒ F) and PUNCH LACE (∧, L) in rib knitting.
	⑦	Russel Lever (right)	*
	⑧	Side Lever (right)	
RIBBER ARM	⑨	Auxiliary Yarn Feeder Lever	
	⑩	Driving Lever	▭ – resting position ▯ – working position
RIBBER CARRIAGE	⑪	Russel Lever (left)	*
	⑫	Set Lever (left)	
	⑬	Pick Knob	
	⑭	Set Lever (right)	
	⑮	Russel Lever (right)	*
STITCH DIALS	⑯	Knitter Stitch Dial	Refer to table on next page.
	⑰	Ribber Stitch Dial	
RIBBER NEEDLE BED	⑱	Pile Levers (left & right)	⬆ – upper position ⬇ – lower position
	⑲	Half-Pitch Lever	
	⑳	Swing Indicator	
	㉑	Arrow mark indicates knitting direction of Carriage and number shows the number of rows required to be knitted.	

* Always set Russel Levers at II except for working partial knitting.

www.PromElectroAvtomat.ru

YARN AND STITCH DIALS

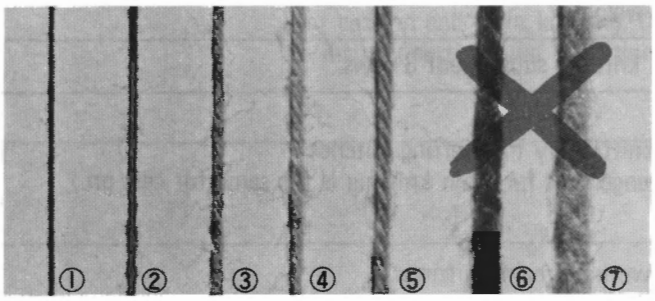

Stitch Dial numbers will vary according to thickness of yarn and type of knitting.

For your reference, recommended numbers are instructed below.

Photograph shows actual size of yarns.
Very thick yarns (⑥, ⑦) are not suitable for rib knitting.

TYPE OF YARN		thin ①	thin ②	light ③		medium ④		thick ⑤	
TENSION DIAL		7		5 – 7		3 – 5		1 – 3	
STITCH DIAL									
CAST ON (every needle selection)	initial row	0	0	0	0	0	0	–	–
	subsequent rows	0	0	1	1	2	2	–	–
CAST ON (every other needle selection)	initial row	–	–	0	0	0	0	0	0
	subsequent rows	–	–	0	0	0	0	2	2
DOUBLE RIB		0 – 1		1 – 2		3 – 4		–	
K1. P1. RIB		–		0 – 1		2 – 3		6 – 7	
K2. P2. RIB		–		2 – 3		3 – 4		6 – 7	
WIDE RIB		–		1–2	3–4	3–4	5–6	5–6	7–8
*TUBLAR KNITTING		2–3	4–5	4–5	6–7	5–6	7–8	–	

It is recommended to set the ribber Stitch Dial to two full tensions looser than that of the main machine.

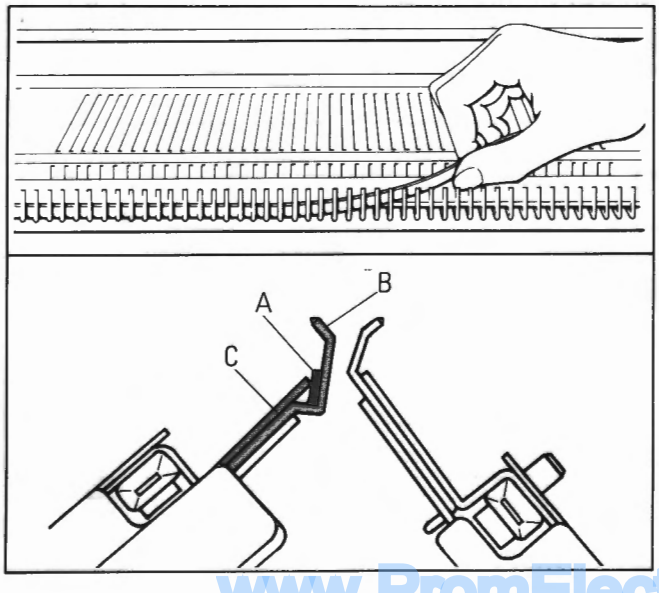

IMPORTANT:

When knitting with thin or light yarns or in tuck ribs with Punch Card, use Close Knit Bar.

Before arranging needles, place Close Knit Bar "A" between Sinker Posts "B" and front edge "C" of Knitter Needle Bed.

www.PromElectroAvtomat.ru

CAST ON AND KNITTING

For practice, using light yarn work cast-on and knit for DOUBLE RIB following operation table below.

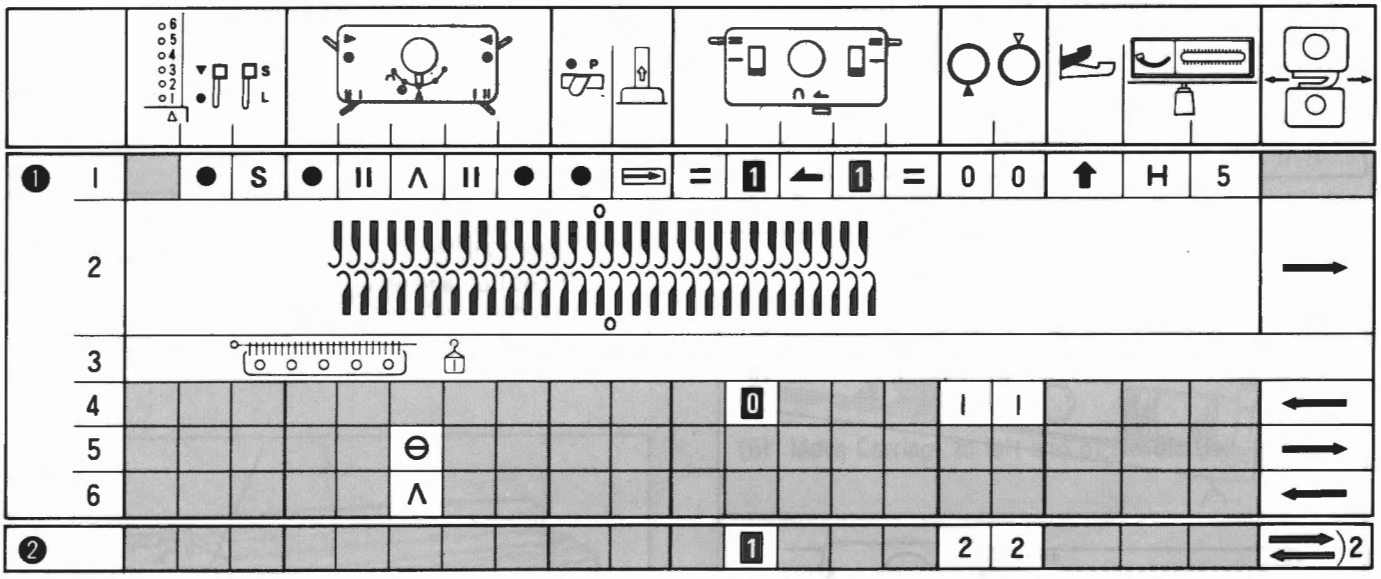

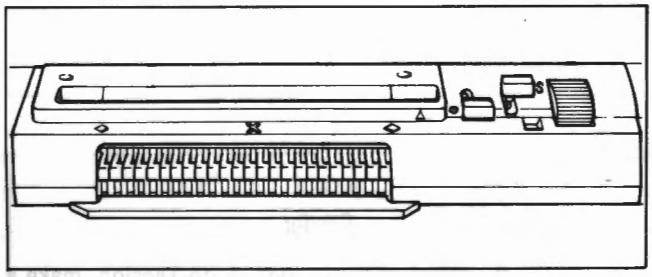

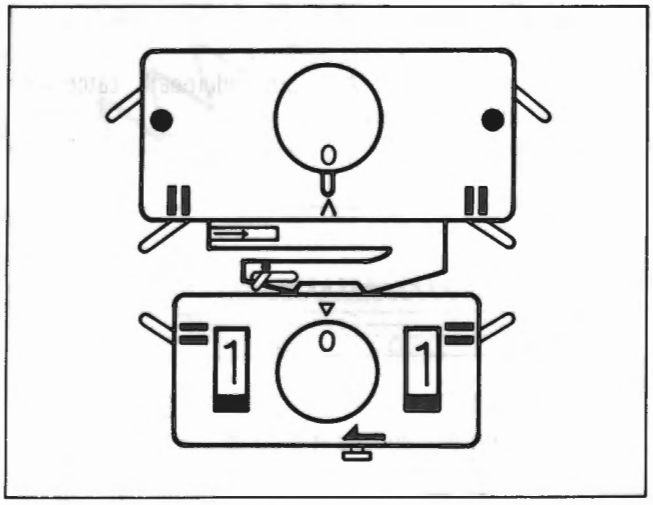

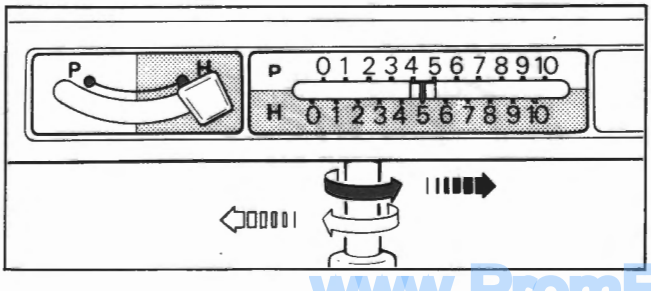

CAST-ON

❶ – 1 **Set machine controls for the initial row.**

PATTERN PANEL

Punch Card not in use.
Stop Knob.....●
L Knob.....S

KNITTER CARRIAGE

Side Levers (left & right).....●
Russel Levers (left & right).....II
Cam Lever.....STOCKINET (Λ, O)

RIBBER ARM

Auxiliary Yarn Feeder Lever.....●
Driving Lever.....resting position

RIBBER CARRIAGE

Russel Levers (left & right).....=
Set Levers (left & right).....1
Pick Knob.....

STITCH DIALS (Knitter & Ribber)... 0

RIBBER NEEDLE BED

Pile Levers (left & right).....upper position
Half-Pitch Lever.....H
Swing Indicator.....5

www.PromElectroAvtomat.ru

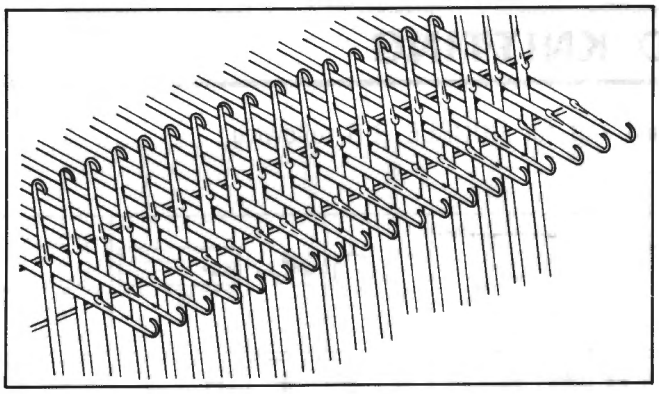

❶ – 2 Arrange needles for knitting the initial row.

1. Arrange needles of both beds for cast-on.

(1) On both of Knitter and Ribber Beds, push 25 needles on each side of centre(0) up to D position.

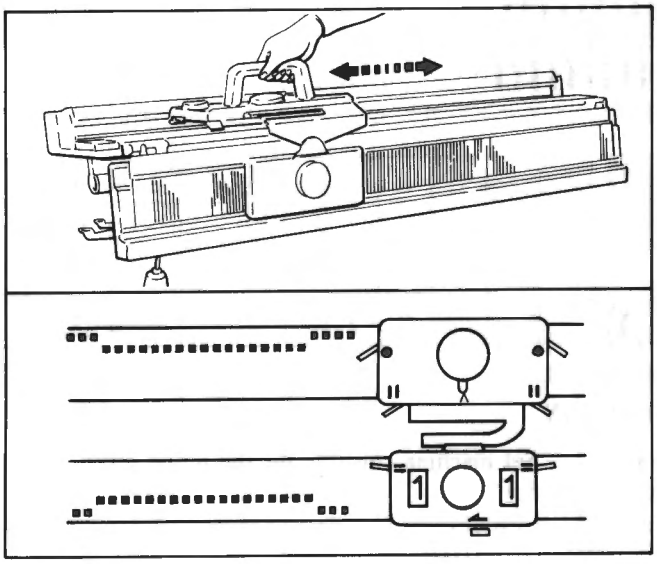

(2) Move Carriage 2–3 times carefully across needles in D position and leave it at right side.
(Needles in D position will be aligned in B position on both beds.)

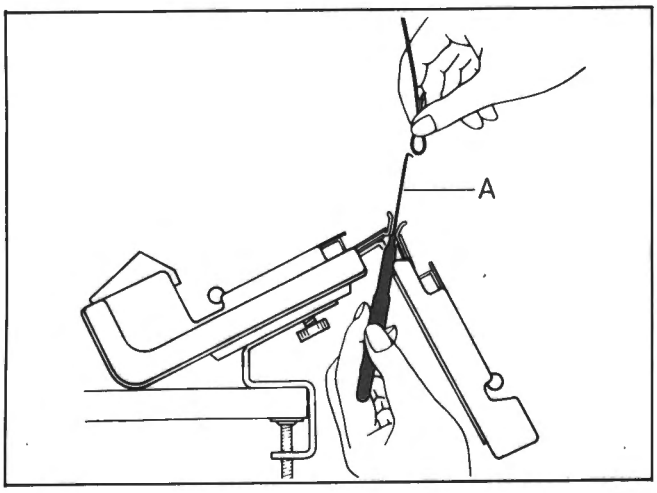

2. Thread yarn into Yarn Feeder.

(1) After threading yarn through Auto-Tension, make a loop at the end of yarn and hold it at the left side of both beds.

(2) Insert Hook Tool "A" from underneath, catch yarn end, and pull it down.

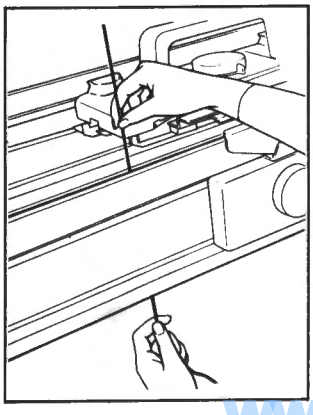

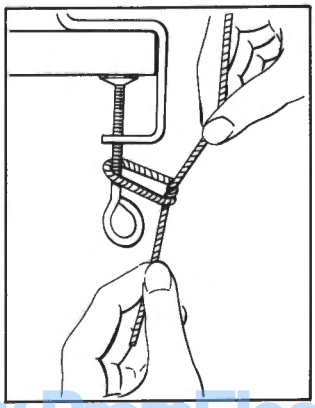

(3) Hold yarn end and tie it around Clamp screw.

www.PromElectroAvtomat.ru

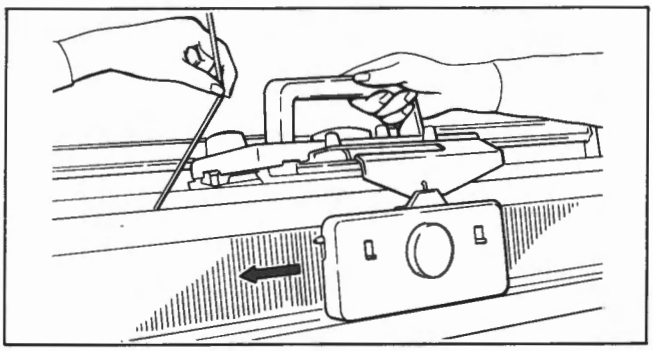

(4) Move Carriage from right to left till yarn goes into Yarn Feeder.

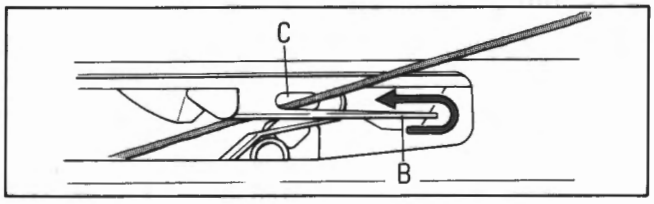

(5) Guide yarn along Yarn Guide "B" to thread it into Main Yarn Feeder "C".

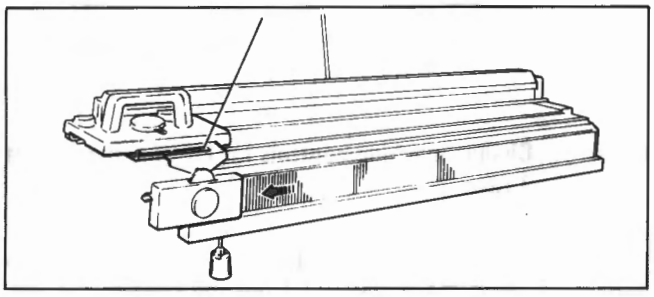

(6) Move Carriage to left end of Needle Bed.

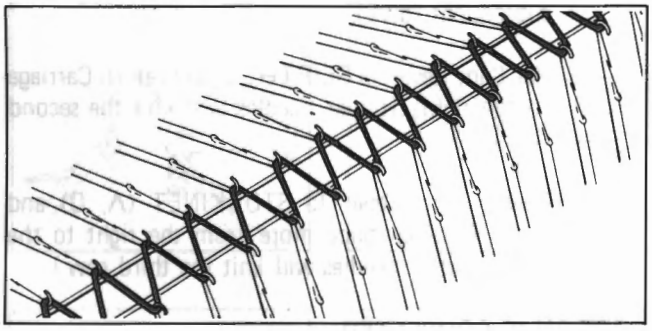

3. Knit the initial row.

Take up slack of yarn and move Carriage from the left to the right.

Yarn will be hooked alternately on Knitter and Ribber needles in zigzag.

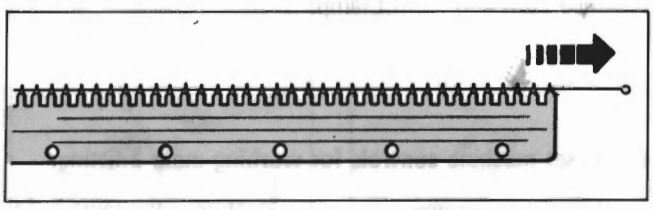

❶ – 3 Suspend Cast-on Comb with Weights.

1. Suspend Cast-on Comb.

(1) Take out short Cast-on Comb (100-needle) and remove wire from its teeth.

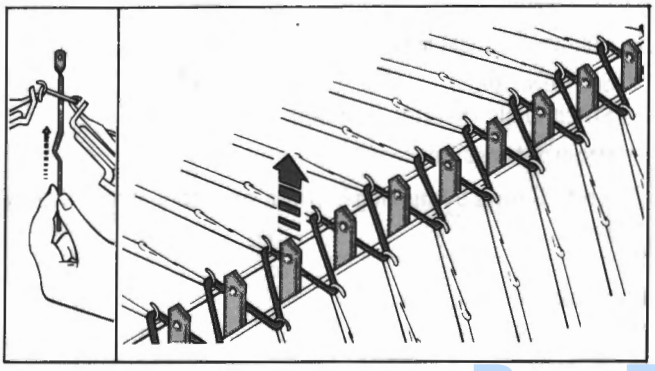

(2) From underneath, insert Comb between Knitter and Ribber Bed, then push it carefully upwards until teeth clear zigzagged yarn.

Hang Comb so that it is balanced horizontally between working needles.

www.PromElectroAvtomat.ru

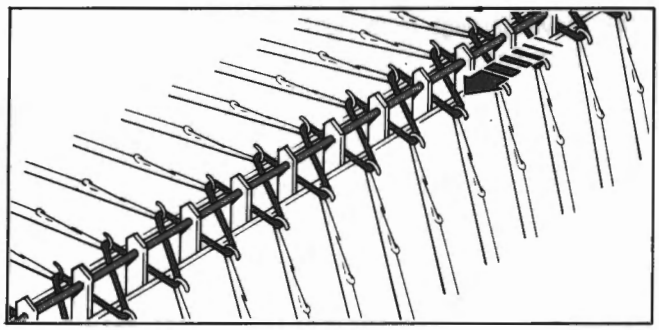

(3) Insert Wire through holes of Cast-on Comb teeth.

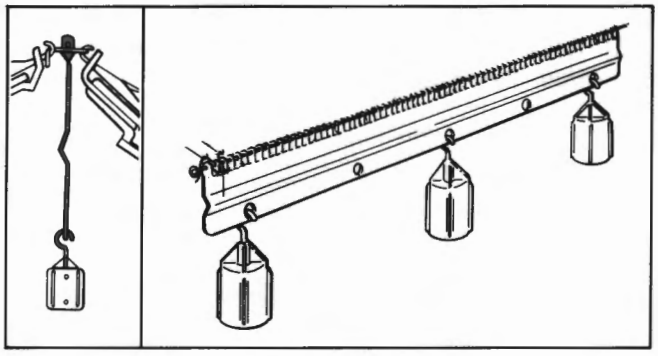

2. Hook Weights.

Use two Ribber Weights (large) and hook them onto left and right sides of Cast-on Comb.

For your reference use up to 80 needles 2 Weights
120 needles 3 Weights
160 needles 4 Weights
200 needles 5 Weights

Hook Weights at even intervals.

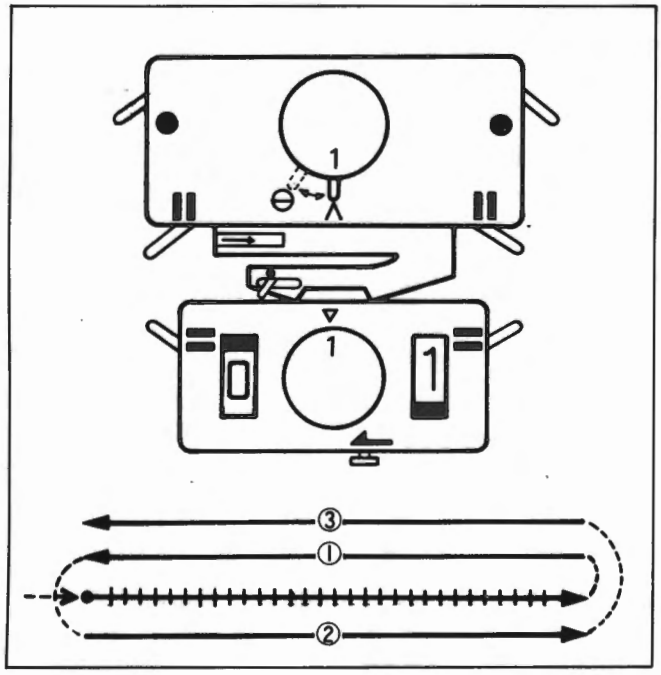

❶–4~6 **Change machine controls for knitting subsequent 3 rows.**

– 4 Set left Set Lever to **0** and both Stitch Dials to 1, then move Carriage from the right to the left. (Knitter needles will knit the first row of the subsequent rows.)

– 5 Set Cam Lever to SLIP (⊖, S) and return Carriage to the right. (Ribber needles will knit the second row.)

– 6 Re-set Cam Lever to STOCKINET (Λ, O) and move Carriage once more from the right to the left. (Knitter needles will knit the third row.)

CAST-ON IS COMPLETED.

Remove yarn end from Clamp.

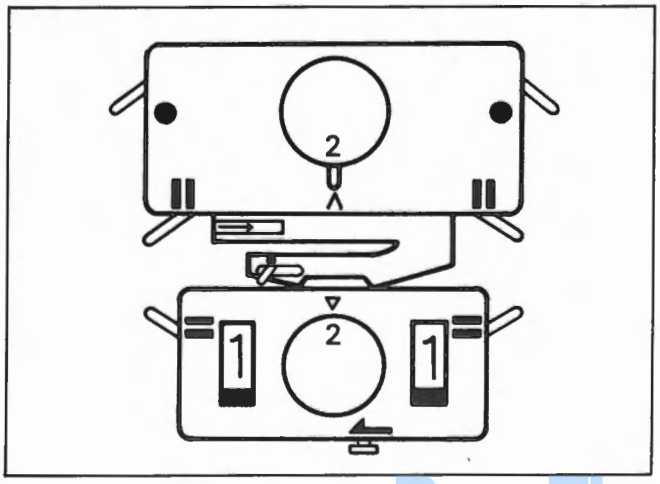

❷ **Re-set machine controls for working main knitting.**

(Needle arrangement for main knitting is the same as for cast-on.)

1. Change Carriage settings.
   Set Lever **(left)**.....**1**
   Stitch Dials (Knitter & Ribber)..... 2
   Other settings unchanged.
2. Knit 20 rows by moving Carriage smoothly across Needle Bed.

Continue on next page.

www.PromElectroAvtomat.ru

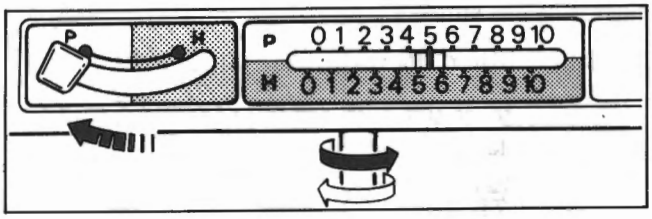

For practice, continue to knit K1.P1. RIB following instructions.

1. Set Half-Pitch Lever to P.

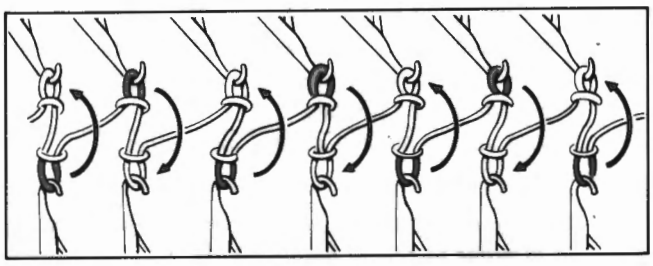

2. Transfer every other stitch from Knitter onto Ribber and from Ribber onto Knitter alternately to rearrange the needles for K1.P1. RIB using Double-eye Transfer Tool as follows.

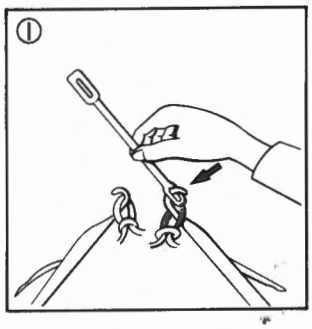

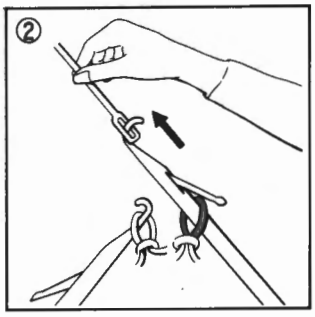

① Insert eye of Double-eye Transfer Tool into Ribber needle hook.

② Pull Ribber needle to D position.

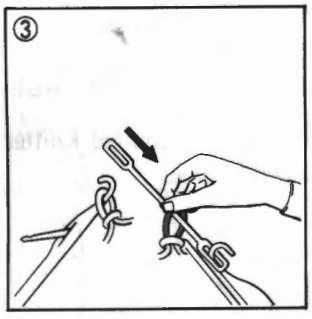

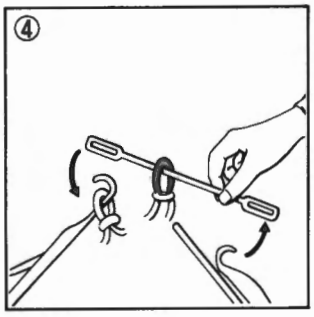

③ Push Ribber needle to A position.

④ Remove eye of Transfer Tool from Ribber needle hook.

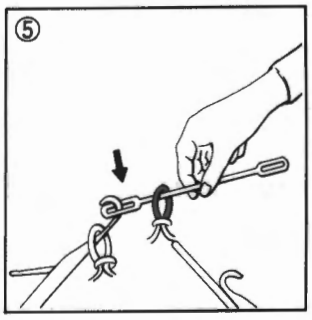

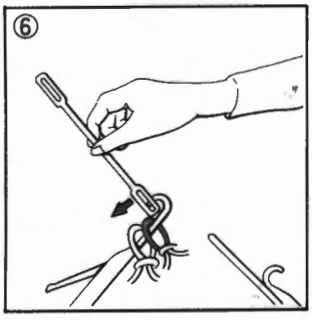

⑤ Insert opposite eye into Knitter needle hook.

⑥ Tilt Transfer Tool until stitch slides into Knitter needle hook.
Remove Transfer Tool.

Push needle in B position slightly towards A position ensuring that transferred stitch lies correctly in needle hook.

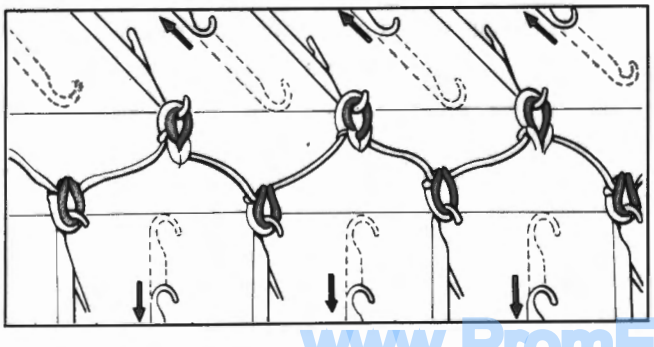

Continue to transfer every other stitch till all the needles are aligned as shown.

Ensure empty needles are in A position.

3. Knit 20 rows, then continue on next page.

www.PromElectroAvtomat.ru

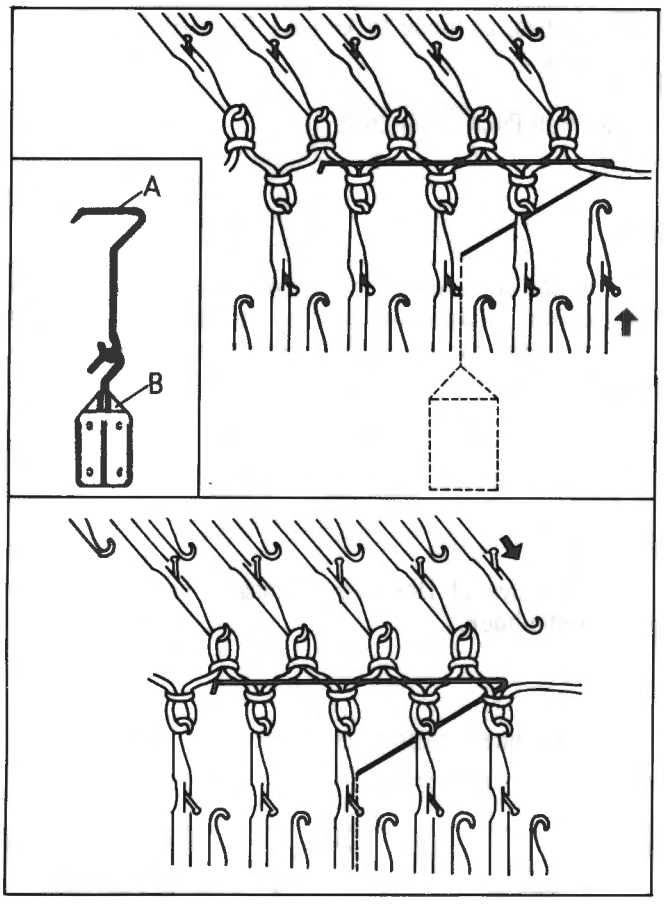

Increasing one stitch

POSSIBLE ONLY ON CARRIAGE SIDE.

(1) On Carriage side push one empty needle opposite the end stitch from A to B position.

(2) Use Side Hanger "A" with Edge Weight "B" attached, hereafter called Edge Weight.
From underneath, insert hook of Side Hanger between Knitter and Ribber Bed, push upwards, and lay hook over zigzag stitches.
Ensure yarn is hooked inside Side Hanger.

After approx. 10 rows are knitted, move Edge Weight up in order to obtain better results.

(3) Continue knitting.

PRACTICE a few times on both sides.

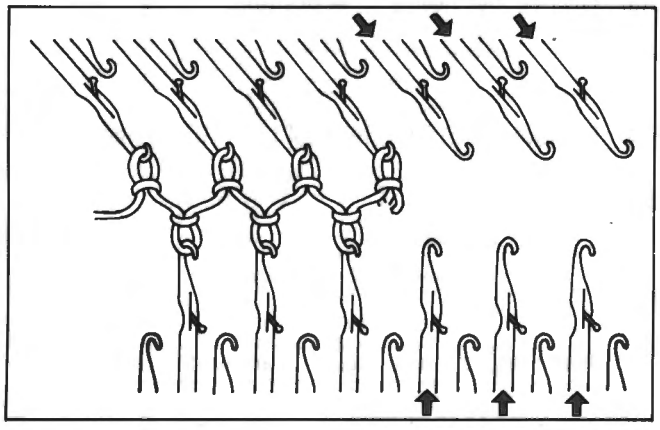

Increasing multiple stitches

POSSIBLE ONLY ON OPPOSITE SIDE OF CARRIAGE.

(1) On opposite side of Carriage, push required Knitter and Ribber needles up to B position.

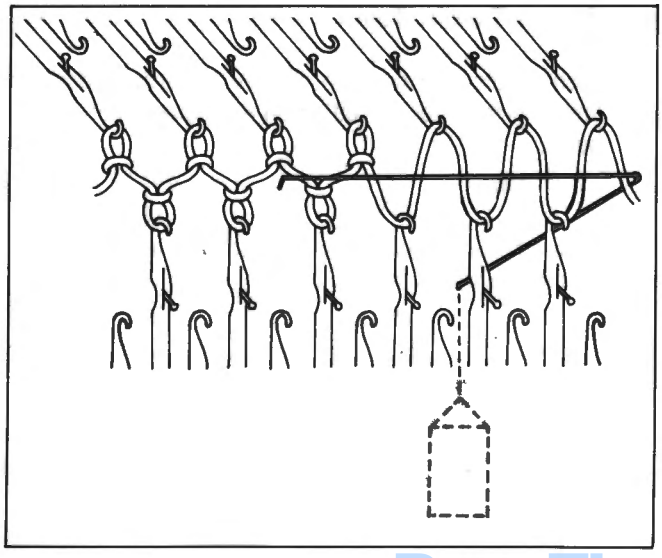

(2) Knit 1 row.
Yarn lies alternately in a zigzag pattern in Knitter and Ribber needle hooks.

(3) Hang Edge Weight and continue to knit.

PRACTICE once on left and right sides for increasing 6 stitches.

www.PromElectroAvtomat.ru

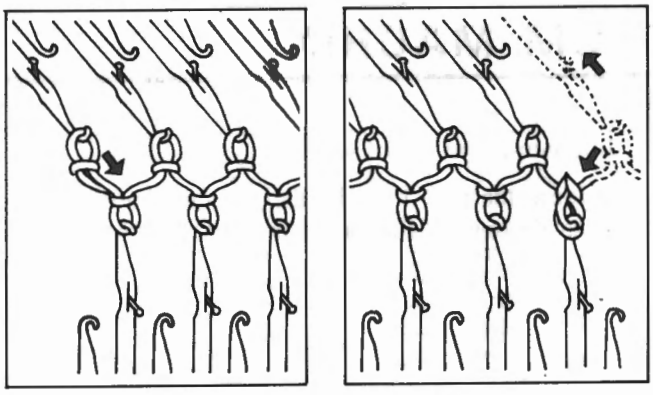

Decreasing 1 stitch

POSSIBLE ON BOTH SIDES.

Using Double-eye Transfer Tool, transfer last stitch either from Ribber to Knitter or vice versa.

Push empty needle back to A position and continue knitting.

PRACTICE a few times on both sides.

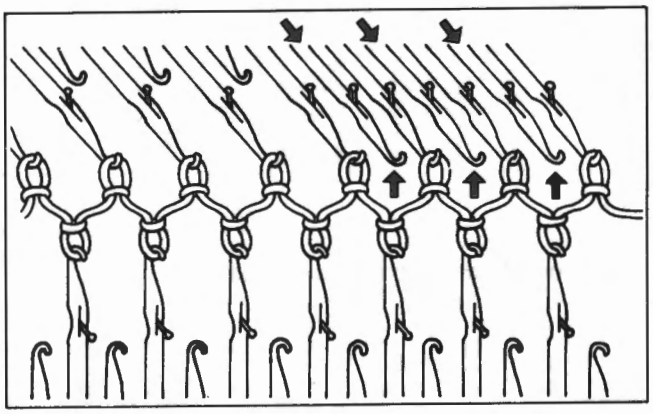

Decreasing multiple stitches

POSSIBLE ONLY ON CARRIAGE SIDE.

(1) Push up required number of empty Knitter needles to B position.

(2) Transfer stitches from Ribber needles to their corresponding empty Knitter needles.

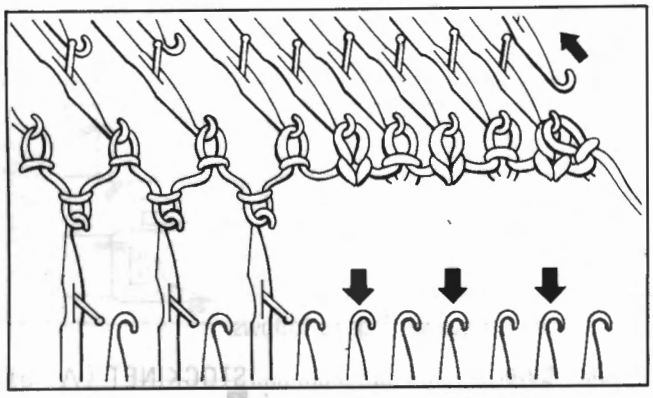

(3) Push empty Ribber needles back to A position.

(4) Transfer end stitch to its adjacent needle and push empty needle back to A position.

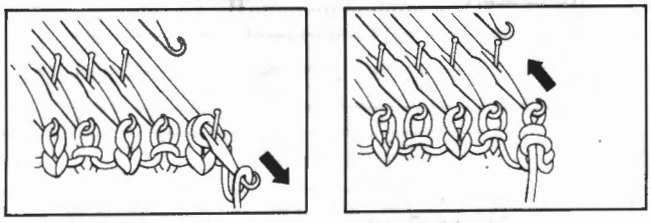

(5) Push end working needle up to D position to have both stitches behind latch, and lay yarn inside needle hook.

(6) Hold yarn end slightly down and push the needle back to B position.

Repeat steps (4)–(6) until required number of stitches have been decreased.

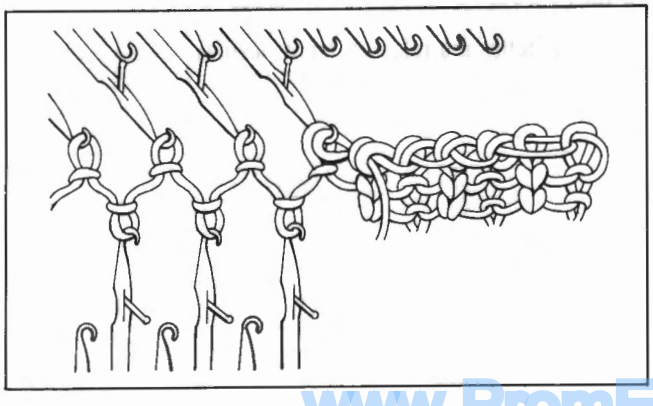

(7) Place the last stitch decreased onto adjacent needle.

PRACTICE once on left and right sides for decreasing 6 stitches.

www.PromElectroAvtomat.ru

REMOVE FABRIC FROM MACHINE

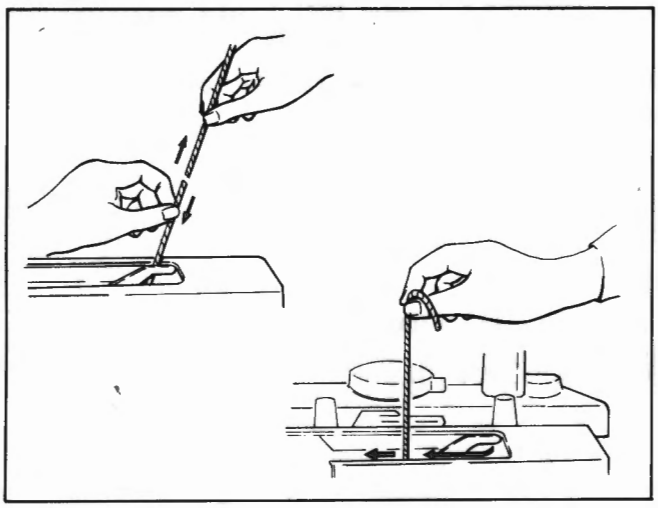

1. Cut yarn above Yarn Feeder.

   Remove the yarn from Feeder and drop yarn end between Knitter and Ribber sinker posts.

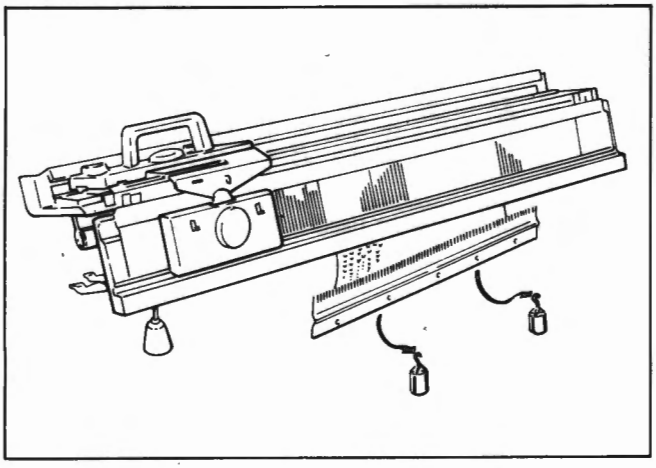

2. Remove Weights from Cast-on Comb.

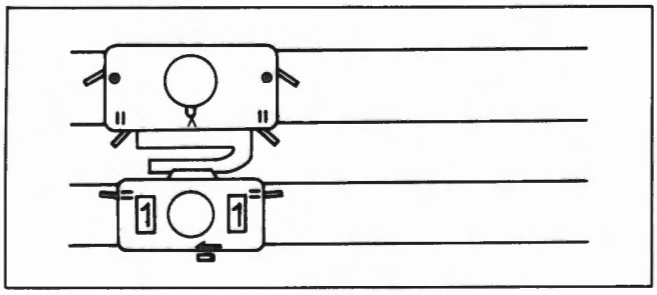

3. Change Carriage settings as follows.

   Cam Lever.....STOCKINET (∧, O)
   Set Levers.....1
   Russel Levers.....II

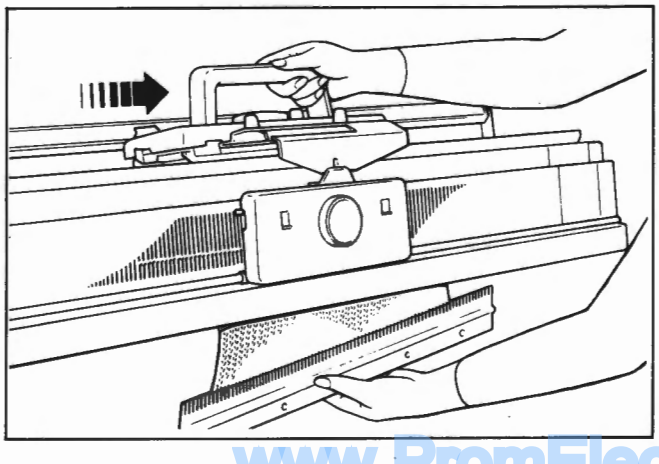

4. Holding Cast-on Comb, move Carriage once across needles.

   The stitches are released from needles.

www.PromElectroAvtomat.ru

CAST ON FOR TIGHTER EDGE

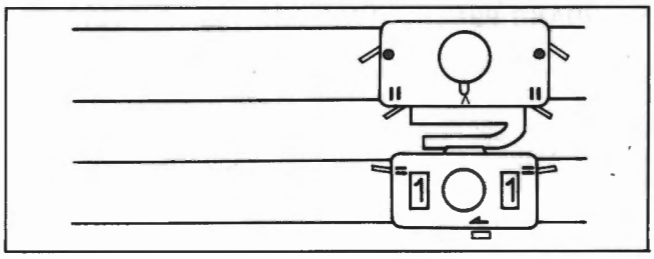

To make the cast-on edge of the fabric tighter, when knitting with thinner yarn, set the Carriages as instructed in the operation table, but operate them following the procedure set forth below:–

❶ – 1 Set machine controls for the initial row and have Carriage on the right side.

❶ – 2 Arrange needles, and knit the initial row from the right to the left.

❶ – 3 Suspend Cast-on Comb with Weights.

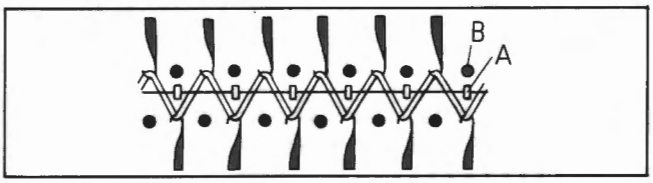

Insert Cast-on Comb so that its teeth "A" confront with Knitter Sinker Posts "B" as illustrated.

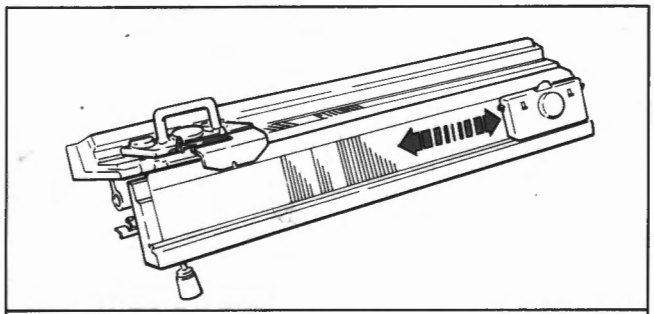

- Disconnect Ribber Carriage and move it twice accross the needles to drop stitches on Ribber needles.

If Cast-on Comb is suspended incorrectly, it will drop onto the floor.

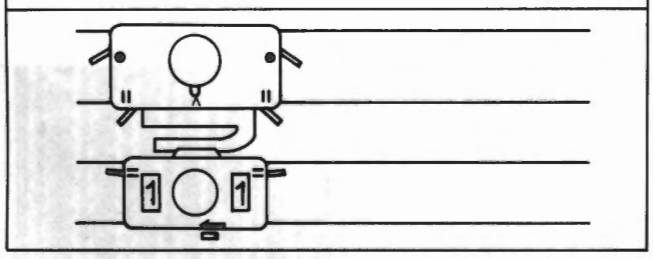

- Connect Ribber Carriage and knit one row with same Carriage settings.

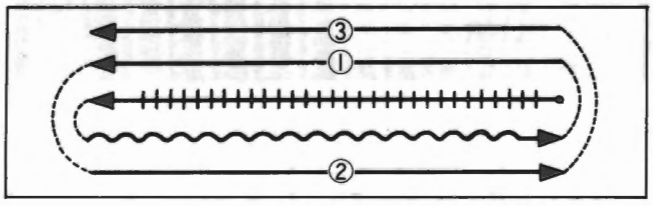

❶–4～❶–6

As required in operation table, knit subsequent 3 rows.

CAST-ON FOR TIGHTER EDGE IS COMPLETED.

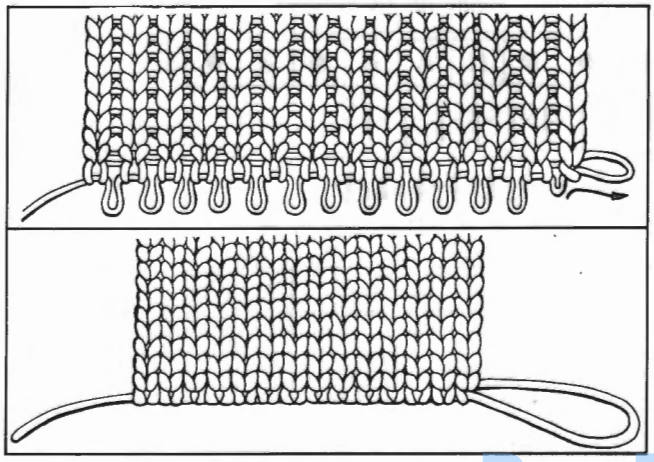

When the garment has been completed, pull the yarn of the initial row of cast-on towards the direction opposite to its yarn end slightly before steaming it with a steam iron so that the stitches on the initial row align neatly.

After steaming the edge has been finished, pull out the yarn completely in the same direction as above.

www.PromElectroAvtomat.ru

VARIOUS RIB STITCHES

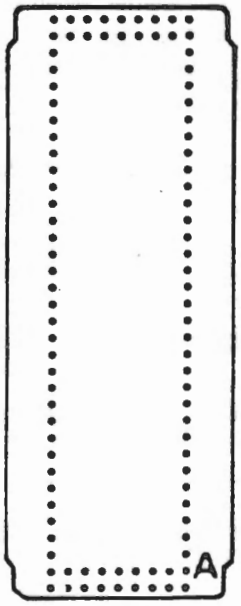

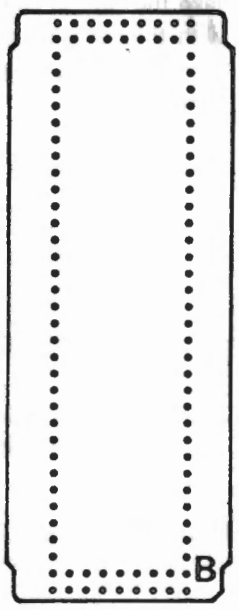

STANDARD PUNCH CARDS FOR RIB KNITTING

10 Punch Cards are numbered No.1 (R–2) ~ No.10 (R–2).

Each Punch Card can be used in two ways and is marked "A" and "B".

Instructions for setting Punch Card are given in Instruction Book of Knitter (Operation Manual).

Card No.	A	B	C	D	E	F
No. 1 (R–2)				O		
No. 2 (R–2)				O		
No. 3 (R–2)				O		
No. 4 (R–2)				O		
No. 5 (R–2)				O		
No. 6 (R–2)				O		
No. 7 (R–2)					O	O
No. 8 (R–2)					O	O
No. 9 (R–2)	O				O	O
No.10 (R–2)	O				O	O

With Punch Cards, the following patterns can be produced.

A – PUNCH PIN TUCK
B – PUNCH TUCK RIB
C – TUCK RIB STITCH
D – DRIVE LACE
E – MESH KNITTING
F – PILE RIB

No. 1					O	
No. 2		O	O			
No. 4		O	O			
No. 7		O	O			
No. 8		O	O			
No. 9		O	O			
No.10		O	O		O	
No.11		O	O			
No.12		O	O			
No.13					O	
No.17					O	

Of the punch cards supplied with knitter, those listed opposite are usable for rib stitches.

www.PromElectroAvtomat.ru

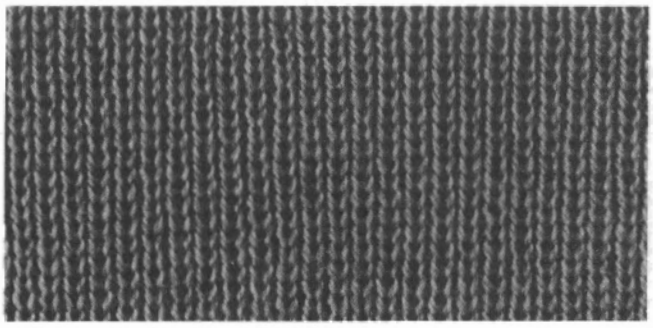

DOUBLE RIB

Use every needle of Knitter and Ribber.

The sample is knitted using thin yarn.

Use Close Knit Bar (refer to page 14).

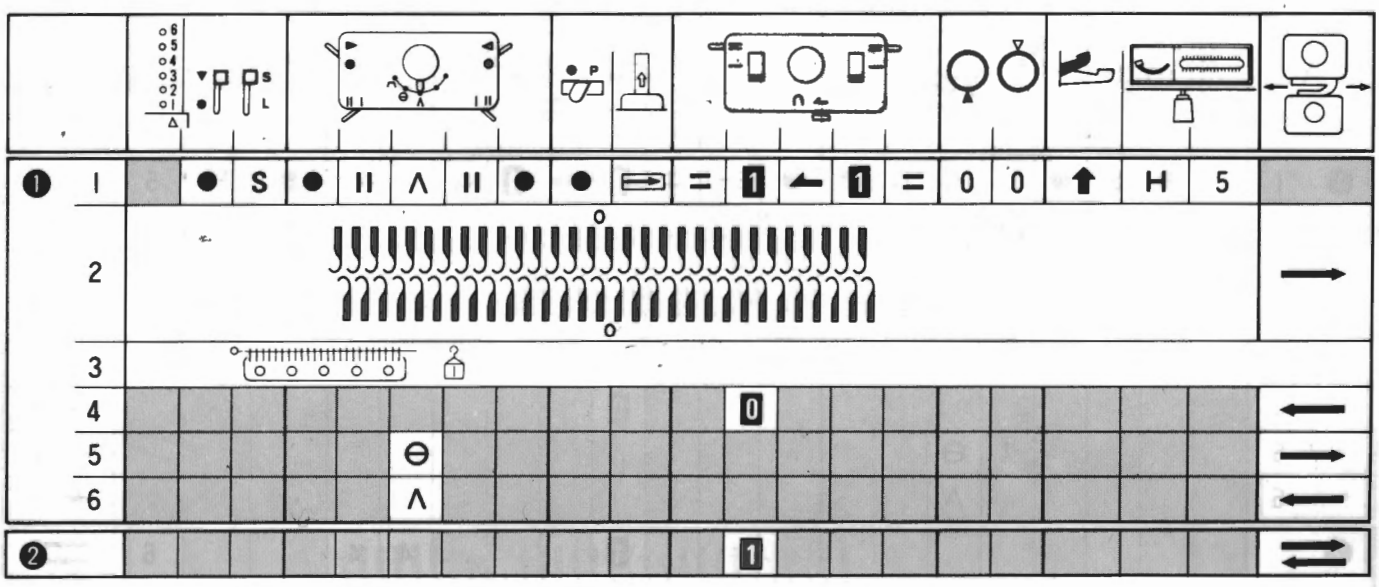

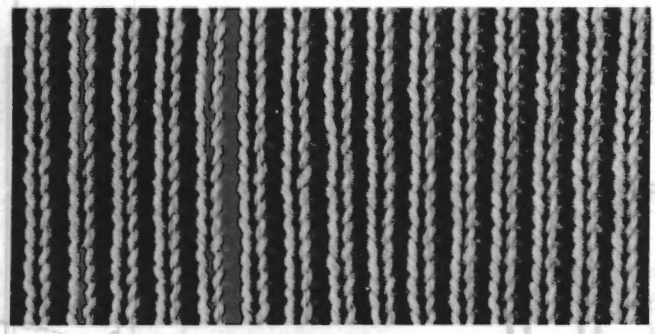

K1. P1. RIB

Use every other needle of Knitter and Ribber.

The sample is knitted using medium yarn.

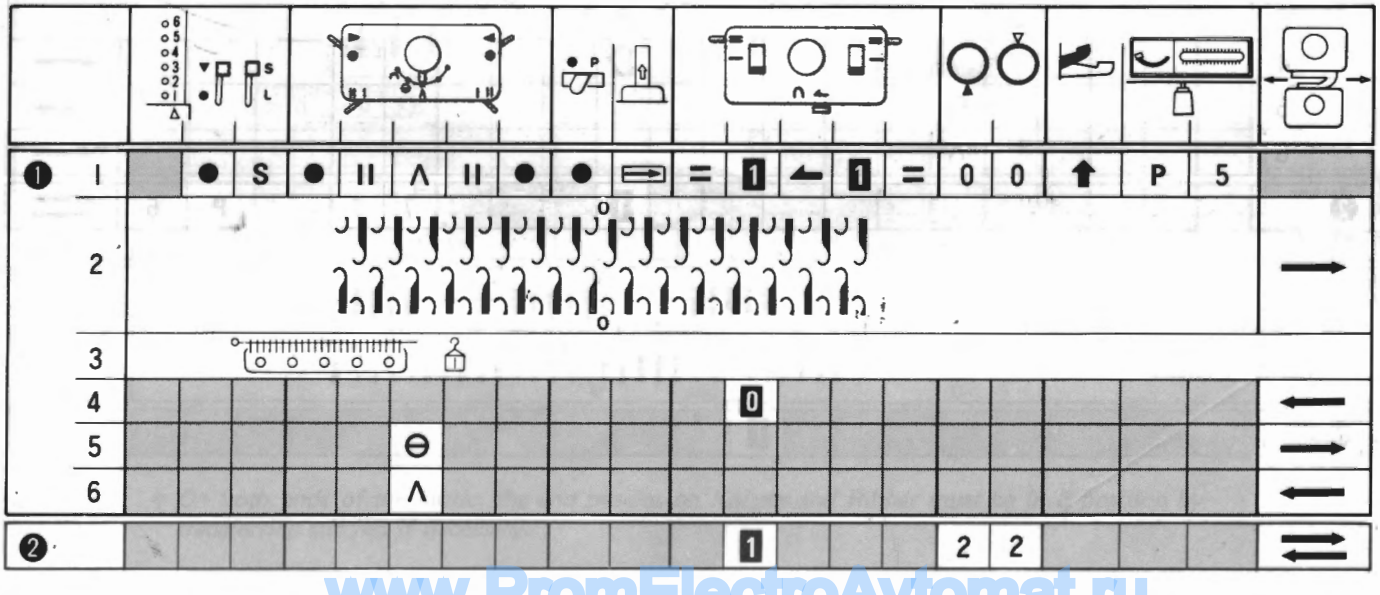

www.PromElectroAvtomat.ru

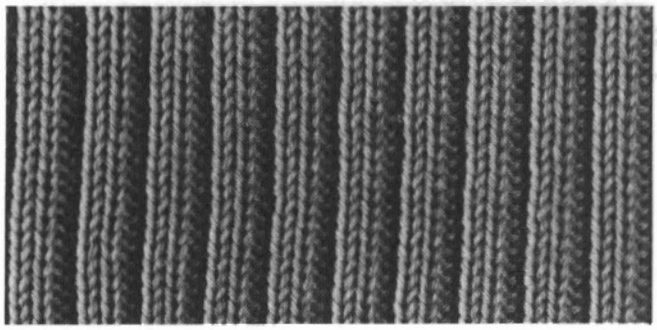

K2. P2. RIB

Two methods for K2. P2. rib are introduced below:–
One is for using medium yarn (Operation Table "A") and the other is for thick yarn (Operation Table "B").

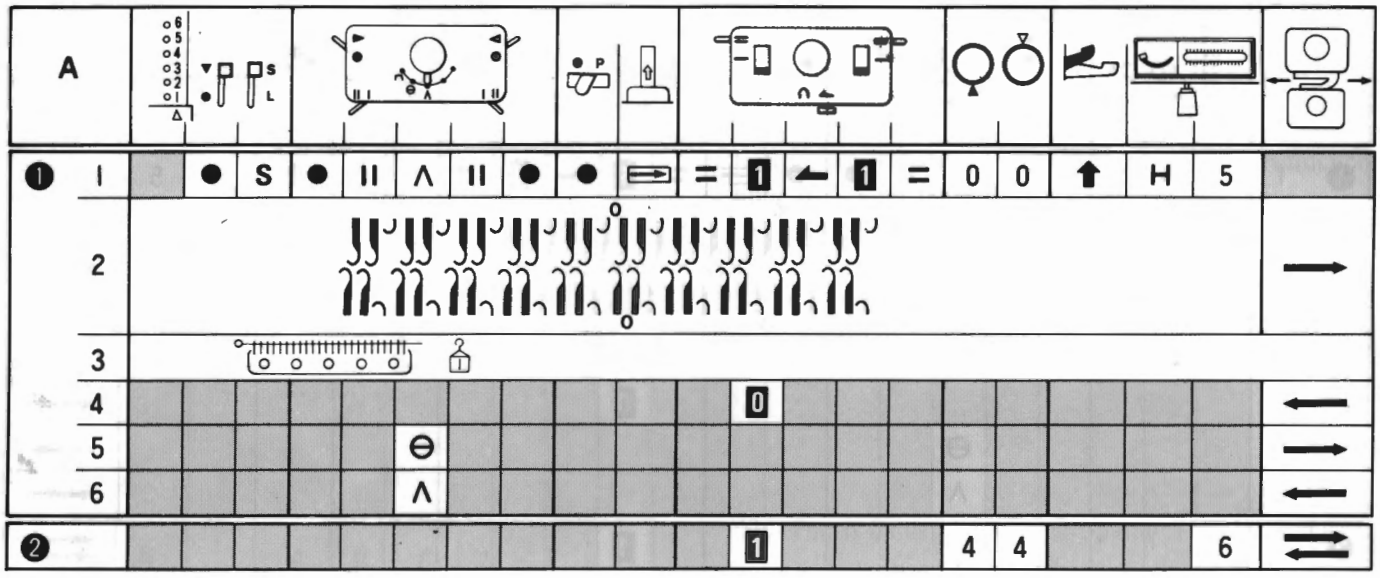

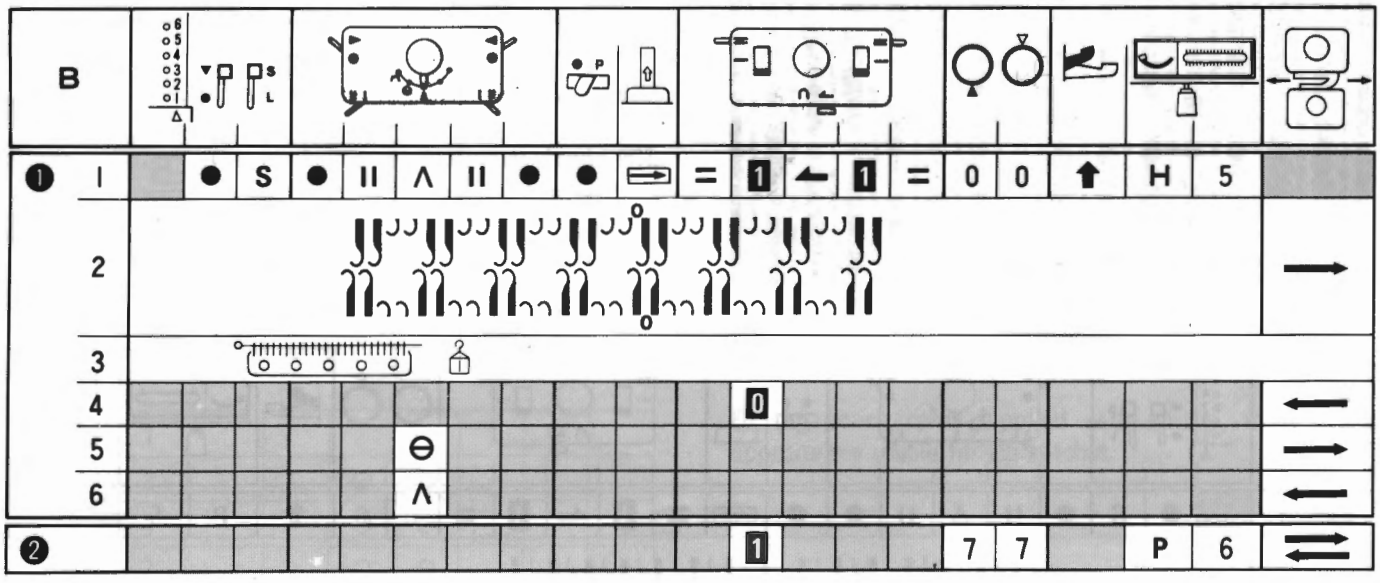

www.PromElectroAvtomat.ru

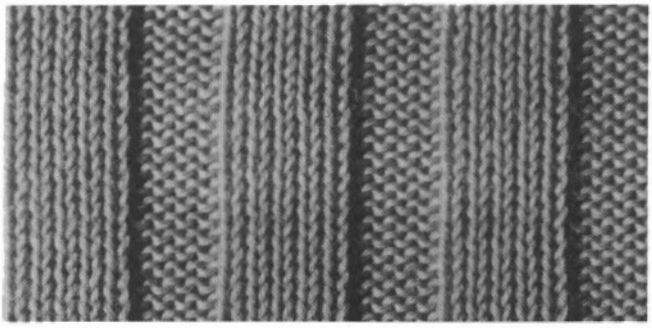

WIDE RIB

This is the rib with more than K3. P3. stitches aligned alternately. (K5. P5. rib is shown as an example.)

Two methods for wide rib are introduced below:—
One is for using medium yarn (Operation Table "A") and the other is for thick yarn (Operation Table "B").

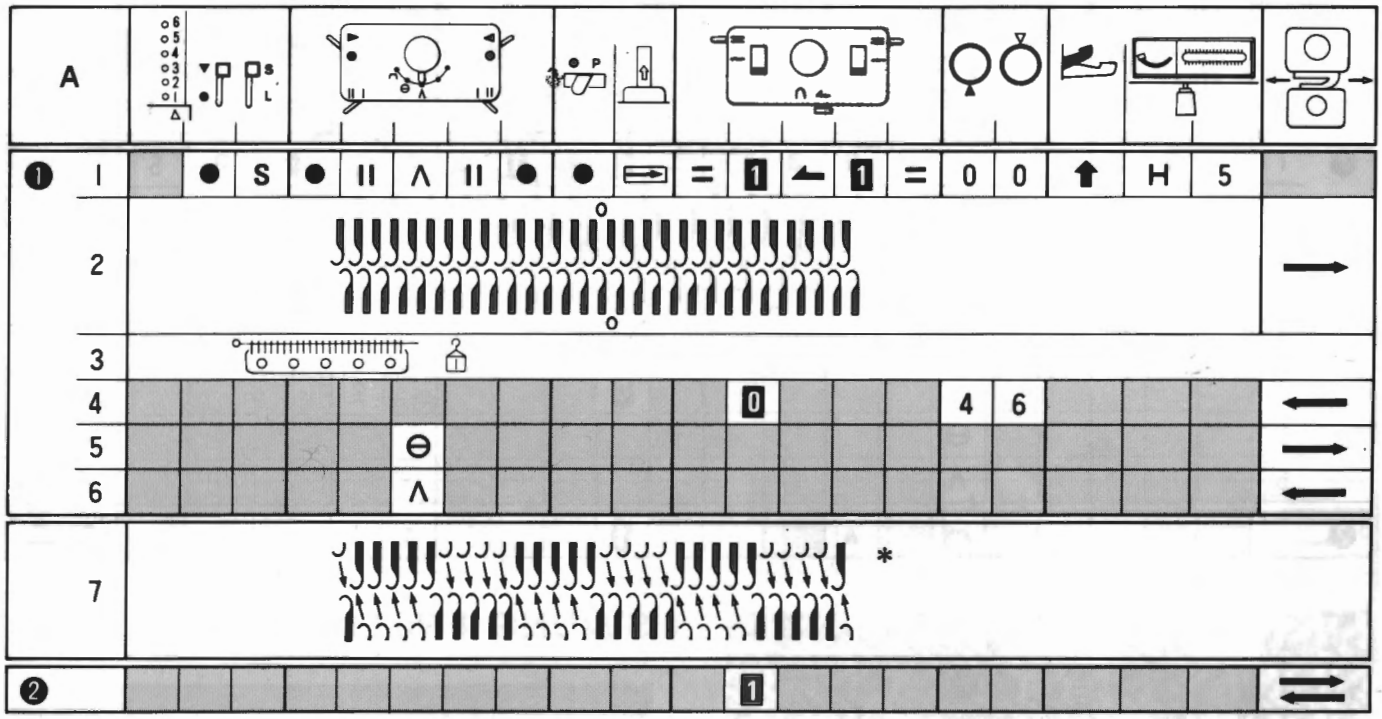

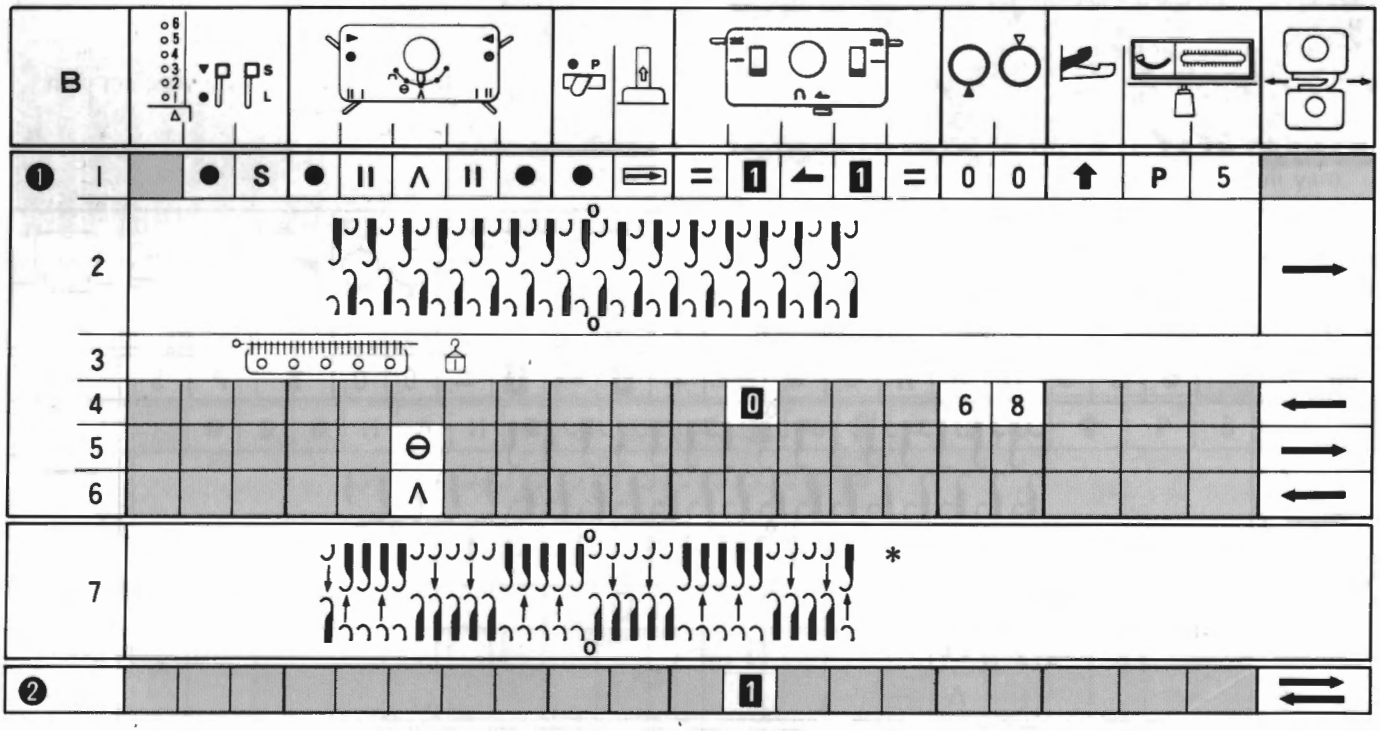

** On both ends of the fabric, the end needles on Knitter and Ribber must be in B position by transferring stitches if necessary.*

www.PromElectroAvtomat.ru

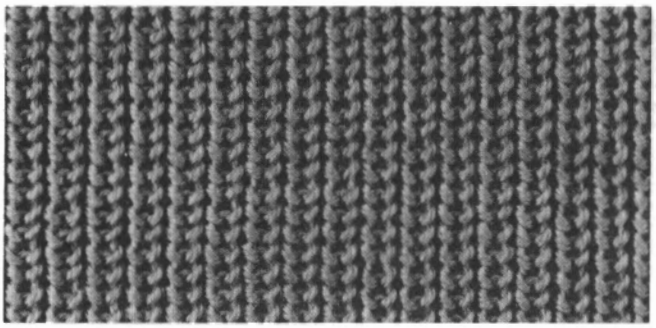

ENGLISH RIB

This is the rib with a tucking effect on one side of the knitting in K1. P1. rib or in double rib.

The sample is knitted in K1. P1. rib using medium yarn.

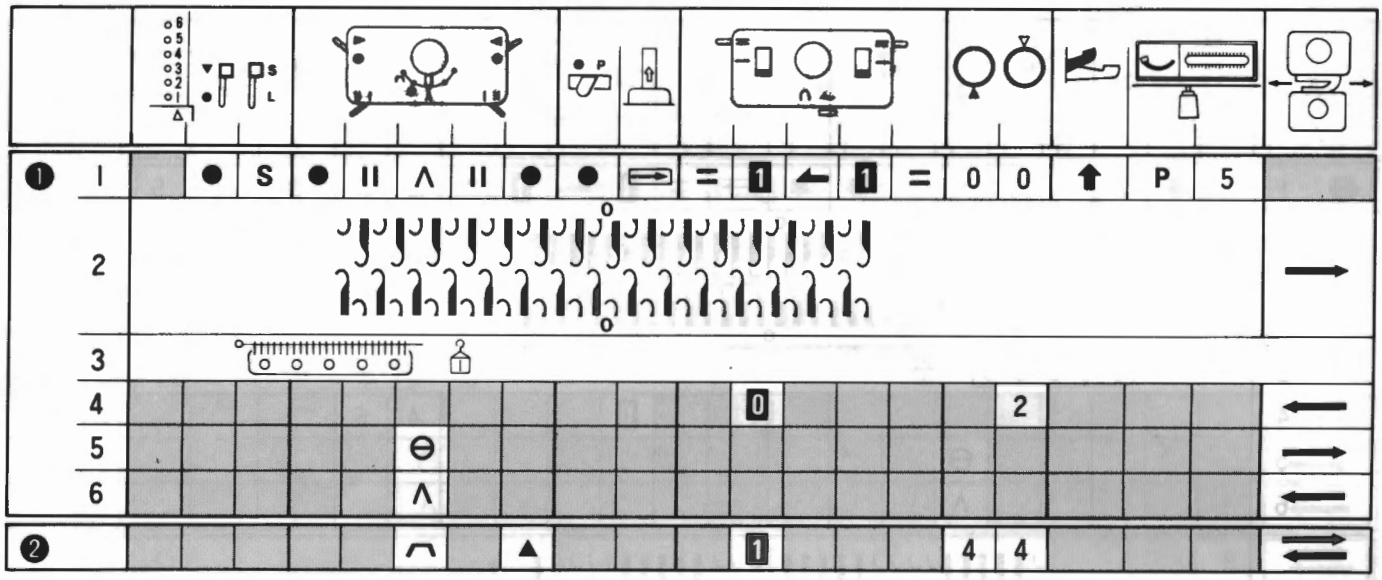

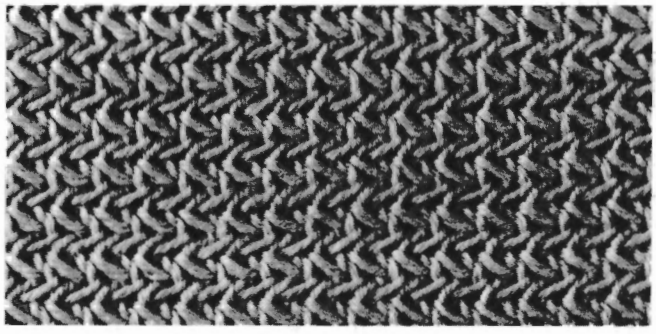

SWUNG ENGLISH RIB

This is the rib with a tucking effect on one side of the knitting applying 2-pitch swing in K1. P1. rib or 1-pitch swing in double rib.

The sample is knitted in K1. P1. rib using medium yarn.

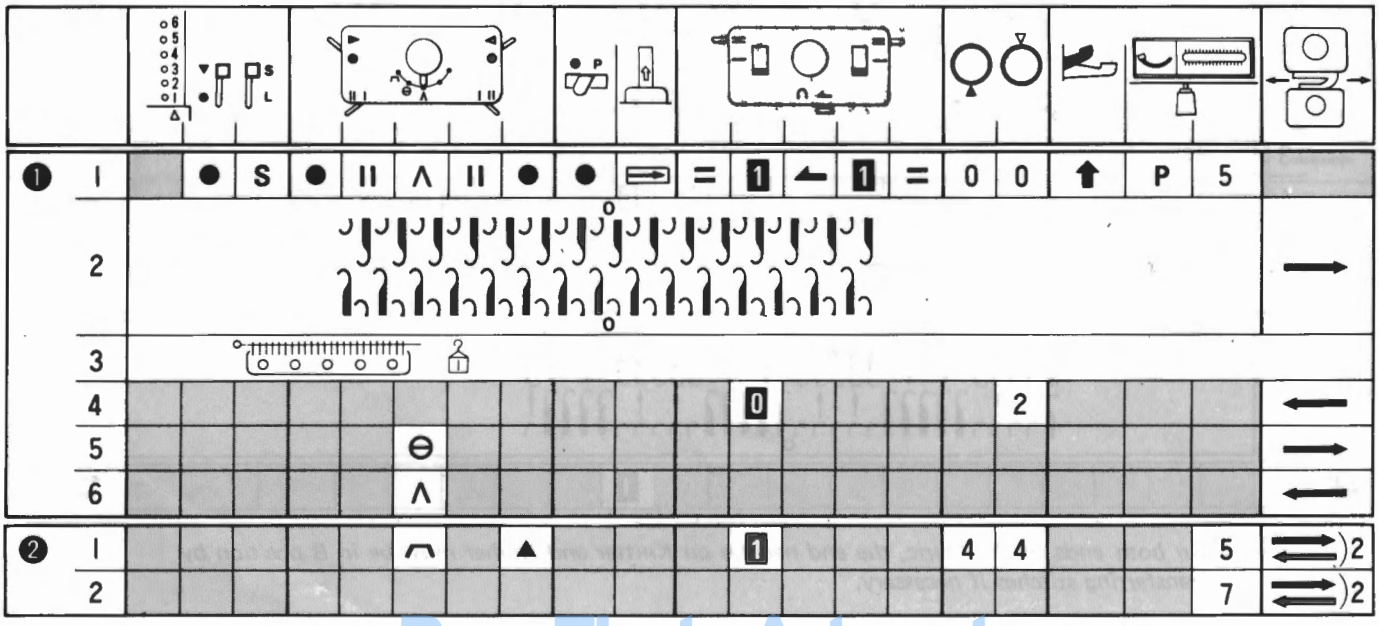

www.PromElectroAvtomat.ru

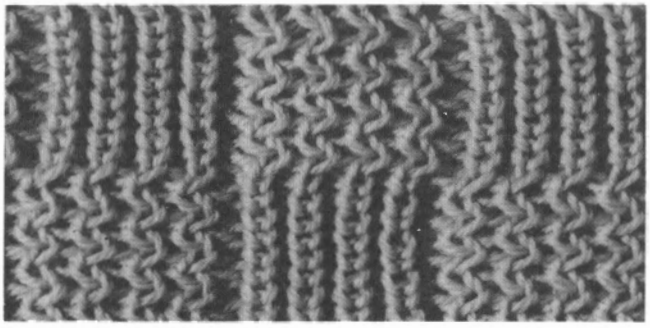

VARIATION OF ENGLISH RIB

This is a knitted fabric in combination of English Rib and Swung English Rib at the same time over the needle arrangement shown in the operation table.

The sample is knitted using medium yarn.

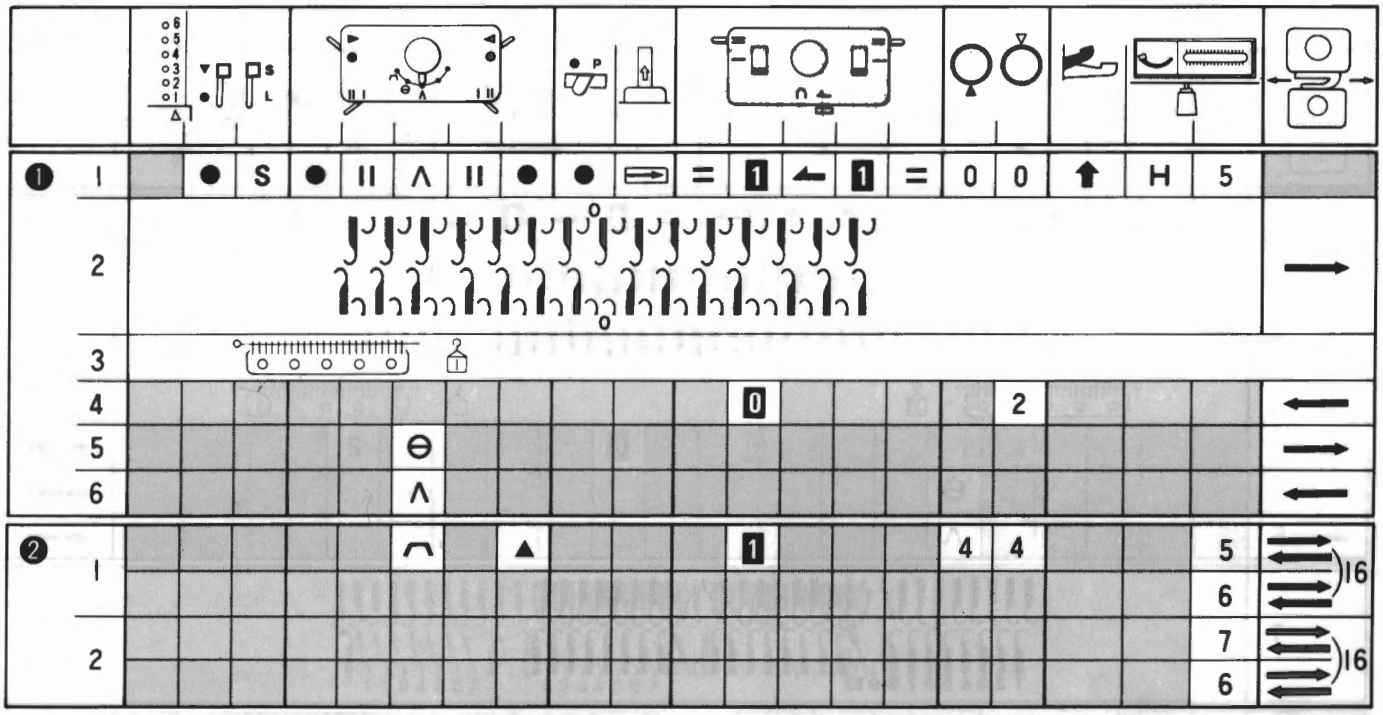

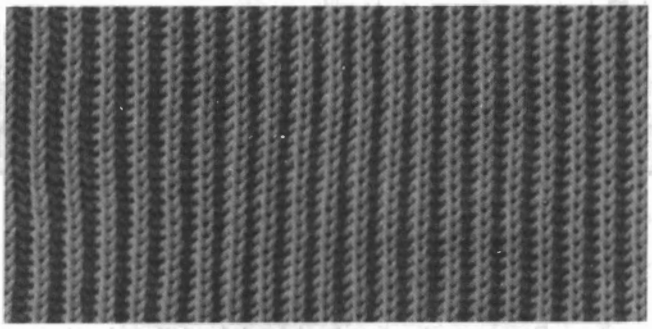

DOUBLE ENGLISH RIB

Tuck stitch on every row, on both sides of the fabric, in K1. P1. or double rib.

The sample is knitted in K1. P1. rib using medium yarn.

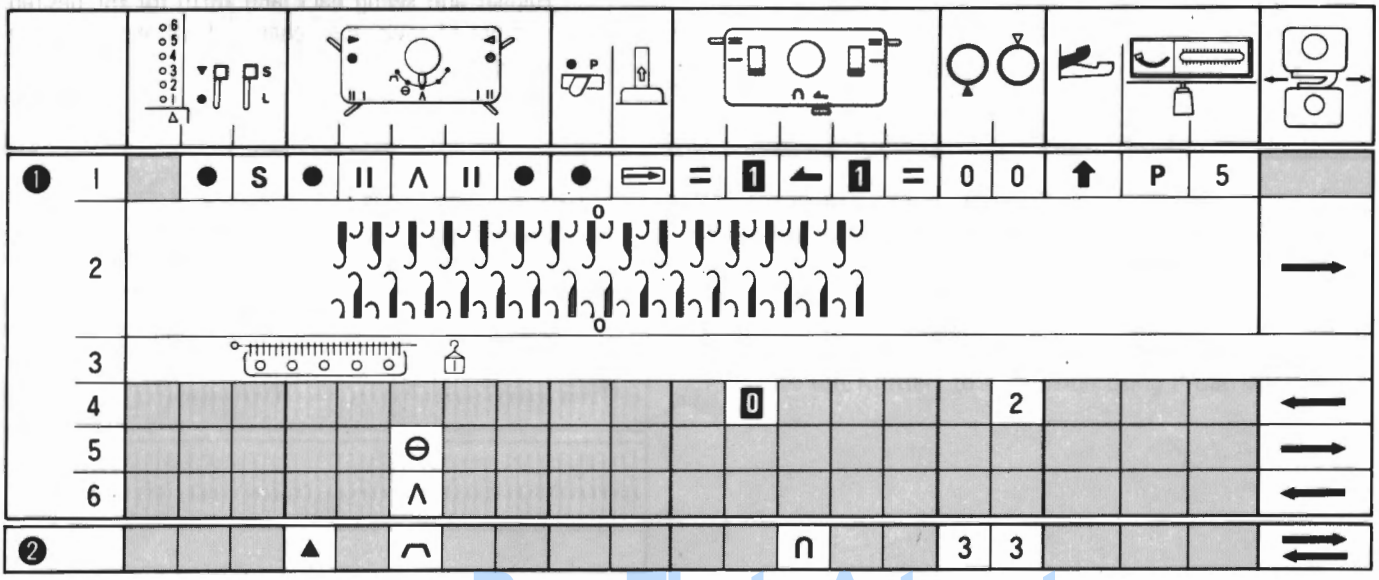

www.PromElectroAvtomat.ru

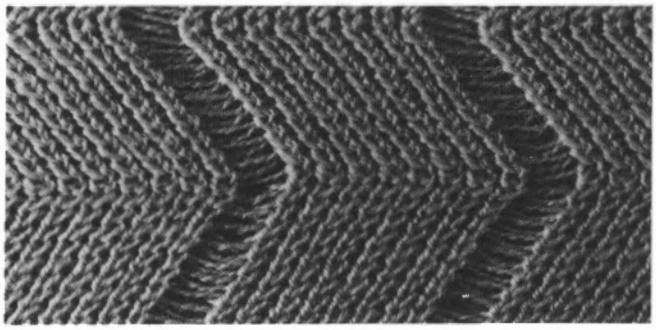

HERRINGBONE SWING

This is a fabric of tuck stitch in combination with swing operation of Ribber.

The sample is knitted in a variation of double rib using thin yarn.

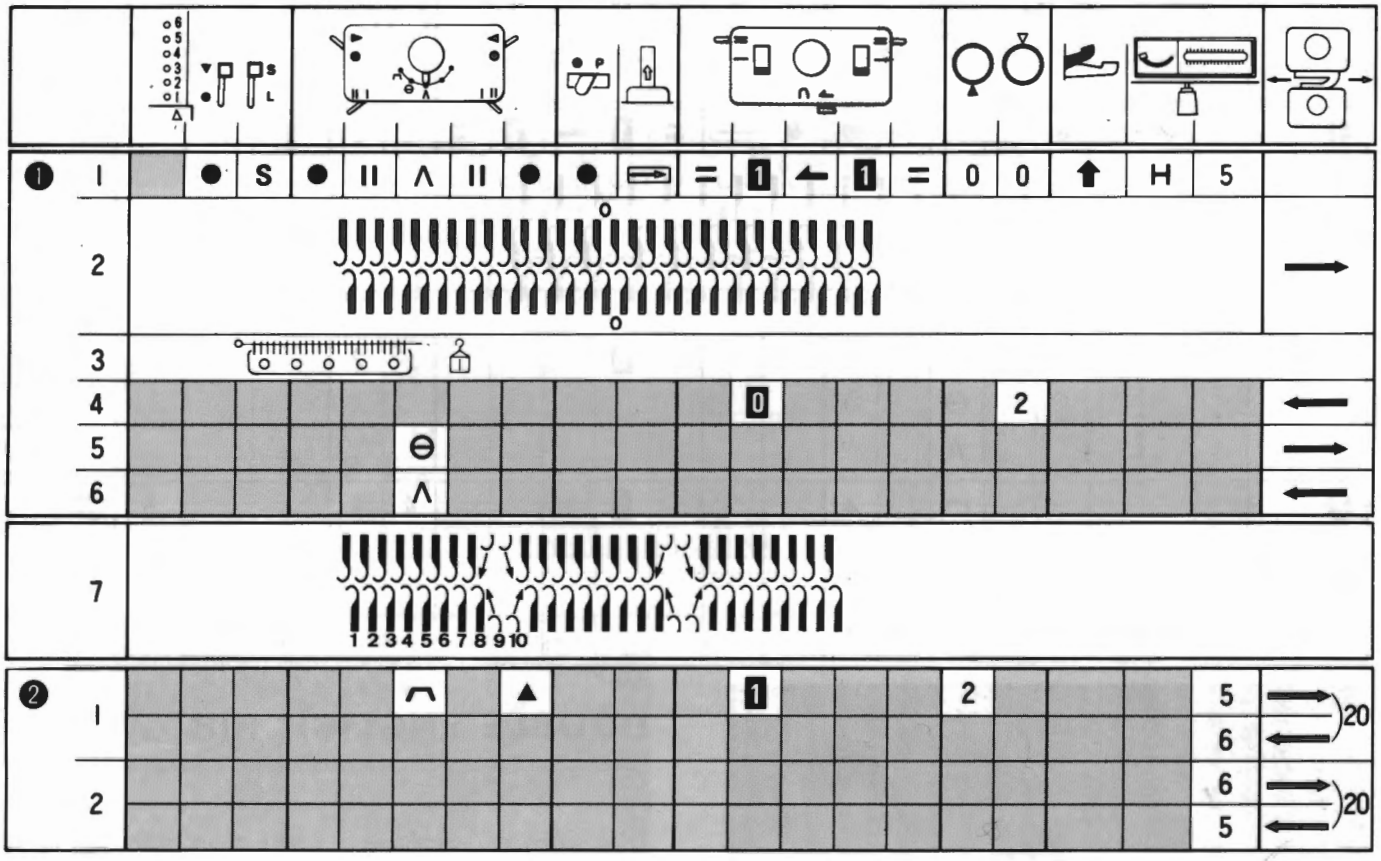

Note: Swing Ribber 2 pitches for K1. P1. rib and 1 pitch for double rib.
Tuck one row on Knitter before you swing it back. Repeat and swing back and forth for the desired number of rows, then change the direction of the swing.

www.PromElectroAvtomat.ru

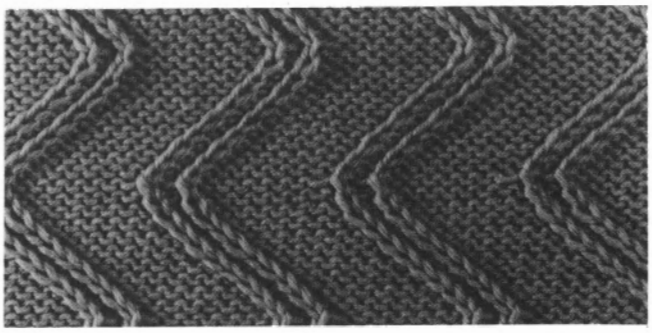

VARIATION SWING

While Knitter Carriage knits in stockinet, Ribber Carriage knits with selected needles making ridges. By swinging Ribber, these ridges make various swung patterns.

The sample is knitted using medium yarn.

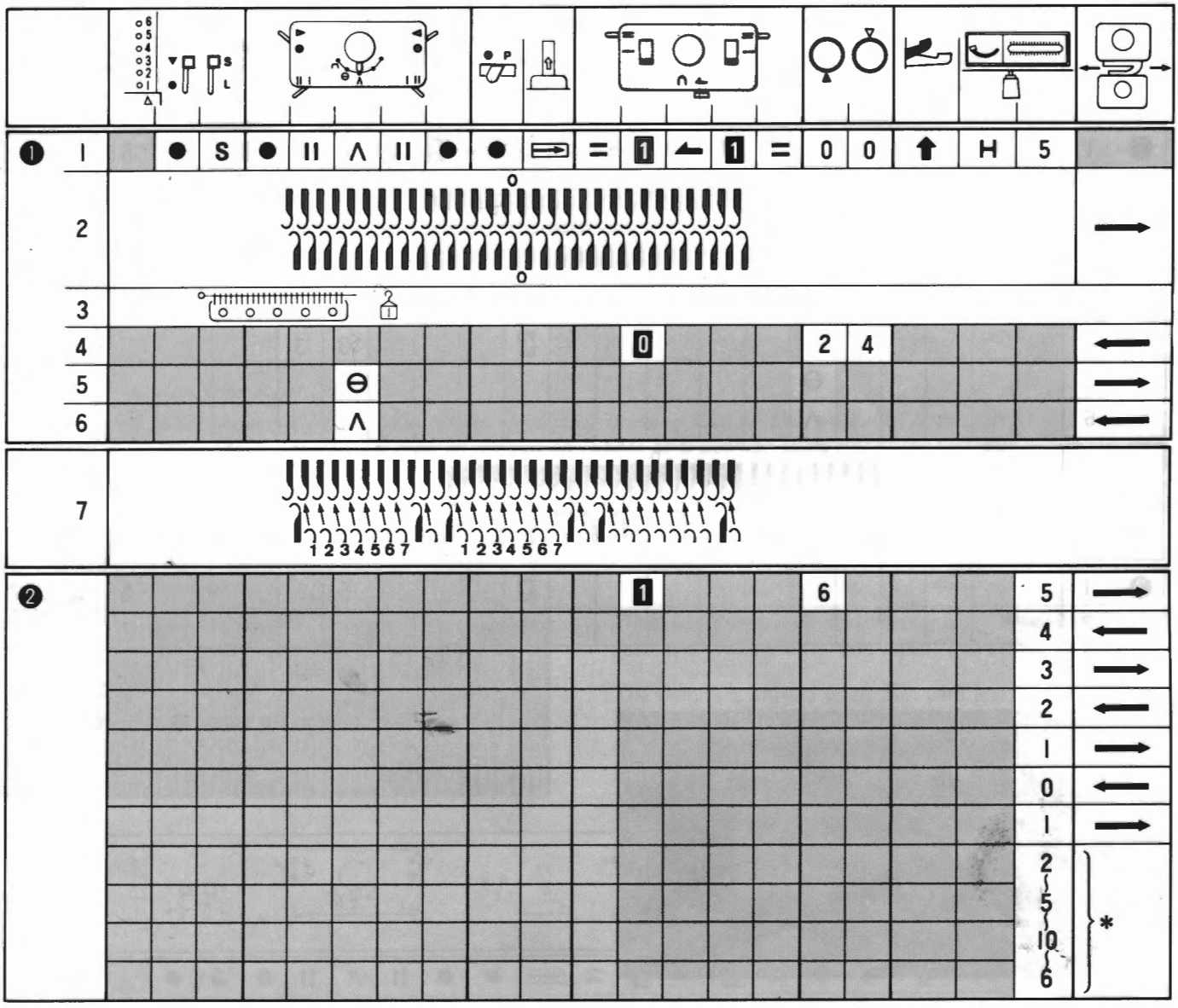

** Knit swinging Ribber by one pitch on every row to right and left alternately in appropriate intervals to make zigzag pattern. Push 1–5 end needles to D position while knitting.*

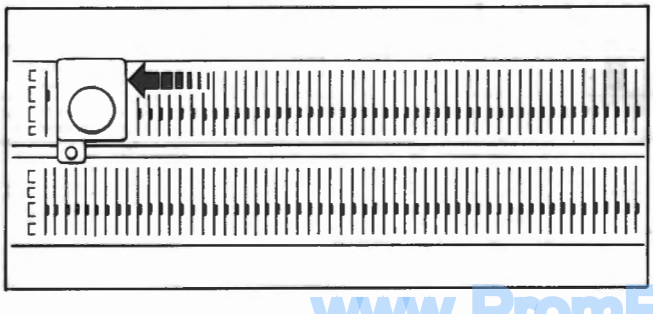

If stitches tend to float...

Knit pushing needles on the Bed having more number of needles (on Knitter) to C position using P Carriage.

www.PromElectroAvtomat.ru

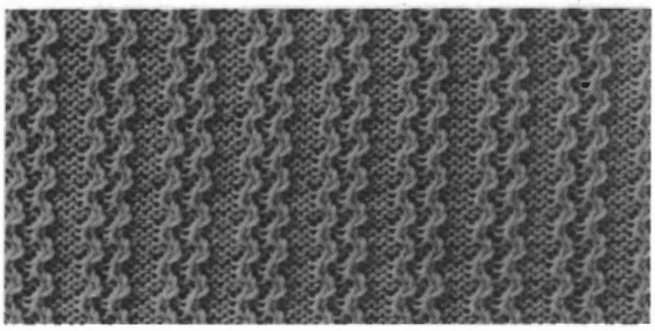

In a different needle arrangement on Ribber, different effect is added to the swing variation.

Two samples as shown below are knitted using medium yarn.

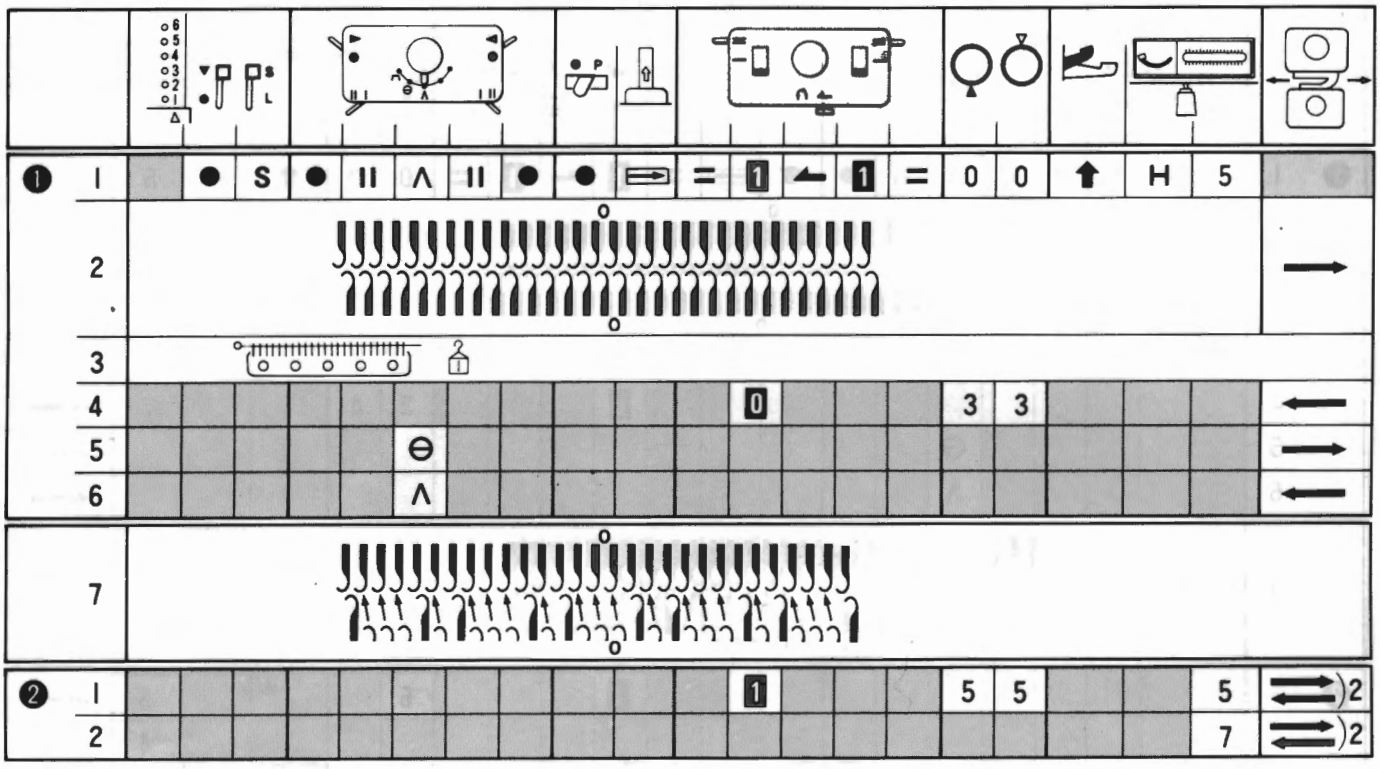

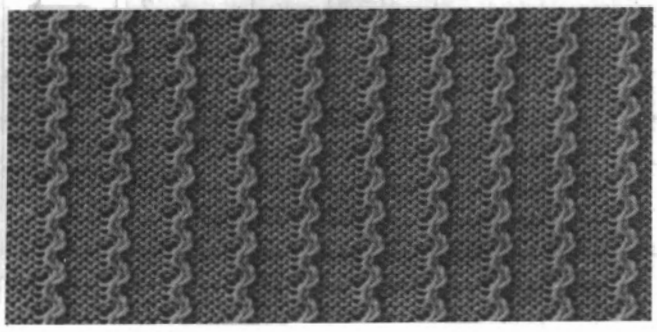

Knit in the same manner as for above ❶ – 1～❶ – 6.

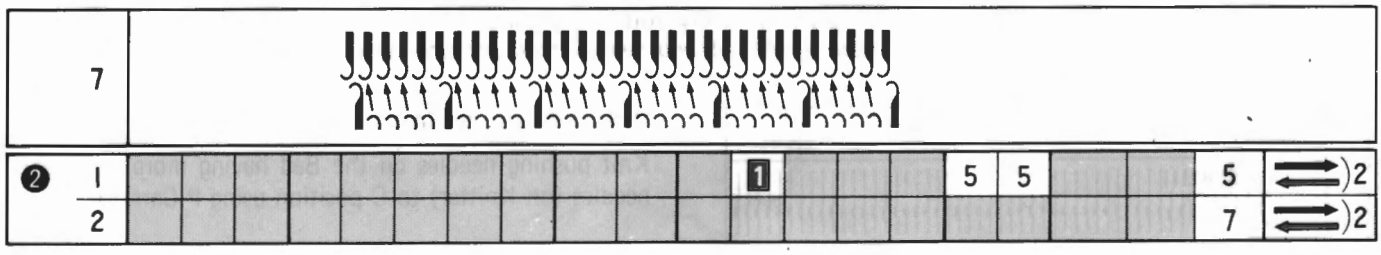

www.PromElectroAvtomat.ru

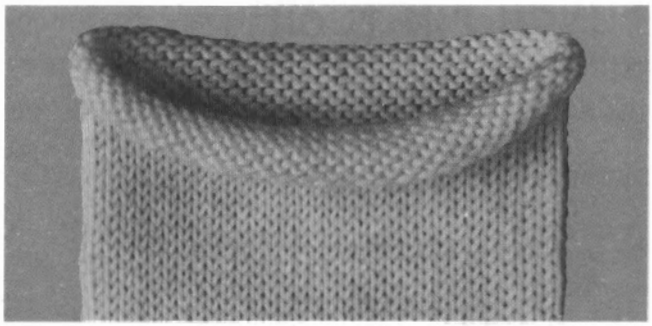

TUBULAR KNITTING

As you move Carriage back and forth, Knitter Carriage and Ribber Carriage knit alternately.

Set Ribber Stitch Dial to 2 numbers higher than Knitter Stitch Dial setting.
The sample is knitted using medium yarn.

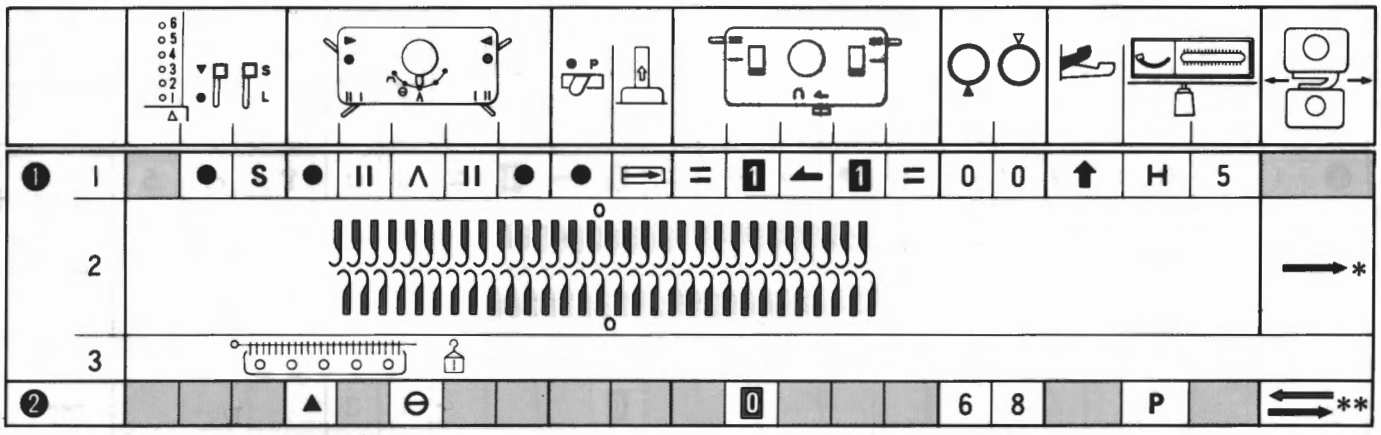

* *Knit with Ravel Cord.*

** *When moving Carriage from left to right, knit bringing four to five needles at both ends of Ribber to D position. Or push all needles on Ribber to C position using P Carriage (without P Presser).*

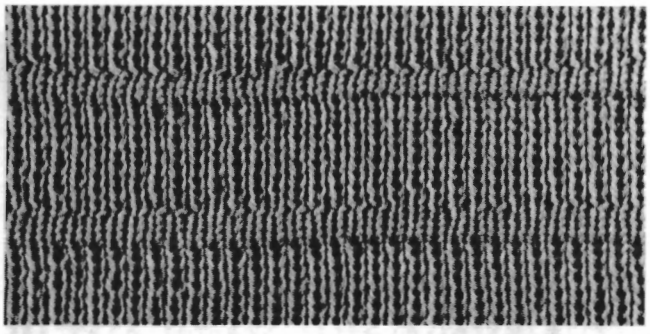

PIN TUCK

While continuing a rib knitting operation, make 3 or 4 extra rows with Ribber only, and repeat this at regular intervals.

The sample is knitted using thin yarn and by repeating the extra row knitting in the double rib operation.

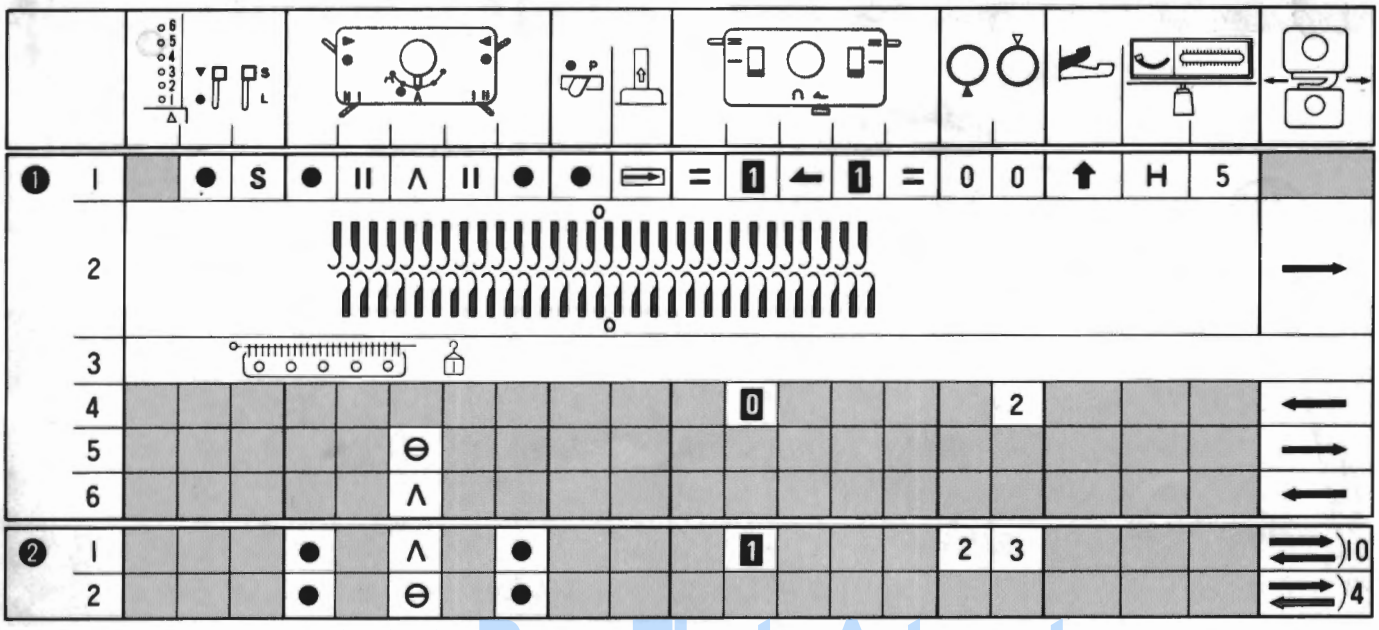

www.PromElectroAvtomat.ru

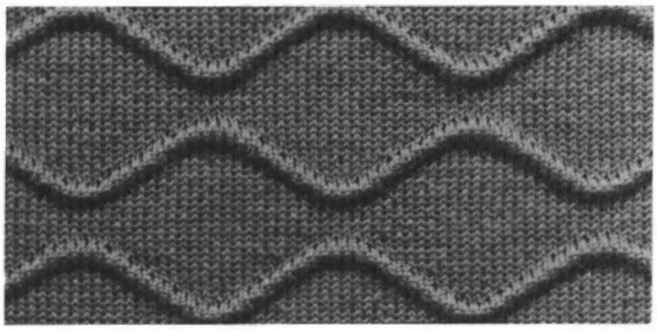

PUNCH PIN TUCK

This is a variation of pin-tuck using Punch Cards. Different from the ordinary pin-tuck knitting, curves and zigzag patterns can be knitted through brief operations.
Use Close Knit Bar referring to page 14.

The sample is knitted with Punch Card No.9 (R–2) –A using light yarn.

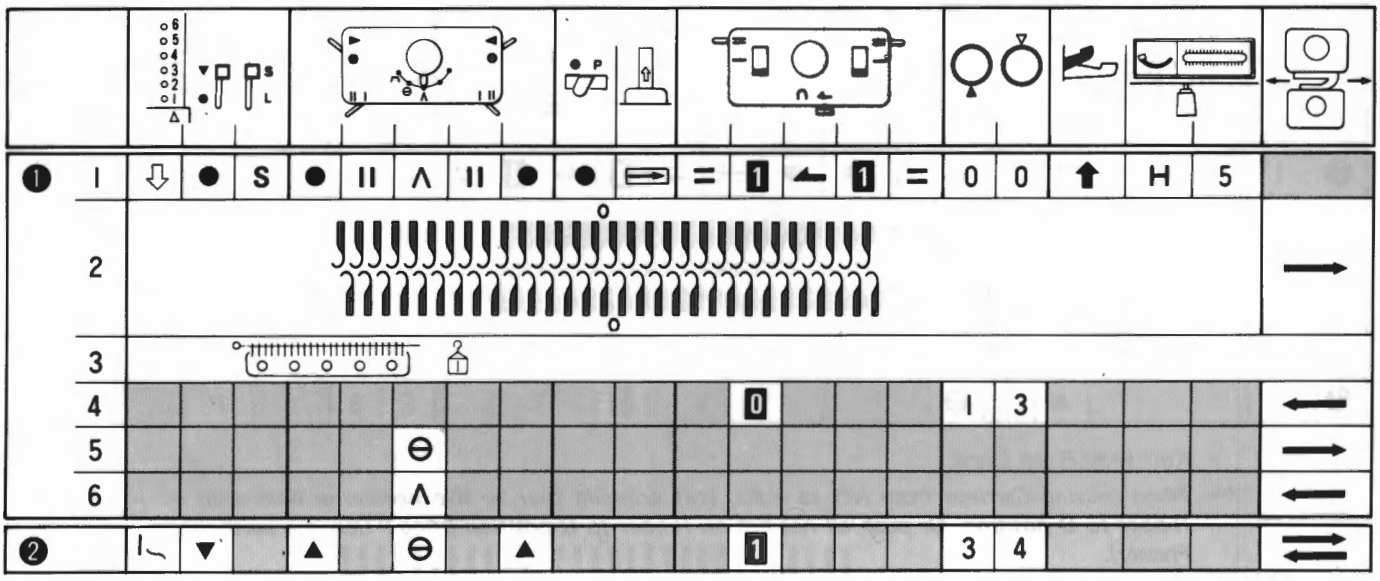

Punch Card No.10 (R–2) can be also used.

www.PromElectroAvtomat.ru

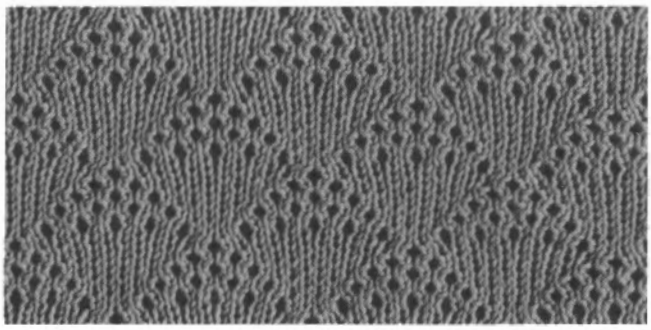

PUNCH TUCK RIB

This is a combination of tuck stitch on Knitter side, and double rib on Ribber side using a Punch Card supplied with Knitter.
Use Close Knit Bar (refer to page 14).

The sample is knitted using light yarn with Card No.10–A.

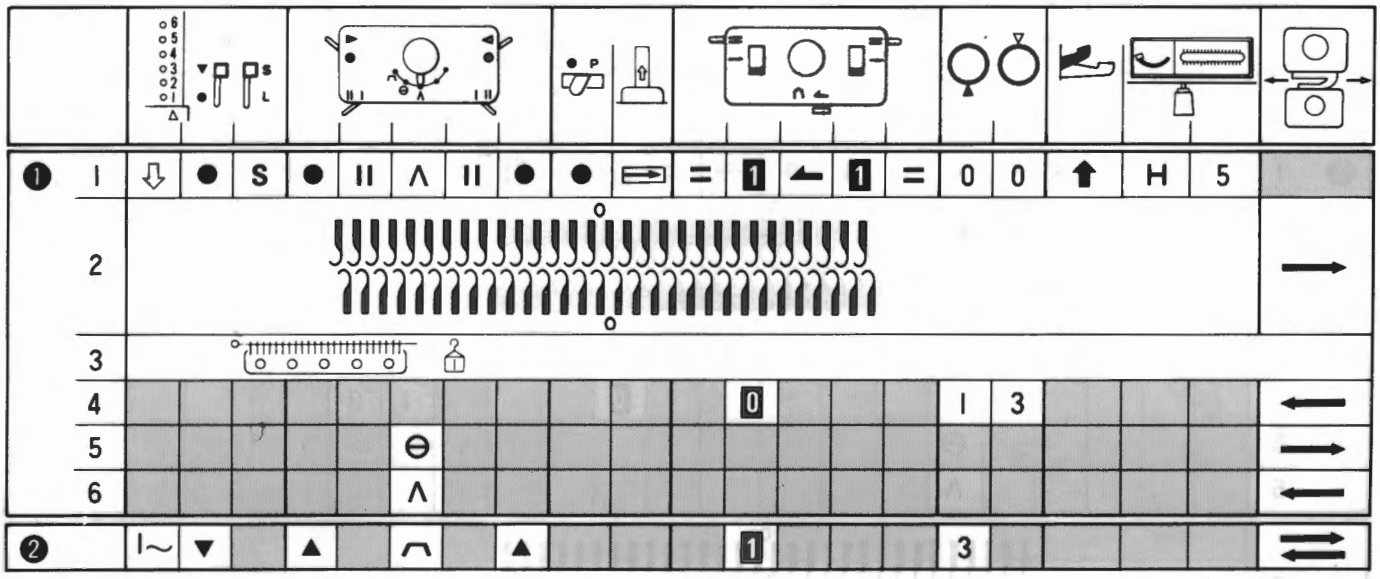

Card Nos. 2, 4, 7, 9 and 12 of the Punch Card for Knitter can be used in the same manner as above.

No.2–A

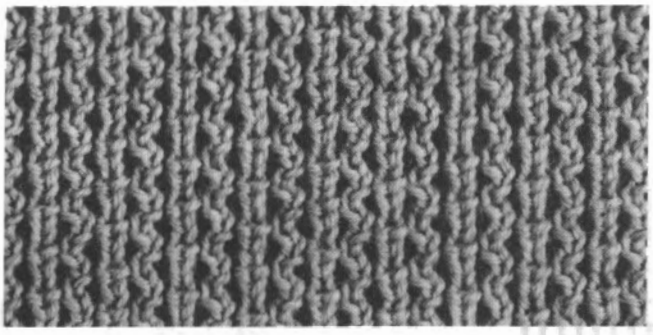

No.4–A

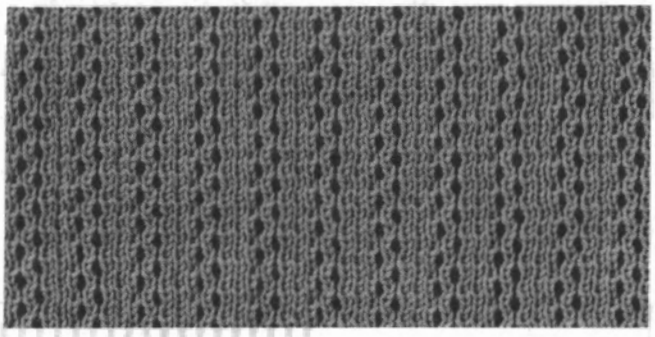

No.7–A

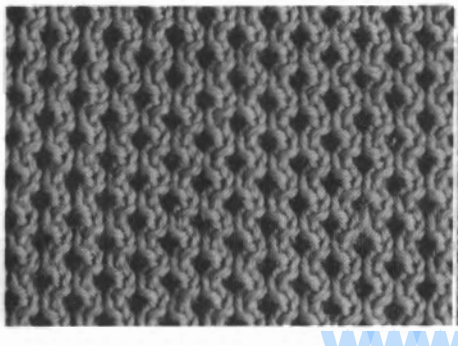

No.9–A

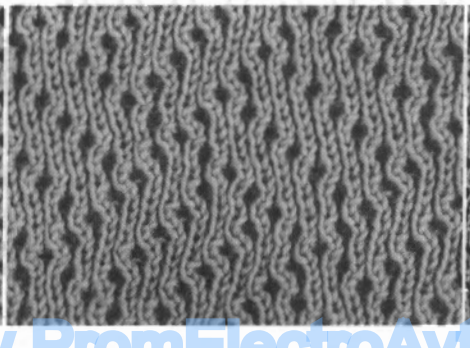

No.12–A

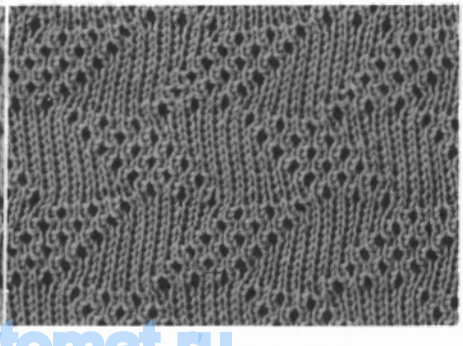

www.PromElectroAvtomat.ru

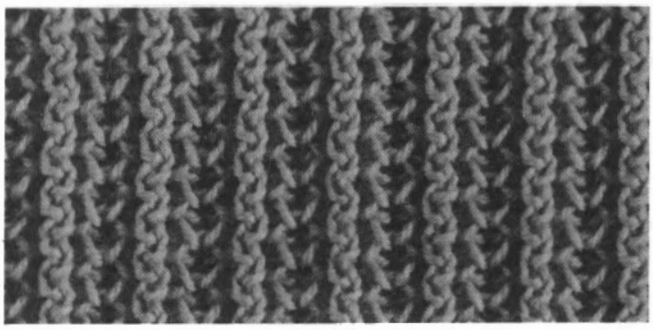

TUCK RIB STITCH

Knit in tuck stitch using a Punch Card on Knitter and arranging needles according to the pattern on Ribber.
Use Close Knit Bar (refer to page 14).

The sample is knitted with Punch Card No.7–A of the Punch Cards supplied with Knitter using light yarn.

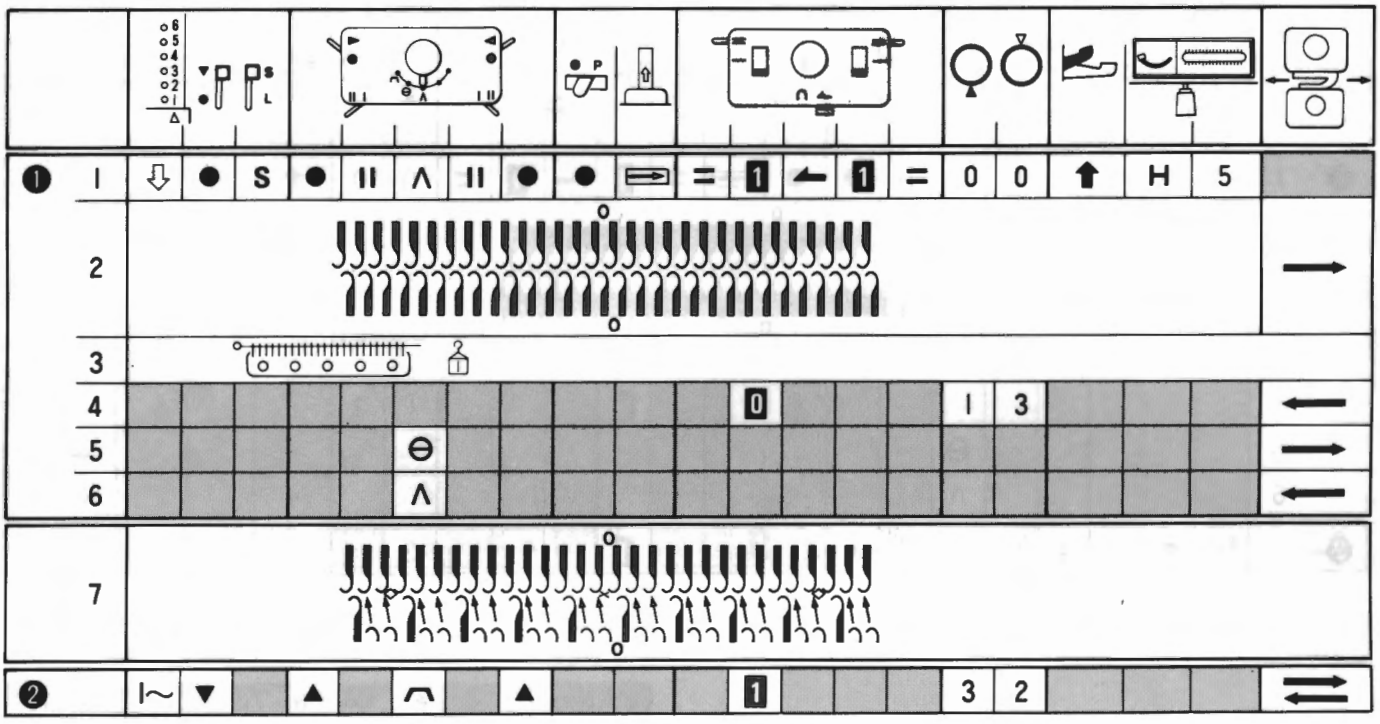

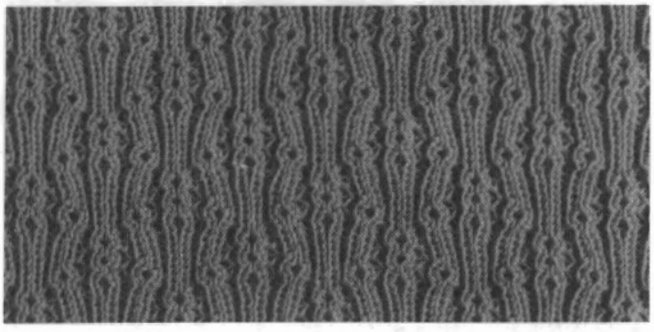

Punch Card of Knitter, suitable for tuck can be used, in different needle arrangement.

The sample is knitted with Card No.10–A using light yarn.

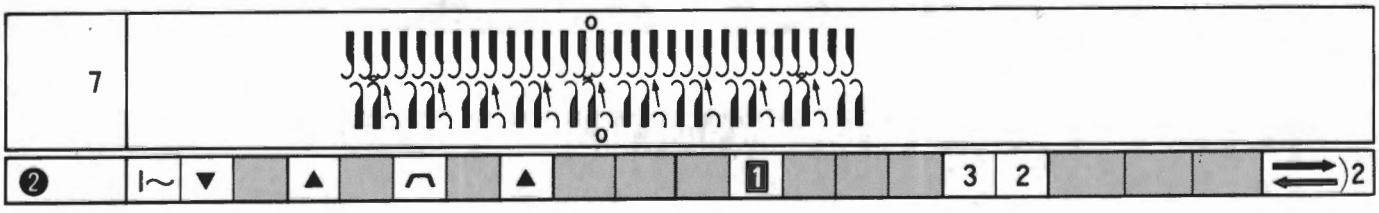

www.PromElectroAvtomat.ru

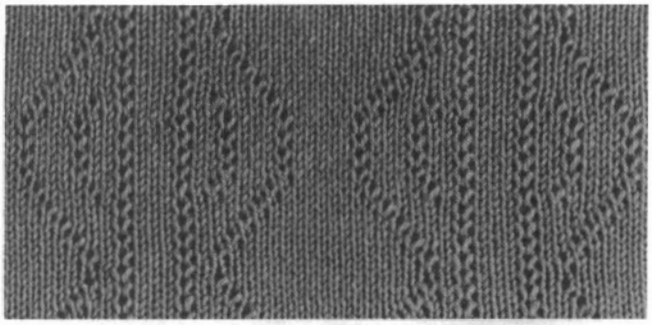

DRIVE LACE

Stockinet on Ribber side, and slip stitch on Knitter side with a Punch Card, removing Knitter stitches every second row will form lacy fabric.

Light yarn is suitable for this type of knitting.

The sample is knitted with Card No.1 (R–2)–A using light yarn.

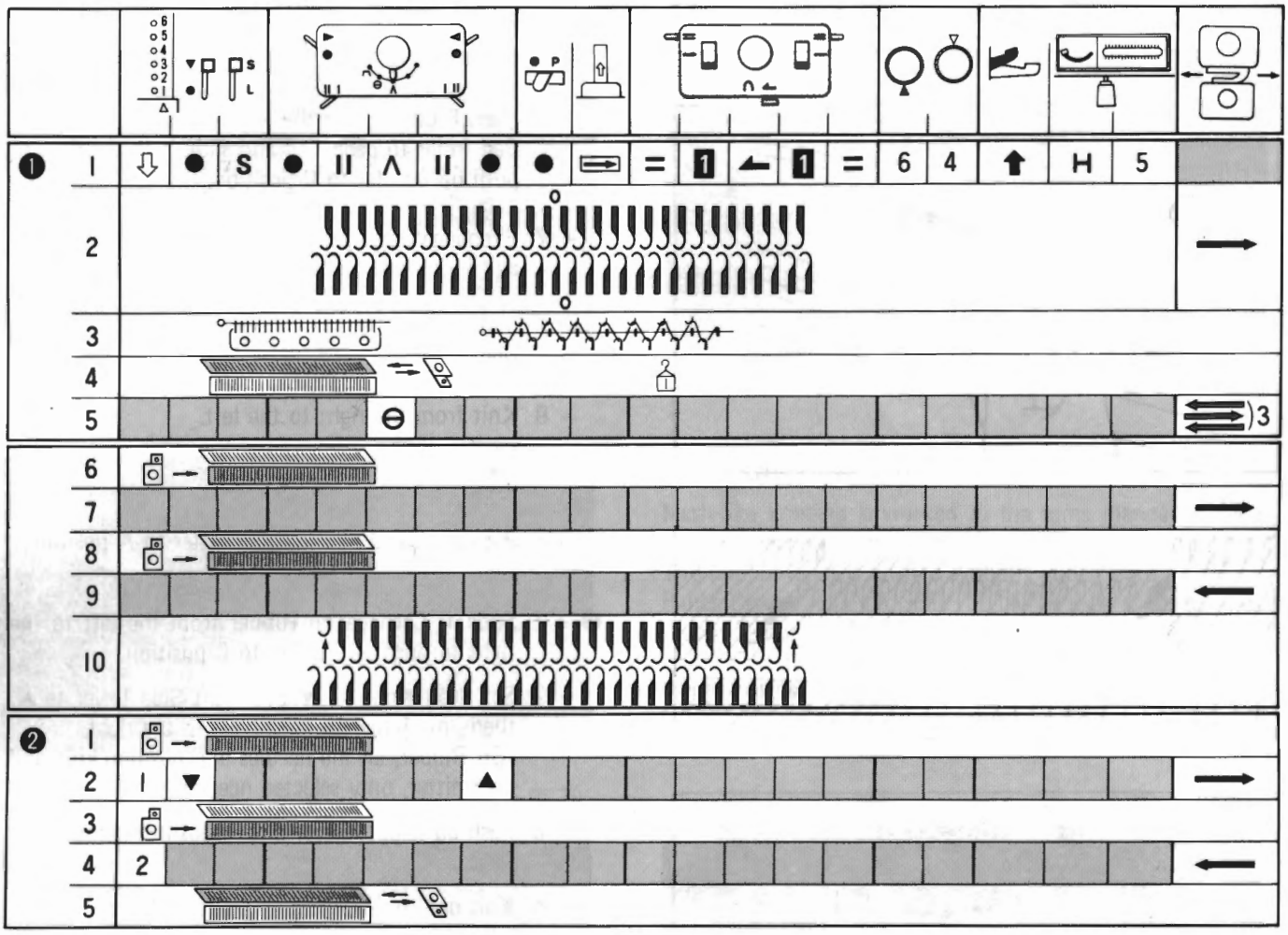

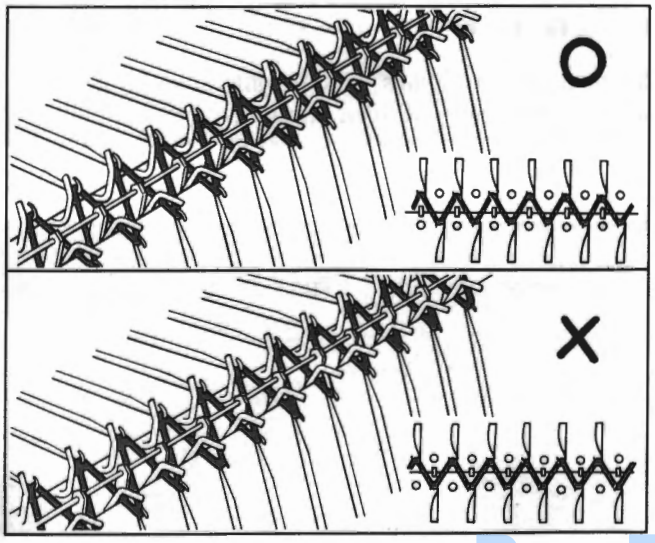

❶ – 1 Set machine controls as instructed.

Set Stitch Dials to the same as main knitting.

– 2 Arrange needles as instructed and knit from the left to the right with waste yarn.

– 3 When suspending Cast-on Comb (without Weights), insert it so that its teeth face Ribber Sinker Posts as illustrated.

www.PromElectroAvtomat.ru

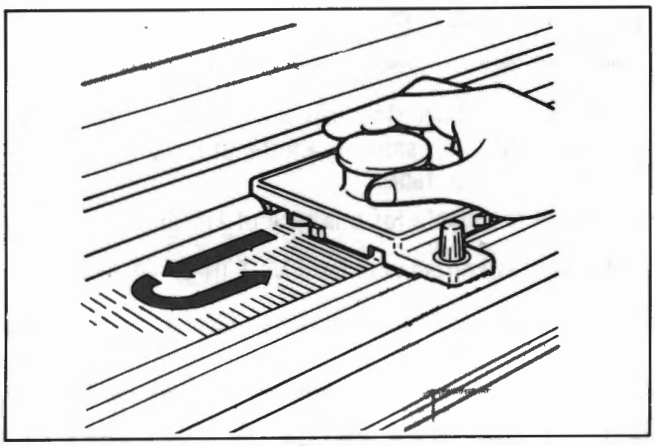

– 4 Place P Carriage (without P Presser) on the right side of knitter Needle Bed (refer to page 11). Move P Carriage to the left and back again so that stitches are removed and the needles align in B position again.

– 5 Set Cam Lever to SLIP (⊖ , S) and knit 3 rows with waste yarn.

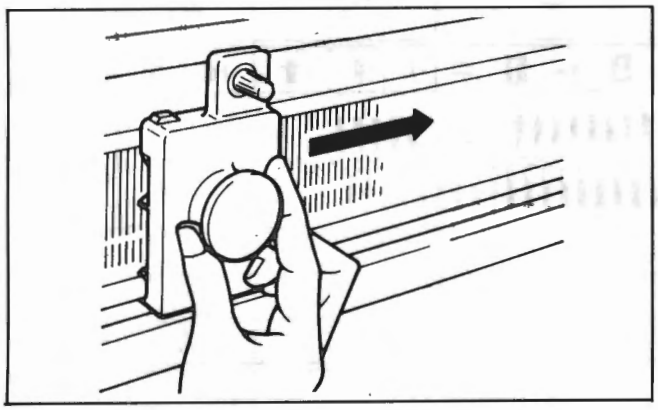

– 6 Place P Carriage on the left side of Ribber Needle Bed (refer to page 11), and slide it to the right to push up needles to C position.

– 7 Exchange waste yarn for main yarn in Yarn Feeder and knit from the left to the right.

– 8 Slide P Carriage on Ribber from the left to the right.

– 9 Knit from the right to the left.

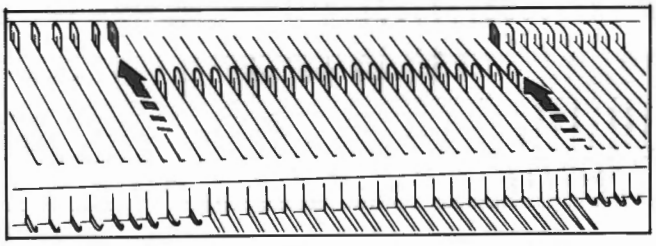

– 10 Push both end needles on Knitter to A position.

❷– 1 Slide P Carriage on Ribber from the left to the right to push up needles to C position.

– 2 Set Stop Knob to ▼ and right Side Lever to ▲, then knit 1 row from the left to the right. (On Ribber, all the needles in C position knit, and on Knitter, only selected needles knit.)

– 3 Push up Ribber needles to C position using P Carriage.

– 4 Knit one row from the right to the left.

– 5 Remove stitches on Knitter using P Carriage.

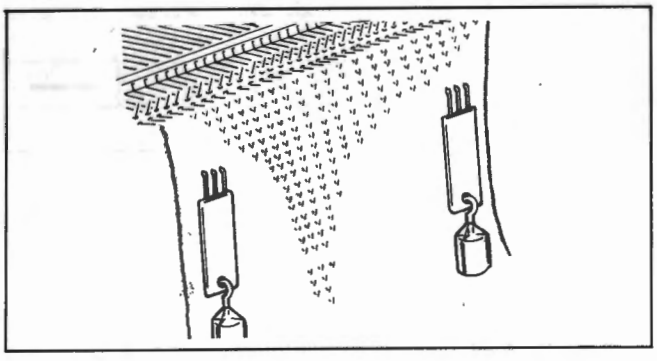

Repeat ❷–1 ~ ❷–5 for main knitting.

Suspend Hanger Combs with Weights after 10 rows and advance them every 10 rows upwards.

No. 2 (R–2)

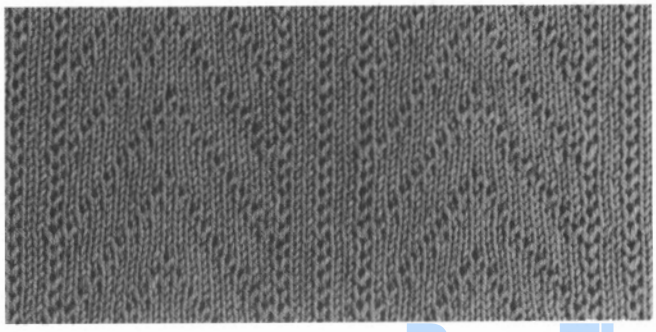

More samples with different Punch Cards are shown below.

www.PromElectroAvtomat.ru

No. 3 (R–2)

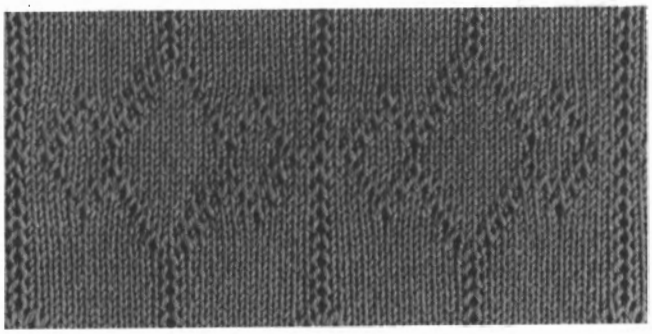

No. 4 (R–2)

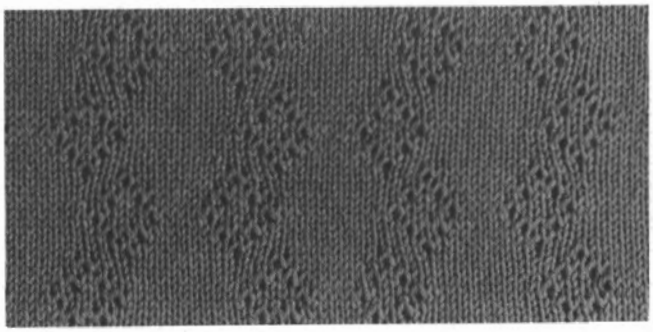

No. 5 (R–2)

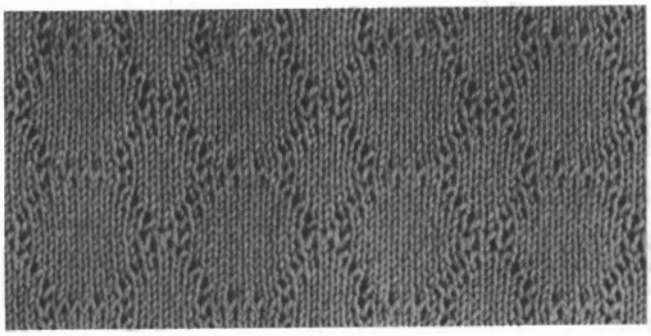

No. 6 (R–2)

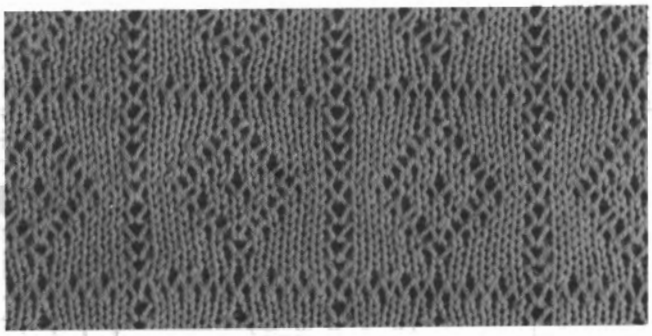

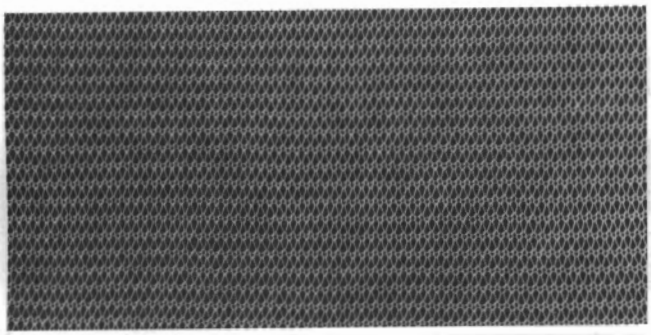

MESH KNITTING

Mesh-like knitting is worked in the same manner as done for drive lace knitting using thin yarn.
The sample (left) is knitted without Punch Card.
Punch Cards suitable for Pile Rib can be used as the samples shown below.

When ironing, slide the iron in vertical direction on the fabric.

No. 7 (R–2)

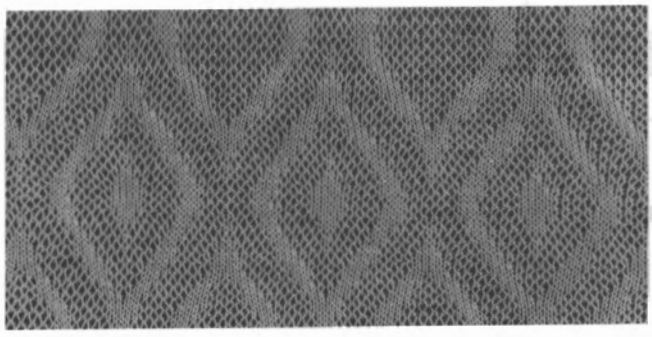

No. 8 (R–2)

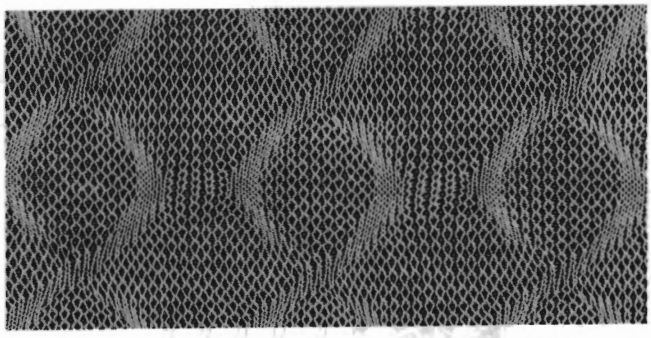

No. 9 (R–2)

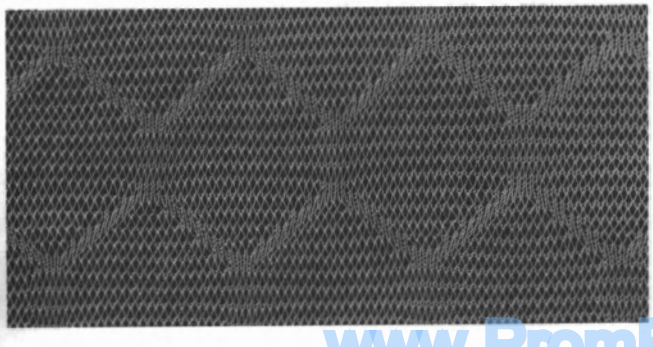

No. 10 (R–2)

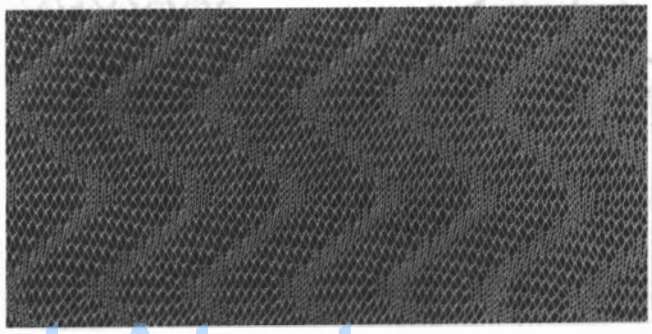

www.PromElectroAvtomat.ru

PILE RIB

The stitches in this knitting are formed using both ground yarn and pile yarn.
Knit every 2 rows using pile yarn only on Knitter and every row using both yarns on Ribber removing stitches.

The sample is knitted with Card No.7 (R–2)-A using wooly-nylon yarn (ground yarn) and light yarn (pile yarn).

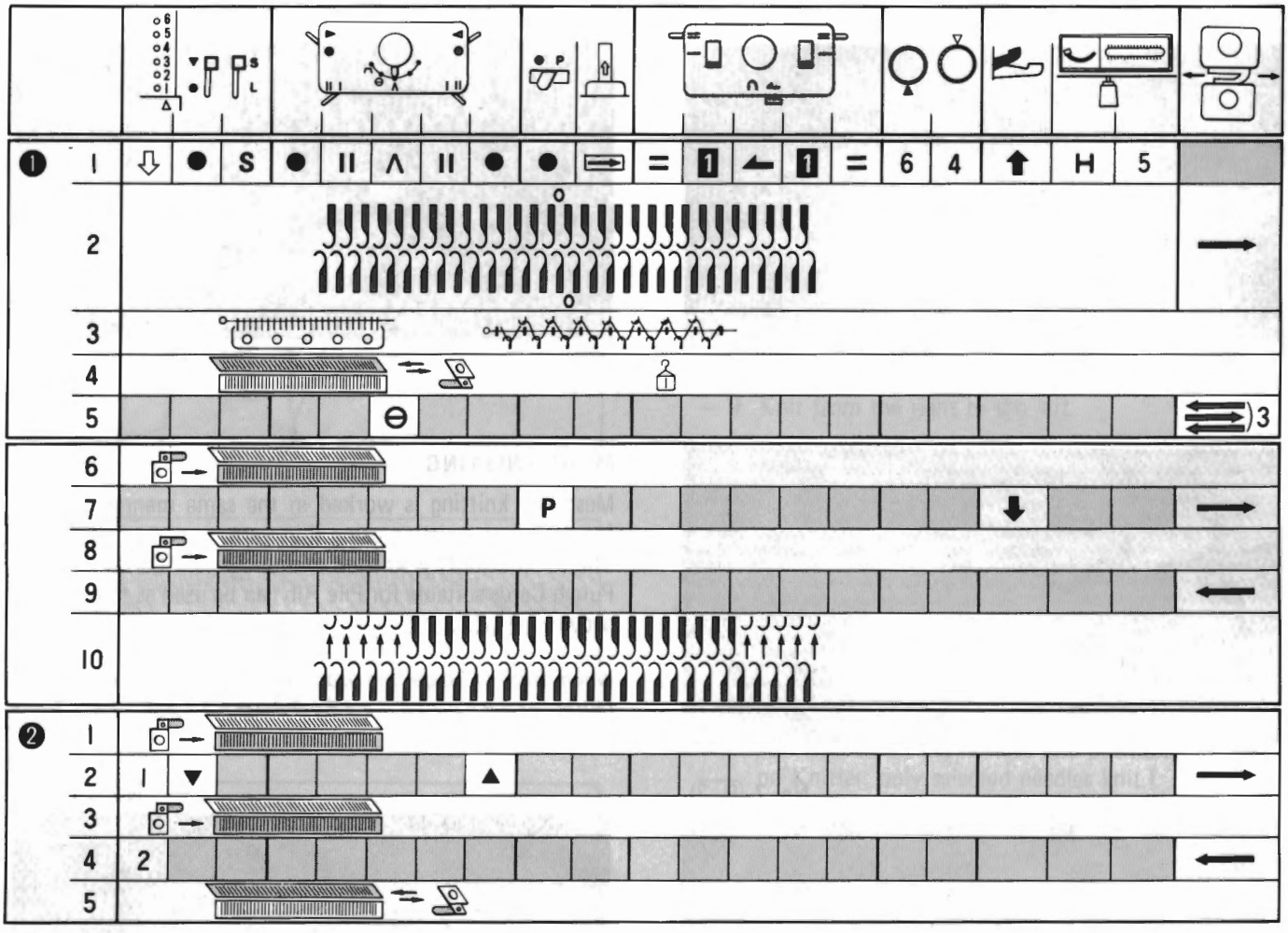

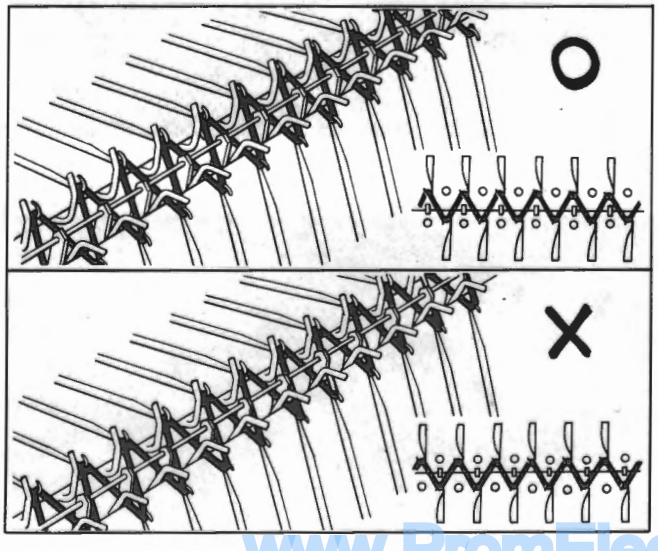

❶ – 1 Set machine controls as instructed.

Set Stitch Dial to the same number as for main knitting.

– 2 Arrange needles as instructed and knit from the left to the right with waste yarn.

– 3 When suspending Cast-on Comb, insert it so that its teeth face Ribber Sinker Posts as illustrated.

www.PromElectroAvtomat.ru

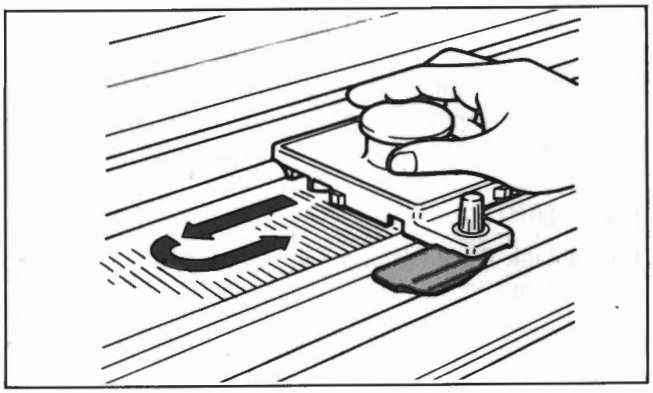

❶ – 4 Place P Carriage with P Presser attached on the right side of Knitter Needle Bed (refer to page 11). Move P Carriage to the left and back again so that stitches on knitter are removed and the needles are aligned in B position again.

– 5 Set Cam Lever to SLIP (⊖ , S) and knit 3 rows with waste yarn.

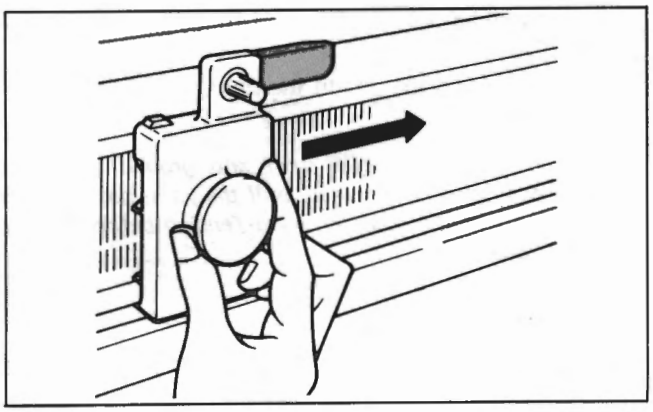

– 6 Place P Carriage on the left side of Ribber Needle Bed (refer to page 11), and slide it to the right to push up needles to C position.

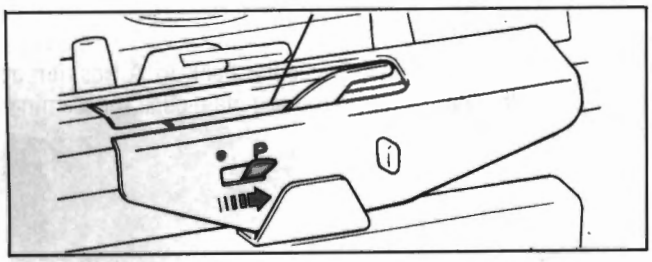

– 7 Exchange waste yarn for pile yarn in main Yarn Feeder.

Set Auxiliary Yarn Feeder Lever to P (right) position, and thread ground yarn into Auxiliary Yarn Feeder following the manner below.

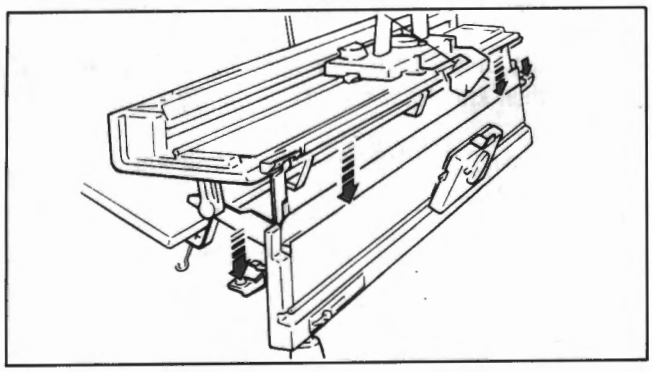

(1) Lower Ribber Needle Bed to the middle position by depressing Drop Lever (red mark) once.

(2) Thread ground yarn through Auto-Tension.

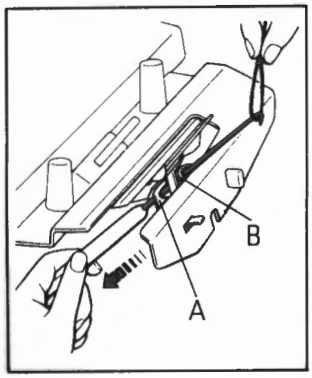

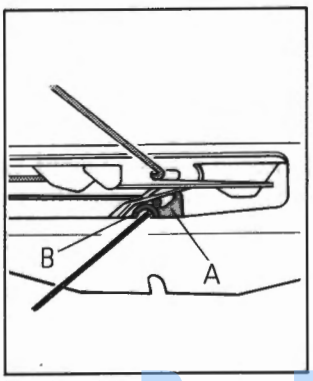

(3) Make a loop on yarn end and hold it above Auxiliary Yarn Feeder.

(4) Insert Hook Tool from underneath through Auxiliary Yarn Feeder "A" and Yarn Guide "B", then catch yarn loop.

(5) Pull Hook Tool downwards threading yarn through Yarn Guide and Auxiliary Yarn Feeder.

www.PromElectroAvtomat.ru

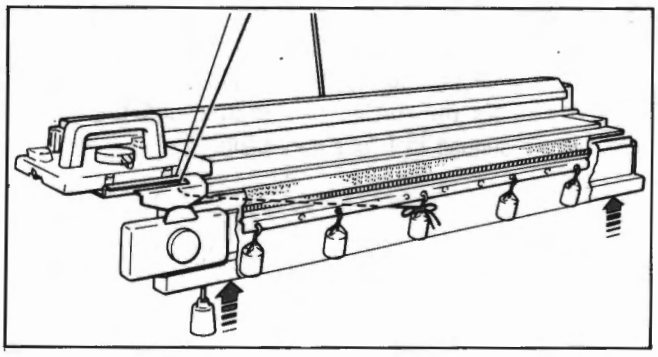

(6) Tie yarn end to hook of Weight on Cast-on Comb.

(7) Push up Ribber Needle Bed to its top position. Ensure Ribber needles are correctly lined up in B position.

IMPORTANT:

Ensure Link Pin on Ribber Carriage is joined properly to Ribber Arm.

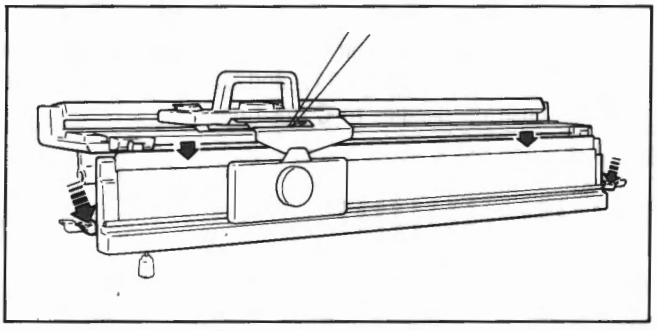

Depress both Pile Levers (marked blue) to widen space between Knitter and Ribber Needle Bed.

Knit from the left to the right.

If the yarns, pile yarn and ground yarn, get entangled or loosened, pull the yarns back to yarn balls at the back of Auto-Tension before moving Carriage.

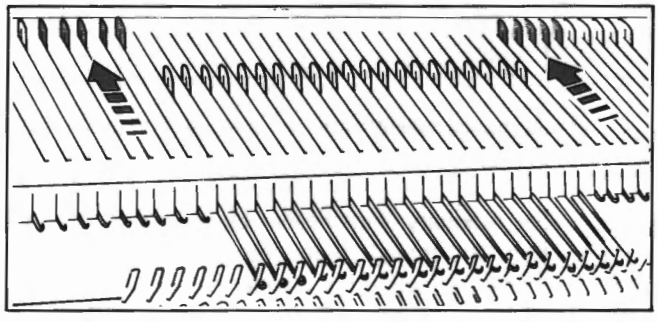

– 8 Slide P Carriage on Ribber from the left to the right.

– 9 Knit from the right to the left.

– 10 On Knitter, push 5 needles back to A position at both sides of fabric to have plain edge for seaming.

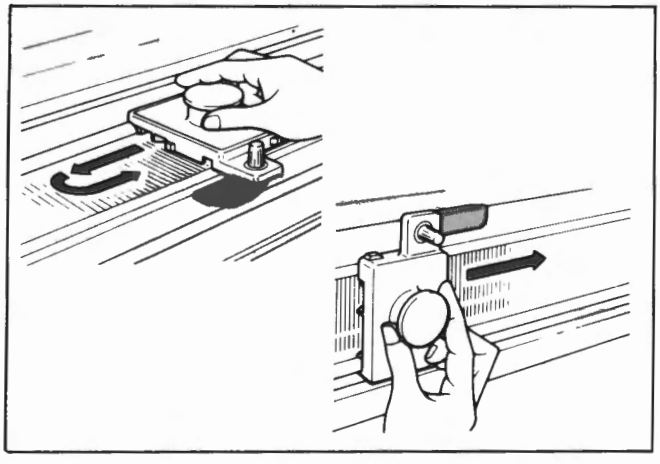

❷ – 1 Slide P Carriage on Ribber from the left to the right to push up needles to C position.

– 2 Set Stop Knob to ▼ and right Side Lever to ▲, then knit from the left to the right.

– 3 Slide P Carriage on Ribber from the left to the right.

– 4 Knit 1 row from the right to the left.

– 5 Remove stitches on Knitter using P Carriage.

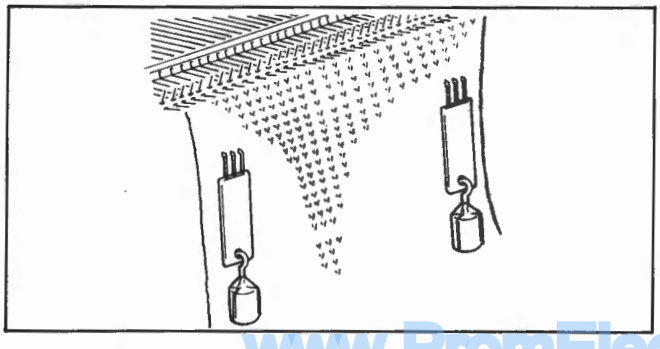

Repeat ❷ – 1～❷ – 5 for main knitting.

Suspend Hanger Combs with Weights after 10 rows and advance them every 10 rows upwards.

www.PromElectroAvtomat.ru

No. 8 (R-2) –A

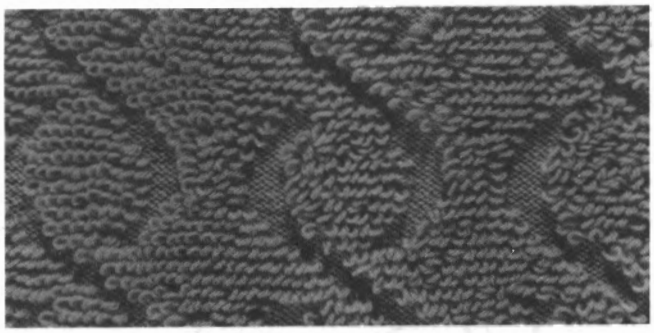

You can use Punch Cards below in PILE RIB.

No. 9 (R-2) –A

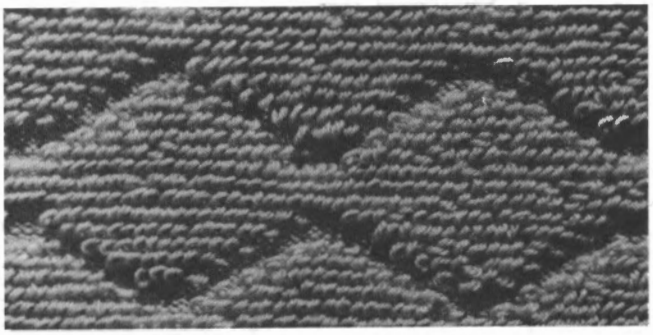

No. 10 (R-2) –A

The photograph opposite shows the fabric of Pile Rib knitted without using Punch Card.

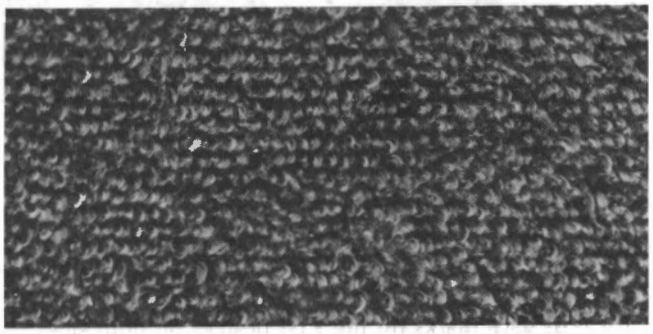

FINISHED FABRIC CAN BE USED WITH CLOSED PILE LOOPS OR CUT LOOPS.

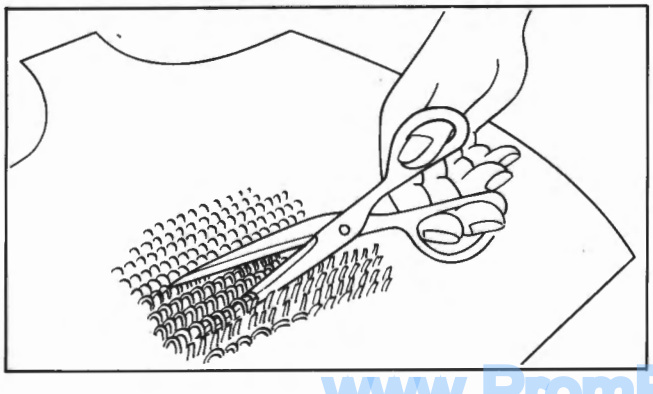

To cut loops, spread fabric on a flat surface.

Insert one scissor blade into centre of loops and cut open.

Give steam to the surface of the fabric.

DO NOT PRESS.

www.PromElectroAvtomat.ru

TAKING A TENSION GAUGE

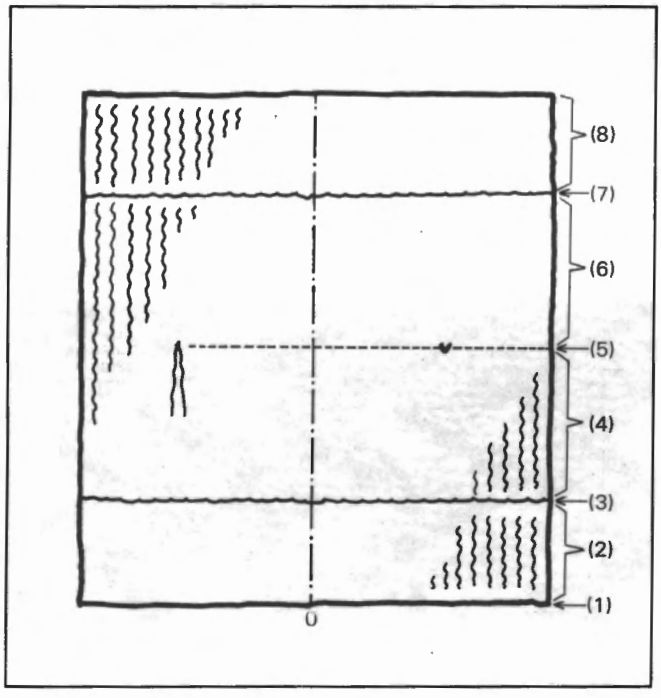

Tension gauge

When Ribber is used for knitting a garment, stitches are knitted on both Knitter and Ribber, and in many cases, not all the needles within the range of fabric are used.

Therefore, the following instructions should be noted when knitting tension swatch and also in taking a tension gauge.

To knit a tension swatch

Before knitting tension swatch, try knitting till you obtain suitable Stitch Dial number for the selected yarn.

Then knit the swatch in the manner instructed below.

(1) Regardless of stitch type, always arrange needles within range of 35th needles on both sides of centre(0) on both beds.

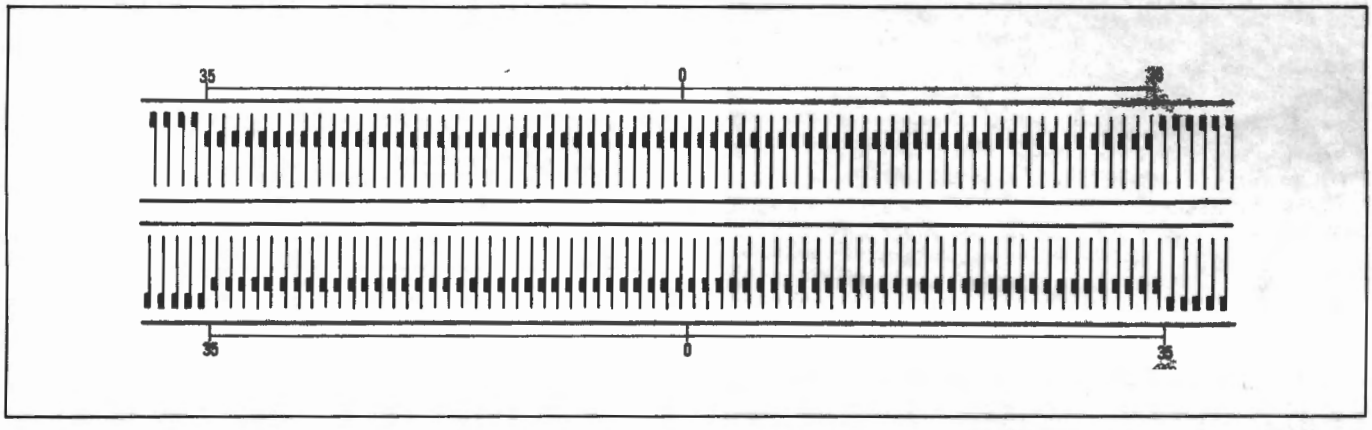

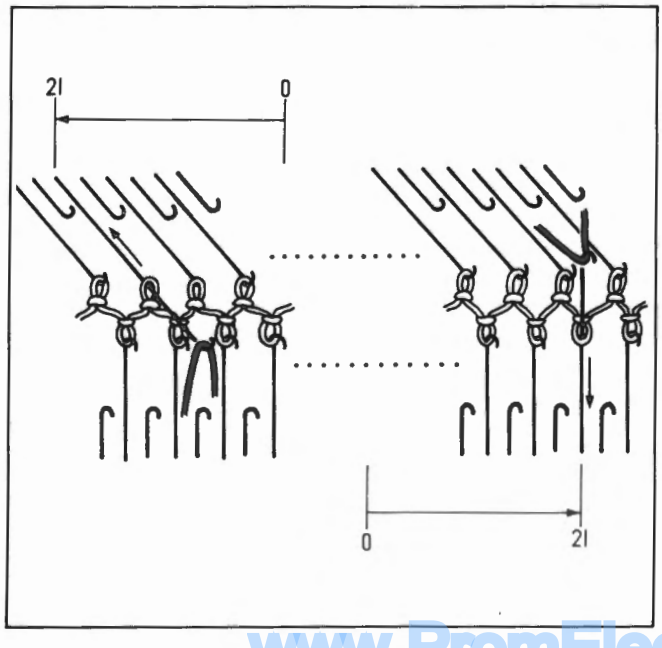

(2) Cast on and knit 20 rows.

(3) With a contrast yarn, knit 2 rows.

(4) With main yarn, knit 30 rows.

(5) Put yarn marks on the 21st needles on both sides of centre(0) on either Knitter or Ribber.

(6) Knit 30 rows continuously.

(7) With a contrast yarn, knit 2 rows.

(8) With main yarn, knit 20 rows.

(9) Remove the swatch from the machine.

www.PromElectroAvtomat.ru

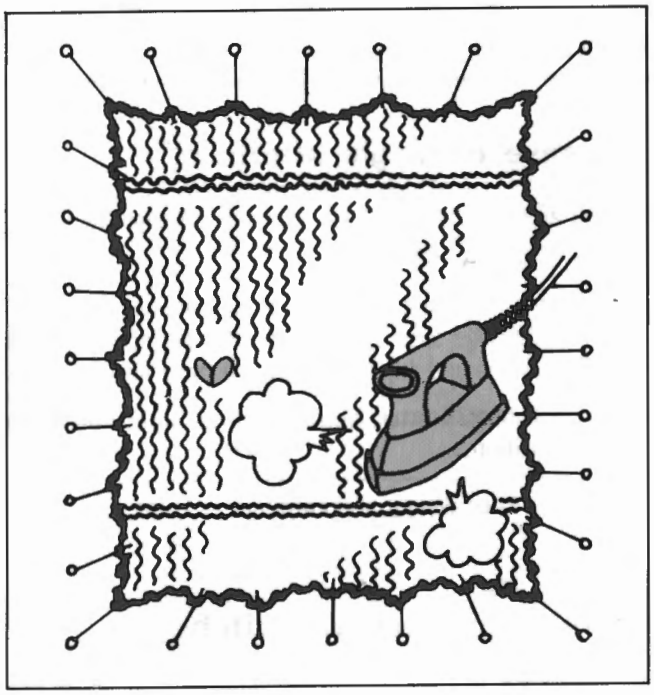

Leave the swatch for several hours so that it can relax, then stretch it as much as if it is worn, then pin it down.

Hold a steam iron close to the swatch and distribute its steam evenly over the swatch.

Allow the swatch to dry, take a tension gauge over it as it is pinned down.

Measure the number of stitches and rows using Gauge Scale between yarn marks.

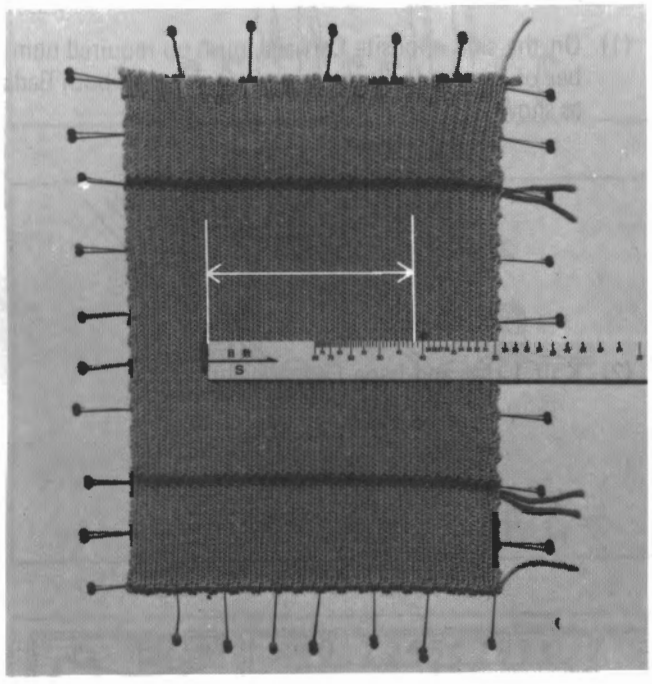

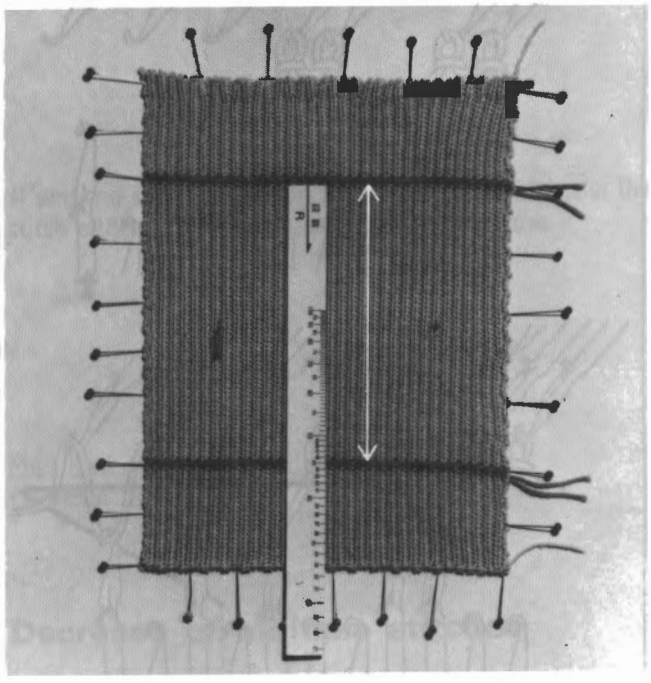

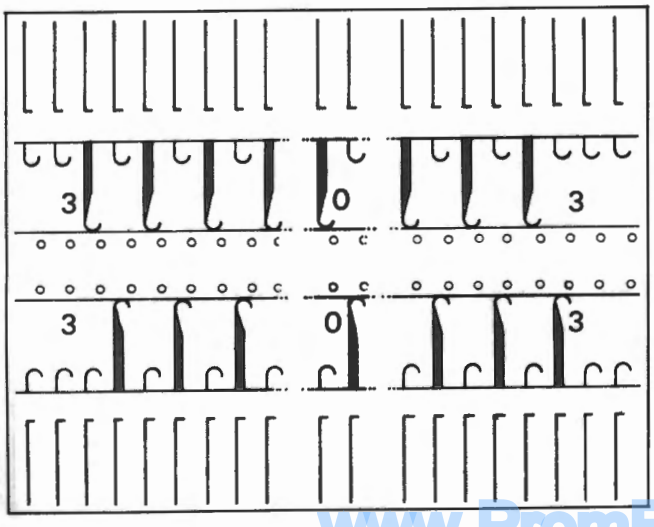

When knitting a garment based on the tension gauge taken in the foregoing procedure, arrange needles for the width of the total number of needles, including non-working needles.

Example: If 60 stitches are counted in the tension gauge for the swatch of K1. P1. rib, arrange needles for 1 x 1 within the total of 60 needles.

www.PromElectroAvtomat.ru

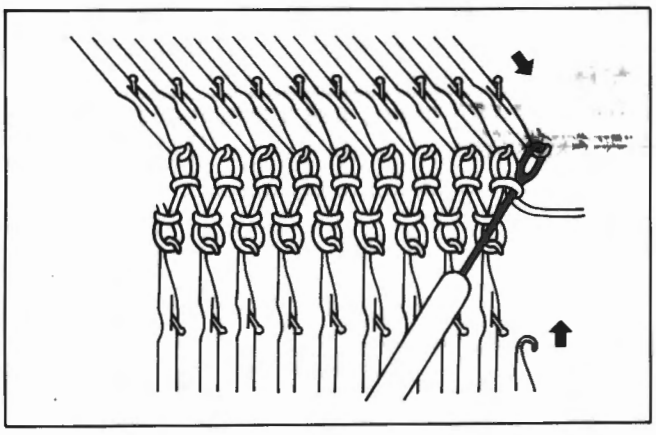

Increase of single stitch

In case of K1. P1. and K2. P2. rib, refer to page 20.

In case of double rib:

(1) Push an adjacent Knitter/Ribber needle at A position on Carriage side to B position. Pick loop of stitch below the end stitch and place it onto needle.

(2) On Ribber/Knitter, push needle in A position up to B position.

(3) Hang Edge Weight and continue to knit.

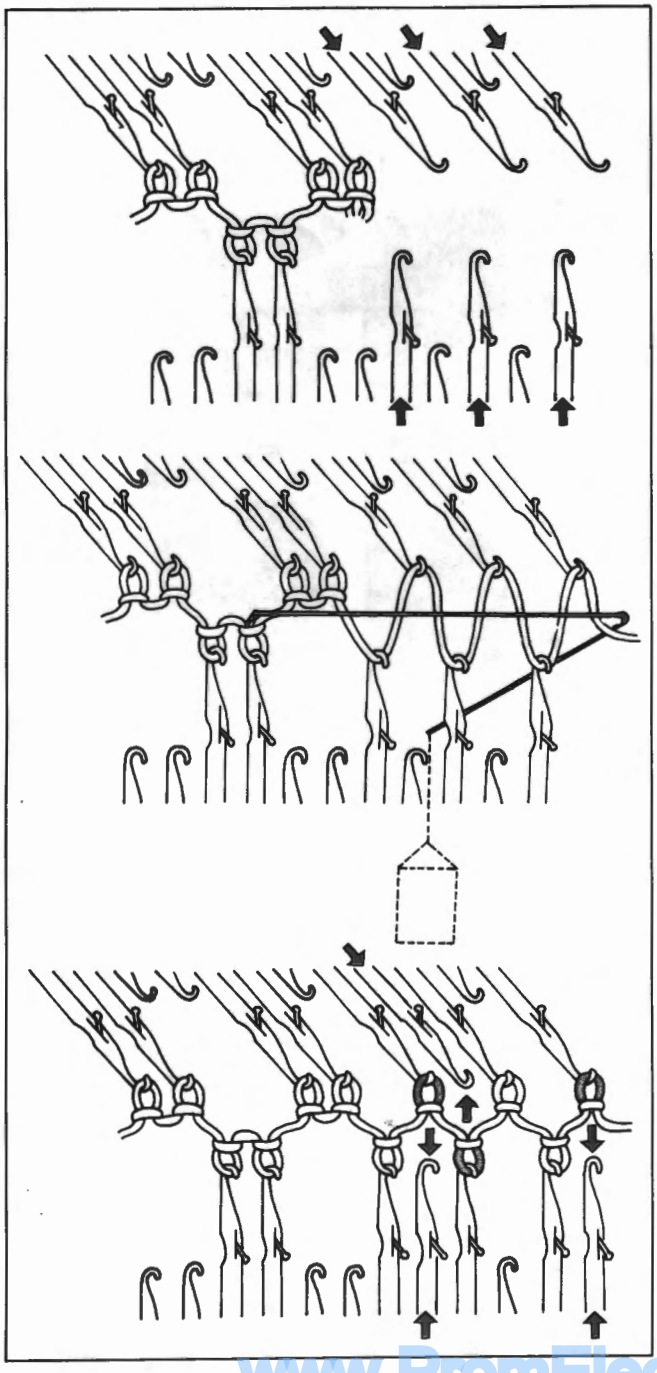

Increase of multiple stitches

In case of K1. P1. and double rib, refer to page 20.

In case of K2. P2. rib:

(1) On the side opposite Carriage, push up required number of needles for increase to B position on both Beds as shown.

(2) Knit 1 row and hang Edge Weight.

(3) Knit 1 row.
Rearrange needles by transferring stitches as arrow-marked.

(4) Push back empty needles to A position.
Continue to knit.

www.PromElectroAvtomat.ru

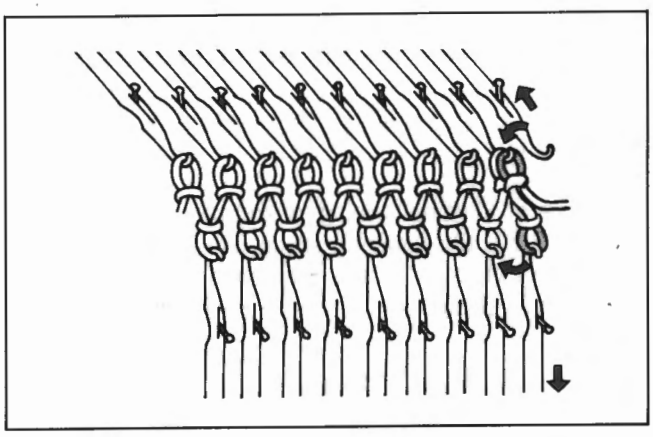

Decrease of single stitch

In case of K1. P1. rib, refer to page 21.

In case of double rib:

(1) Transfer end stitches on both Knitter and Ribber onto their adjacent inside needles at the same time.

(2) Push back empty needles to A position. Continue to knit.

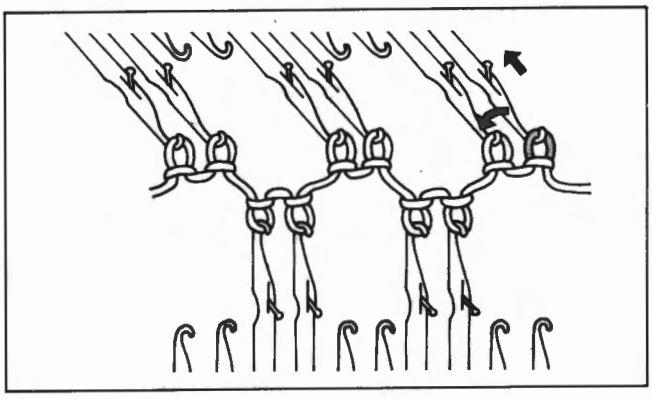

In case of K2. P2. rib:

If two end stitches are aligned on Knitter or Ribber, transfer the first end stitch to its adjacent needle.

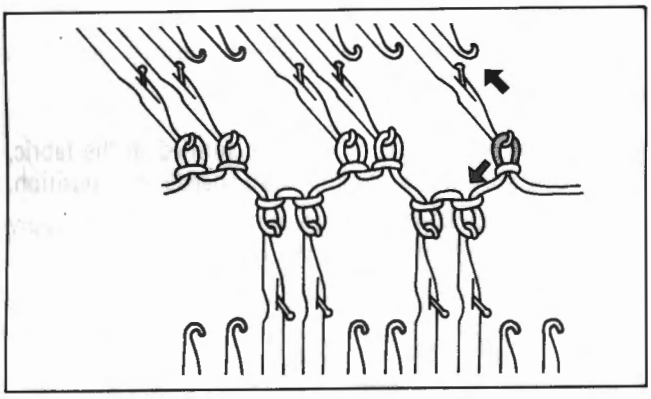

If one end stitch is only on Knitter or Ribber, transfer the stitch either from Ribber to Knitter or vice versa.

Push back the empty needle to D position. Continue to knit.

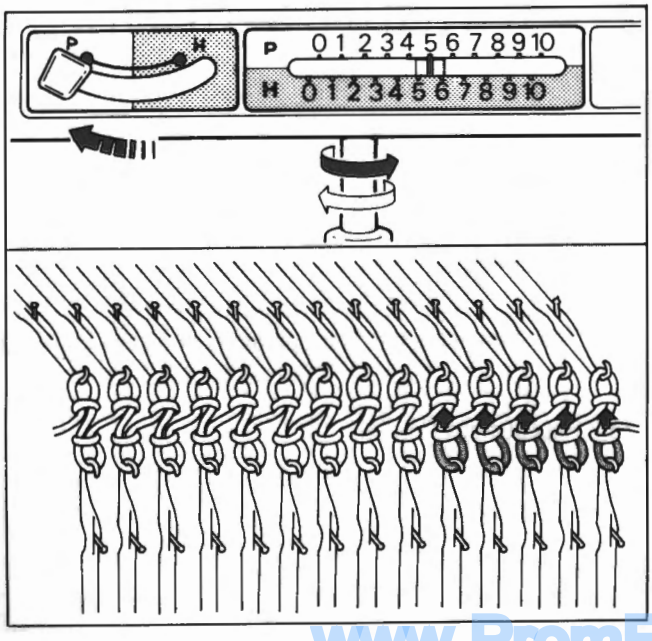

Decrease of multiple stitches

In case of K1. P1. and K2. P2. rib, refer to page 21.

In case of double rib:

(1) Before transferring stitches, set Half-Pitch Lever to P.

(2) After decreasing stitches in the same manner as for K1.P1. rib (refer to page 21), re-set Half-Pitch Lever to H.

www.PromElectroAvtomat.ru

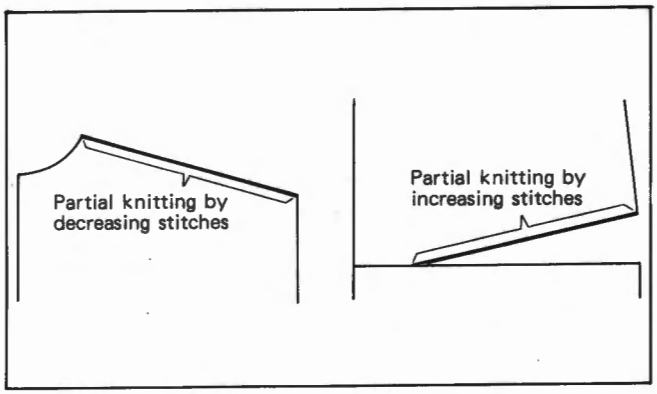

***PARTIAL KNITTING** is a practical method for shaping a gentle slope such as a shoulder, back of slacks and so on.*

Note:

In case of knitting pushing up end needle to D position like K3.P3. rib, variation swing, pile knitting and drive lace knitting, etc., push up needle to C position since needles in D position can not knit in partial knitting.

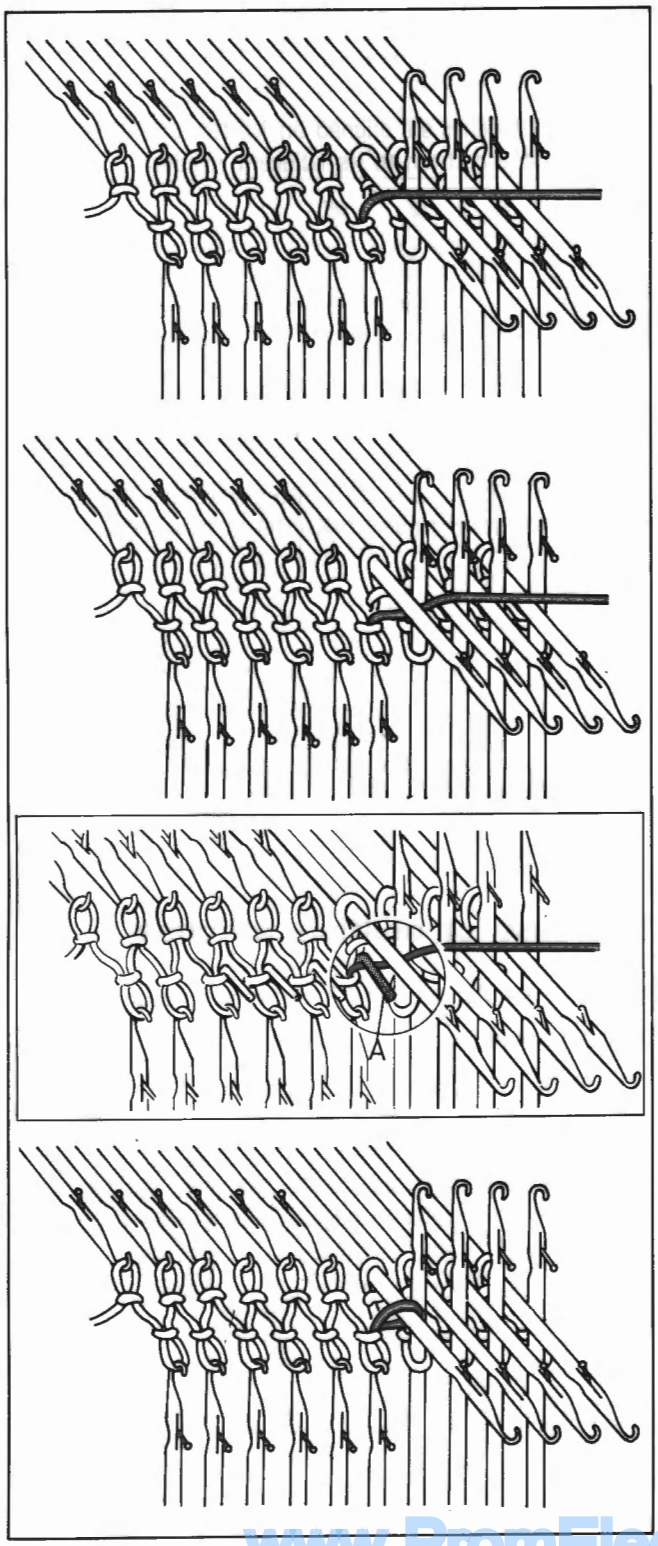

Partial knitting without involving "swing"

This method applies to double rib, K1.P1. rib, K2.P2. rib, K3.P3. rib (wide ribbing), punch tuck rib, pintuck, English and double English rib, etc.

Partial knitting by decreasing stitches.

Set Russel Levers on Knitter and Ribber Carriage to **I** and **—** positions respectively.

(1) On the side opposite Carriage, push up needles to be decreased to D position.

(2) Knit one row, then yarn will be laid over needles in D position.

(3) To prevent a hole from being formed in the fabric, bring yarn under the first inside needle in D position.
(If partial knitting is required on both sides, apply step (1) before knitting the next row.)

Be sure that yarn is not caught in Sinker Post "A".

(4) Knit one row.

This completes the first operation of partial knitting.

(5) Repeat steps (1)—(4).

www.PromElectroAvtomat.ru

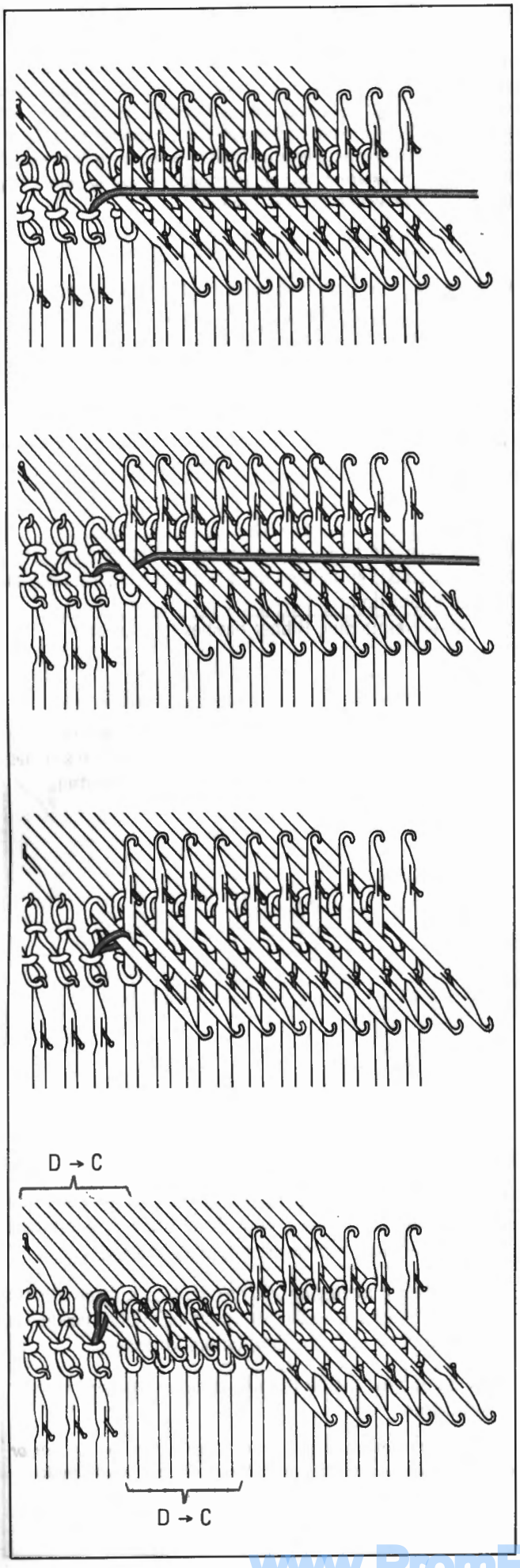

Partial knitting by increasing stitches.

Set Russel Levers on Knitter and Ribber Carriages to I and — positions respectively.

(1) On the side opposite Carriage, push up needles for the width to be shaped by partial knitting to D position.

(2) Knit one row, then yarn will be laid over needles in D position.

(3) To prevent a hole from being formed in the fabric, bring yarn under the first inside needle in D position.

(If partial knitting is required on both sides, apply step (1) before knitting the next row.)

(4) Knit one row.

(5) On the side opposite Carriage, push needles in D position to be increased back to C position, and knit one row.

Note: When knitting in a stitch pattern, stitches in D position must be replaced into needle hook, using Transfer Tool.

(6) Repeat steps (3)–(5).

www.PromElectroAvtomat.ru

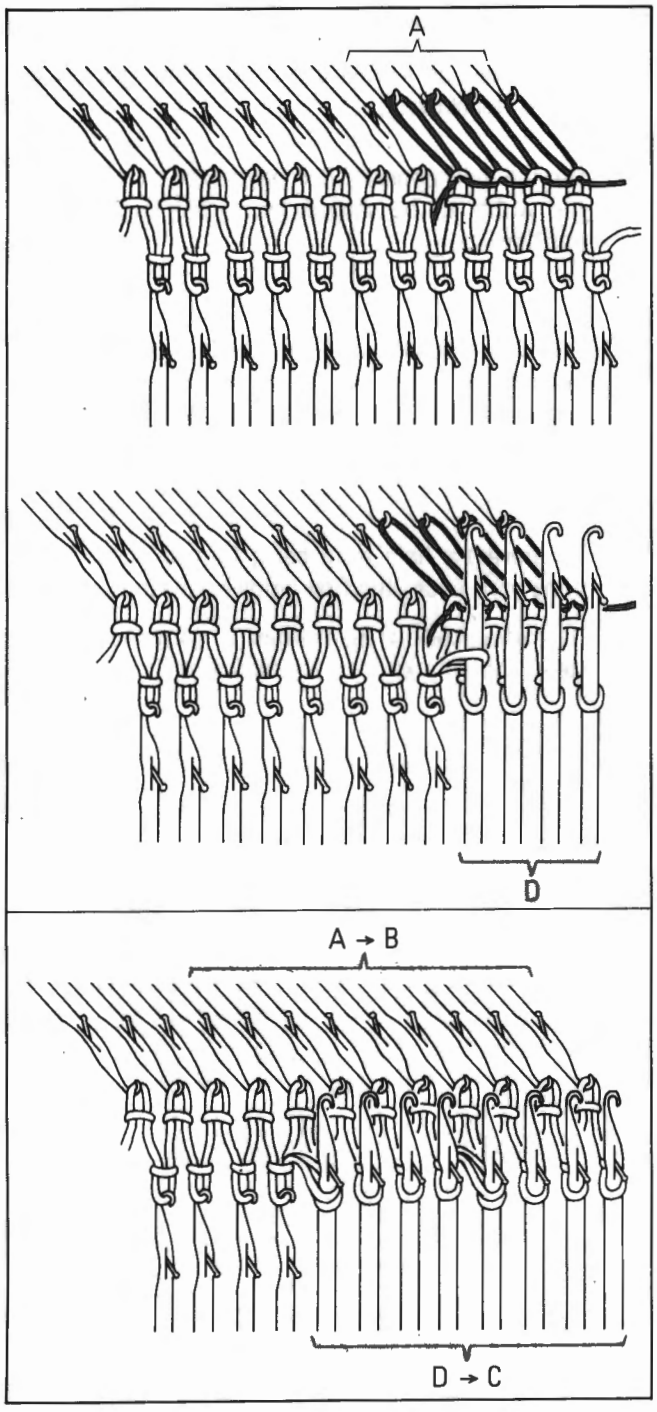

Partial knitting involving "swing"

Knitter needles in D position cross the opposite Ribber needles in D position. Under this condition of needles, you must not swing (by using Swing Handle) Needle Bed, or you will damage the crossed needles. So, a special technique of partial knitting as undermentioned is required for swung English rib, variation swing, herringbone swing and like stitches, all of which involve "swing".

- When working partial knitting in variation swing, knit pushing up 4 or 5 needles in B position to C position.

Partial knitting by decreasing stitches

In the same manner as for partial knitting for stitches without involving "swing", work as follows instead of step (1).

On the side opposite Carriage, to hold stitches on Knitter to be decreased, knit Ravel Cord by hand and push needles back to A position.
Push up corresponding Ribber needles to D position.

At the completion of partial knitting, push needles in D position on Ribber back to C position and replace stitches held on Ravel Cord into hooks of needles on Knitter.

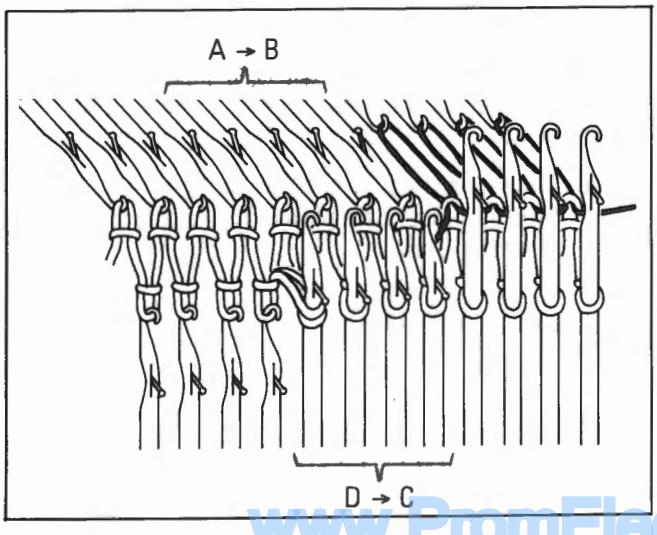

Partial knitting by increasing stitches

On the side opposite Carriage, hold Knitter stitches to be shaped by partial knitting, with Ravel Cord, in A position and corresponding Ribber needles in D position.

At each step in increasing stitches, replace Knitter stitches back into hooks and push corresponding Ribber needles in D position back to C position, before knitting.

Other operations should be carried out in the same manner as decreasing.

To prevent the ravel cord from catching in the knitter or ribber carriage, drop the ends between the needle beds.

www.PromElectroAvtomat.ru

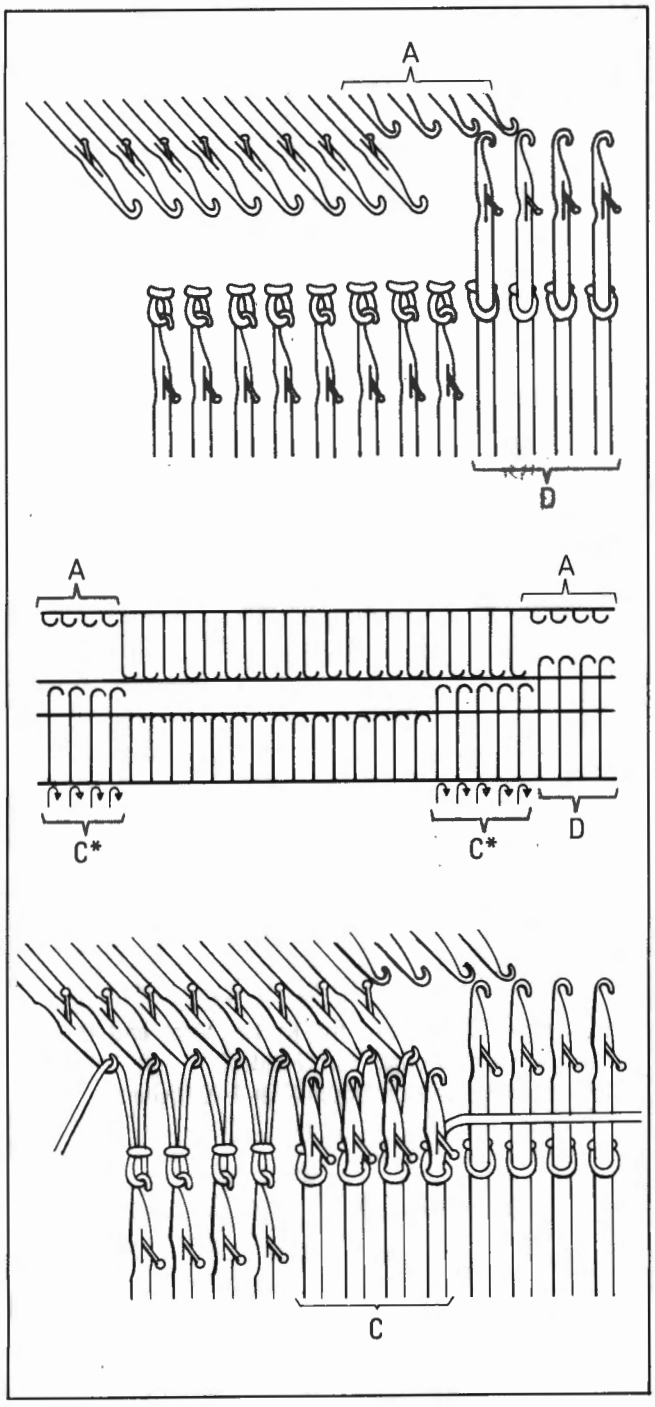

Partial knitting in pile knitting and drive lace knitting

Set Russel Levers on Knitter and Ribber Carriages to I and — positions respectively.

In pile knitting, start partial knitting after removing stitches on Knitter using P Carriage.

Partial knitting by decreasing stitches

(1) On the side opposite Carriage, push Knitter needles to be decreased back to A position, and push up Ribber needles to be decreased to D position.
(If partial knitting is required on both sides, push only Knitter needles to be decreased back to A position on the Carriage side.)

(2) On both sides of Ribber Bed push end 4 or 5 working needles up to D position and then back to C position(*) instead of bringing Ribber needles with P Carriage because it cannot be used in partial knitting.

(3) Knit one row.

(4) To prevent a hole, bring yarn under the first inside needle in D position.
(If partial knitting is required on both sides, push up Ribber needles to be decreased to D position on the side opposite Carriage.)

(5) Work the same manner as done for step (2) and knit one row.

(6) Repeat steps (1)–(5).

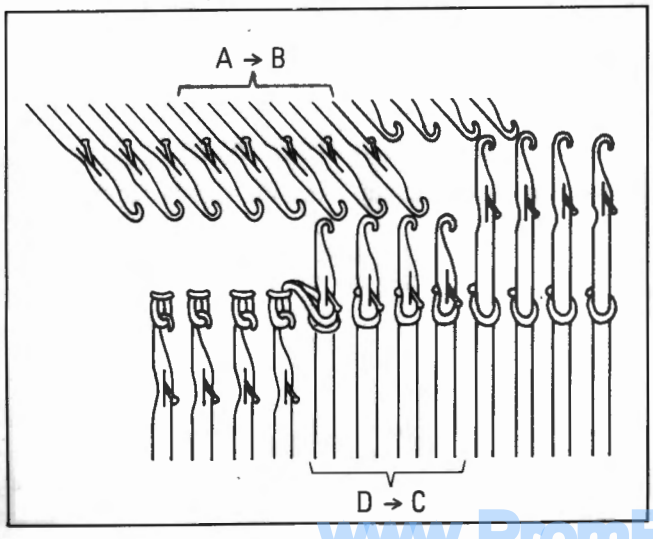

Partial knitting by increasing stitches

On the side opposite Carriage, push Knitter needles back to A position and push up Ribber needles to D position for the width to be shaped by partial knitting.
Push Knitter needles to be increased to B position and push back Ribber needles to be increased to C position.
Other operations should be carried out in the same manner as decreasing.

www.PromElectroAvtomat.ru

Waste knitting

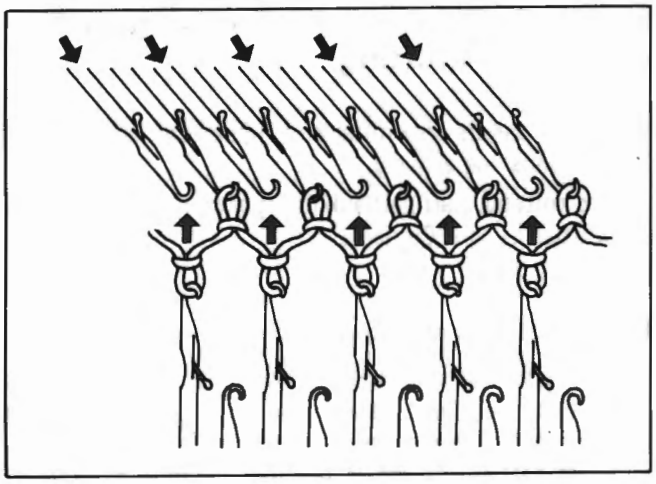

1. On Knitter, push up empty needles to B position.

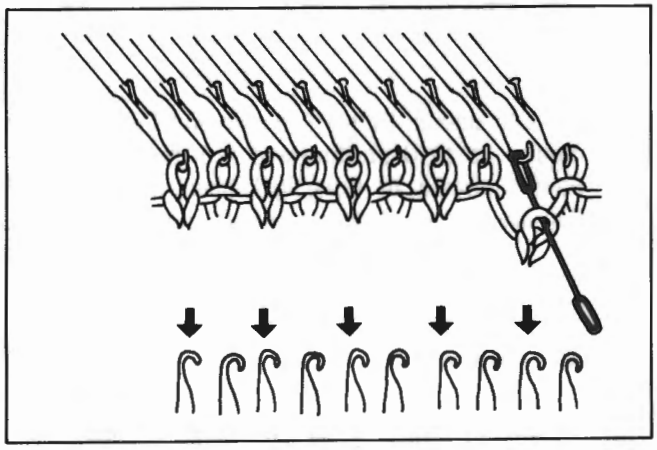

2. Transfer stitches from Ribber to corresponding Knitter needles.
   Drop Ribber to its lowest position.

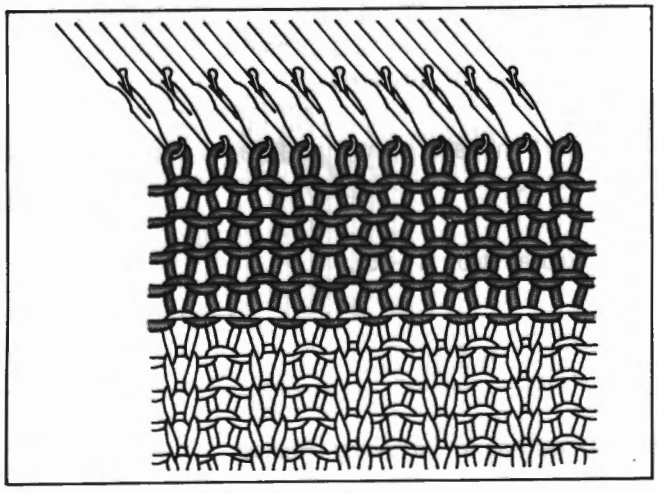

3. Exchange Ribber Arm for Knitter Arm and thread a contrast yarn through Yarn Feeder.
   Knit 9–10 rows with Stitch Dial 4–5 higher.

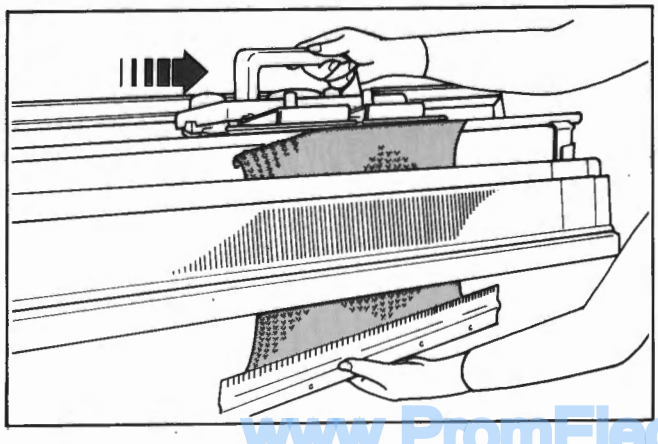

4. Remove yarn and Weights.
   Set Cam Lever to STOCKINET (Λ, O).
   Holding Cast-on Comb, move Carriage to remove fabric from machine.

www.PromElectroAvtomat.ru

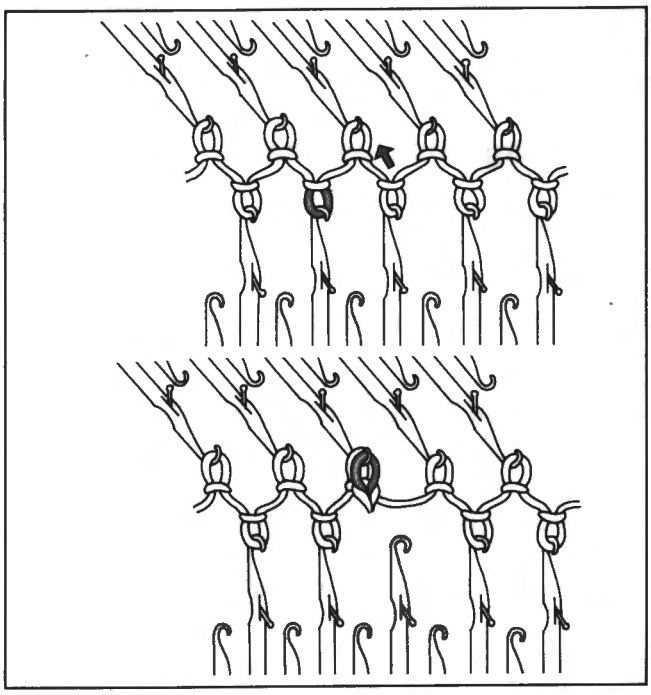

Buttonhole

Single stitch eyelet

(1) At the point for eyelet, transfer 1 stitch from Ribber to Knitter.

(2) Leave empty needle in B position.
Continue to knit.

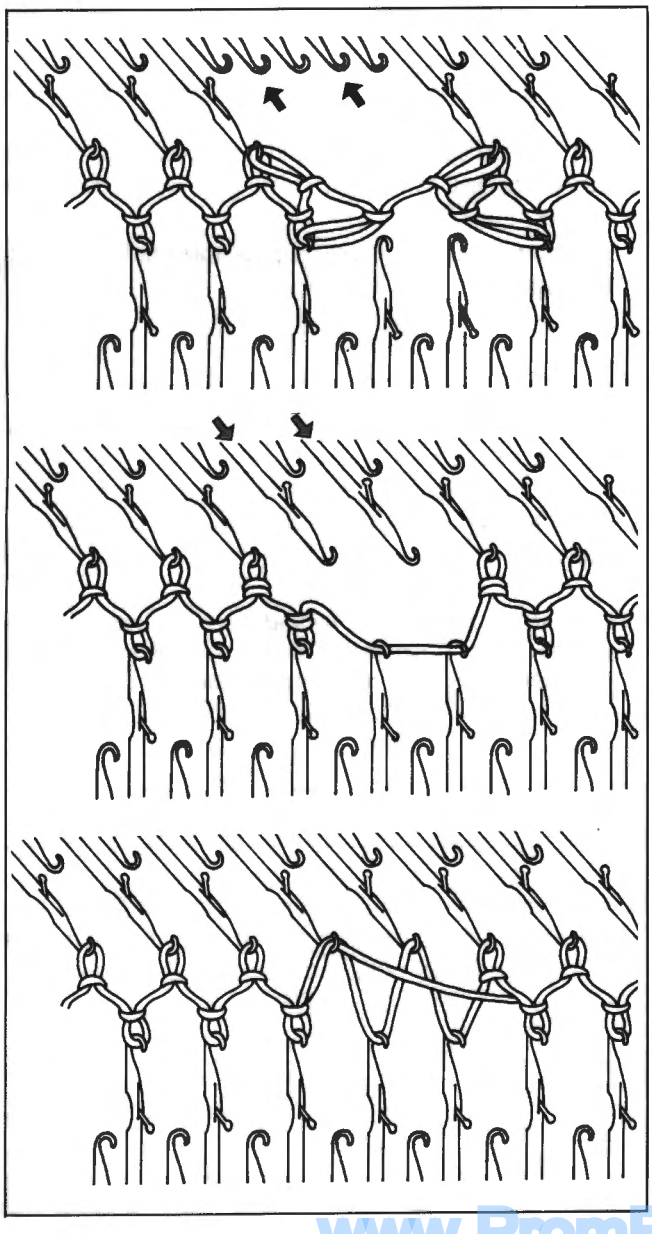

Double stitch eyelet

(1) Transfer 2 stitches on Knitter onto their adjacent stitches at the point for the buttonhole.
Work the same on Ribber.

(2) Push empty needles on Knitter to A position. Leave empty needles on Ribber in B position.

(3) Knit 1 row, then on Knitter, push up needles to B position from which stitches were transferred to adjacent needles.

(4) Knit 1 row.

(5) Hook hanging yarn on Knitter needle.
Continue to knit.

www.PromElectroAvtomat.ru

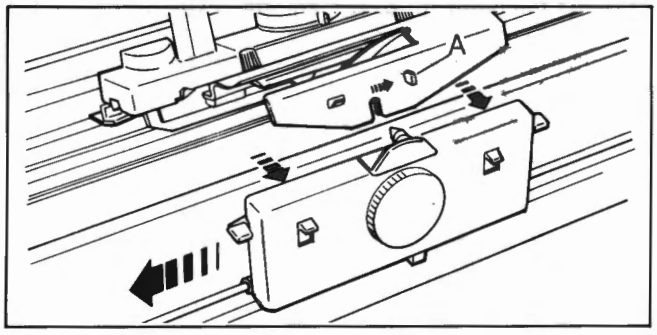

If Carriage has jammed...

1. By pushing Link Knob "A" to the right, disconnect Ribber Carriage from Arm.

2. Tilt Carriage towards you and move it to either end of Needle Bed.

DO NOT PUSH OR PULL THE CARRIAGE BY FORCE.

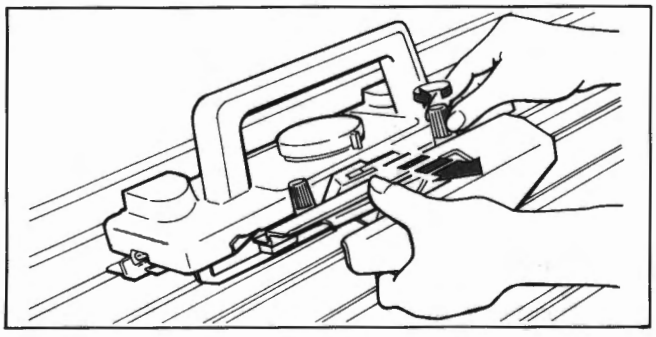

3. Remove Ribber Arm from Knitter Carriage.

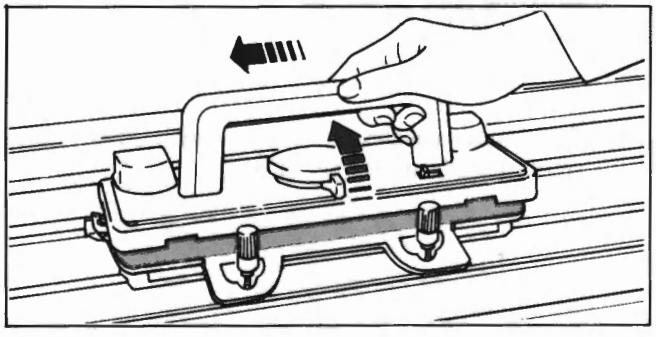

4. Lift up Carriage with its Handle as shown and move it across the needles without knitting till it has cleared the needles.
   (If Point Cams are in use, remove them before moving Carriage.)

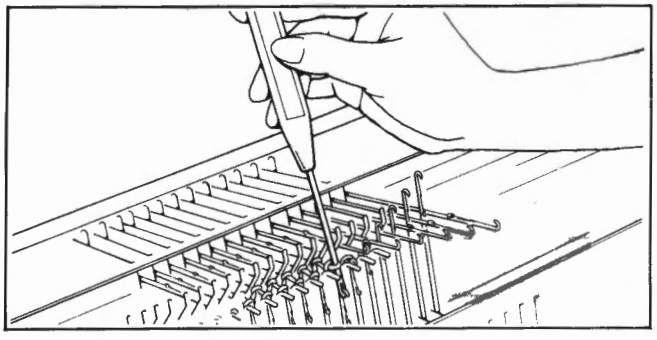

5. Align Knitter and Ribber needles in their original positions.

   If a stitch has slipped behind latch of needle to be aligned, catch stitch with Transfer Tool and put it back to needle hook first, then align needles.

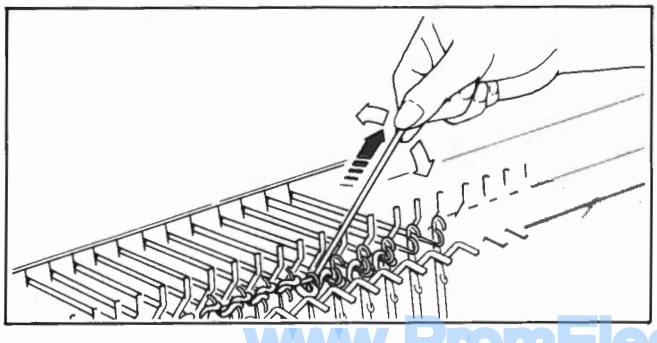

6. Hold yarn and unhook it from Knitter and Ribber needle hooks by pulling it in the arrowed directions in a zigzagging manner until yarn comes to Carriage side.

www.PromElectroAvtomat.ru

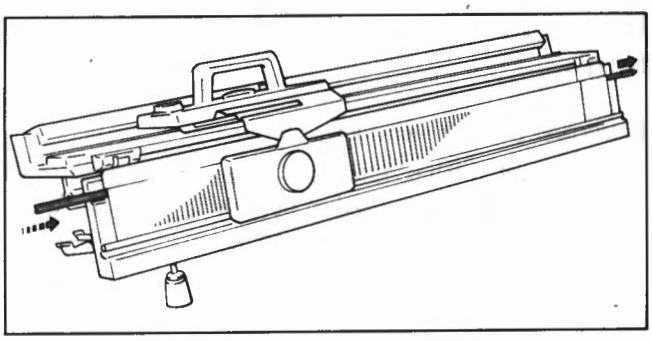

If a needle has been damaged...

A Ribber needle can be replaced in the same manner as applied for replacing a needle on Knitter.

1. Pull Needle Retainer out of Needle Bed.

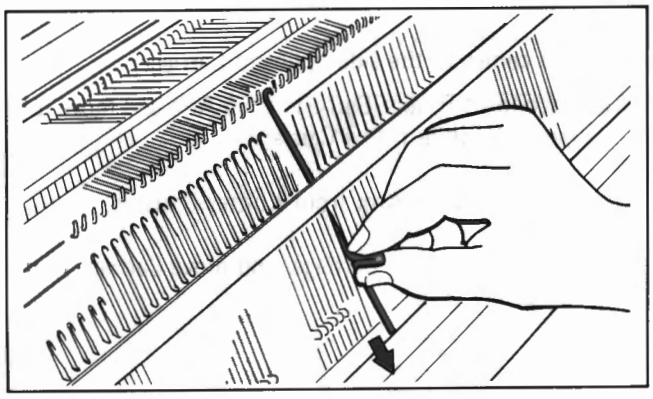

2. Push damaged needle to D position and lift it out of groove by lifting butt.

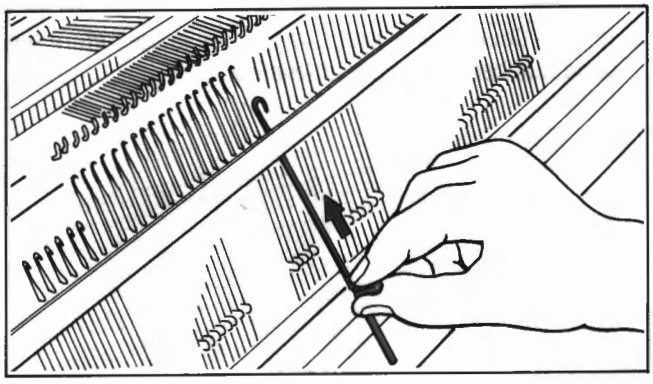

3. To replace a new needle, insert it into groove with its hook first.

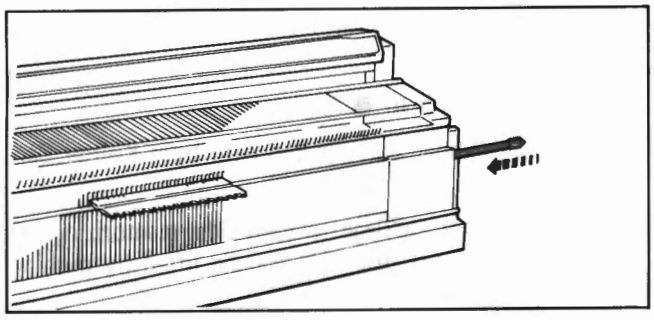

4. Depressing needles with Needle Pusher, insert Needle Retainer.

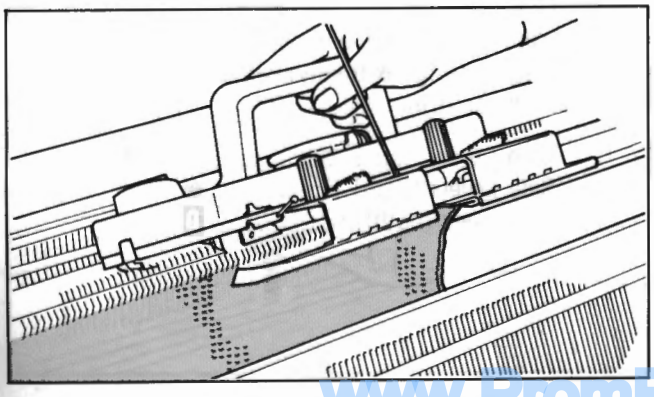

If you knit with Knitter only as Ribber is connected...

1. Disconnect Ribber Arm and Carriage from Knitter Carriage.
2. Lower Ribber to its fullest extent by pushing down Drop Levers twice.
3. Install Knitter Arm and start knitting.

To use Lace Carriage as Ribber is attached, refer to Knitter Instruction Book for the special cares to take.

www.PromElectroAvtomat.ru

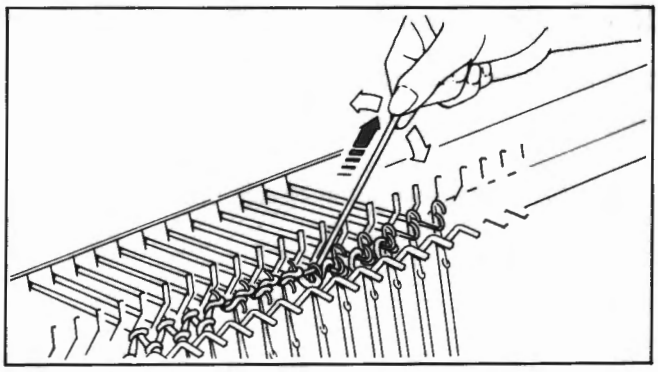

If you have made a mistake in knitting...

1. Unravel the row incorrectly knitted...

   To unravel stitches, hold yarn and unhook them from Knitter and Ribber needles by pulling yarn in the arrowed directions in a zigzag manner.

2. Align needles in B position, then...

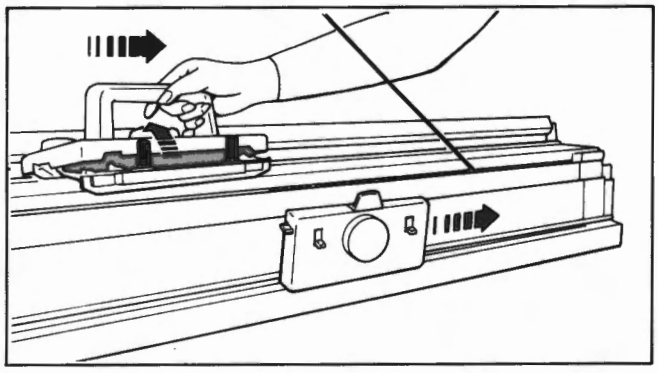

a. If yarn comes to the side opposite Carriage,

(1) Disconnect Ribber Carriage from Arm and move it to yarn side while tilting Carriage.

(2) Remove Ribber Arm from Knitter Carriage.

(3) Lift up Handle of Carriage, and move Carriage to the side of the yarn.

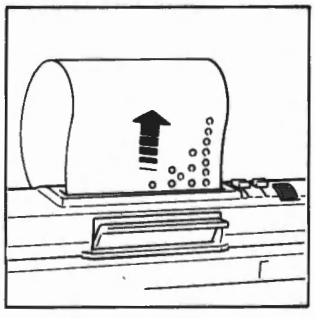

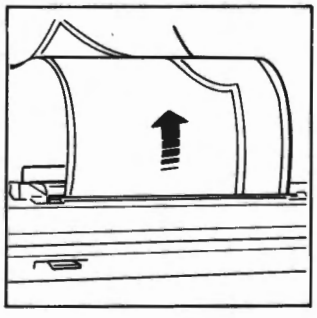

b. If Row Counter and Knit Contour are in use, return the same number of rows as unravelled.

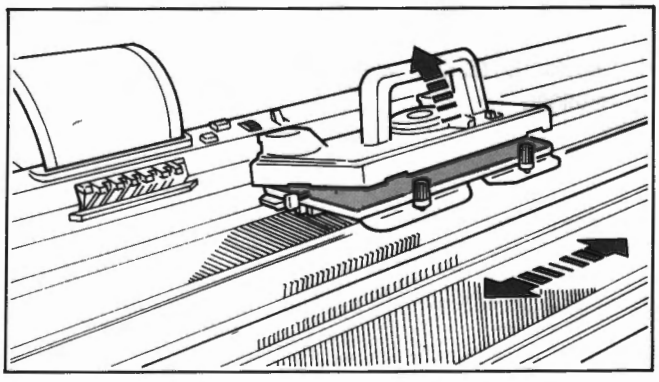

c. If Punch Card is in use,

(1) Return Punch Card by the number of rows unravelled.

(2) Set Stop Knob to ● mark.

(3) Remove Ribber Carriage and Arm from Knitter Carriage. *

(4) Move Knitter Carriage to yarn side, memorizing the pattern of next row with Handle lifted by pushing Release Lever.

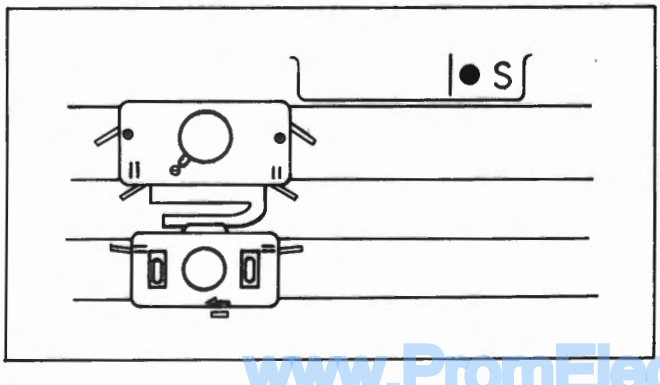

* In case of Carriage without Release Lever, change Carriage settings as follows without removing Ribber Carriage or Arm.

Cam Lever.....SLIP (⊖, S)
Side Levers (both).....●
Set Levers (both).....0

www.PromElectroAvtomat.ru

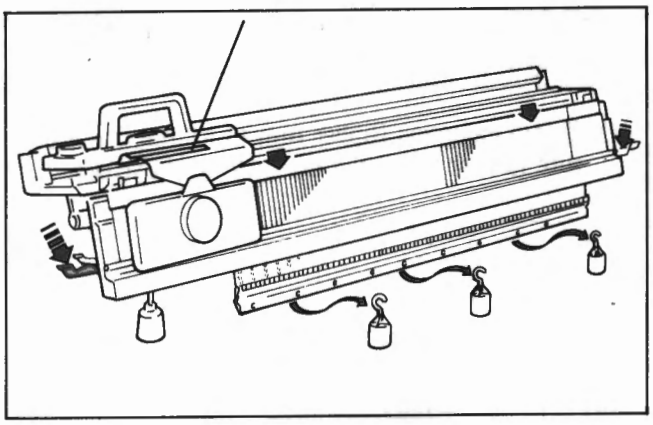

If a stitch has dropped...

1. Remove Weights from Cast on Comb as they may cause dropped stitches to run.

2. Depress Drop Lever and bring down Ribber to middle position.

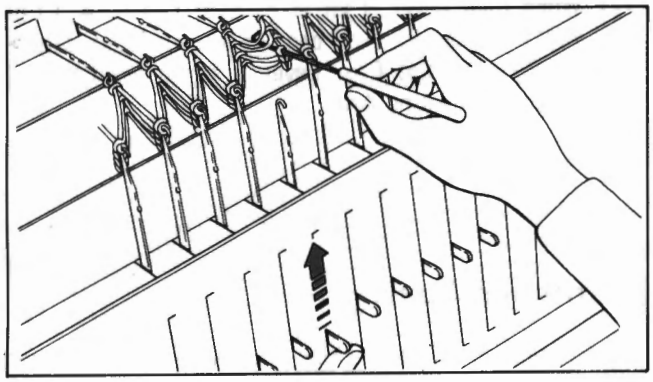

3. With Hook Tool, pick up dropped stitch and place it back on needle hook. Then reform stitches by moving needle back and forth or by using Tappet Tool.

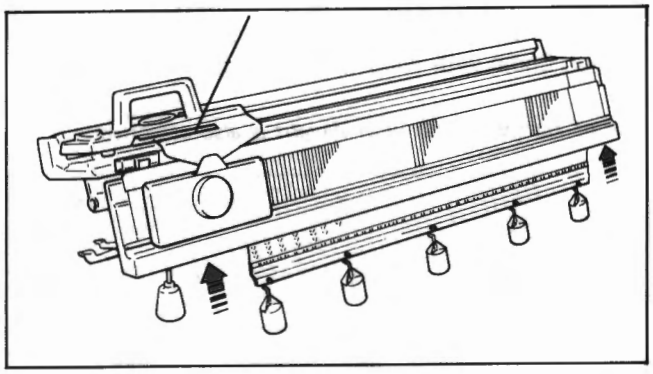

4. Raise Ribber to original position, hook Weights on Cast-on Comb and align needles.

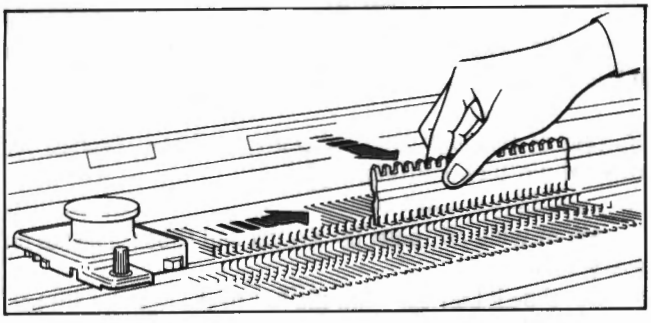

If P Carriage jams...

..... on Knitter .....

Regardless of direction in which you are moving P Carriage, remove it and push all the needles to D position, then move P Carriage from the left to the right.

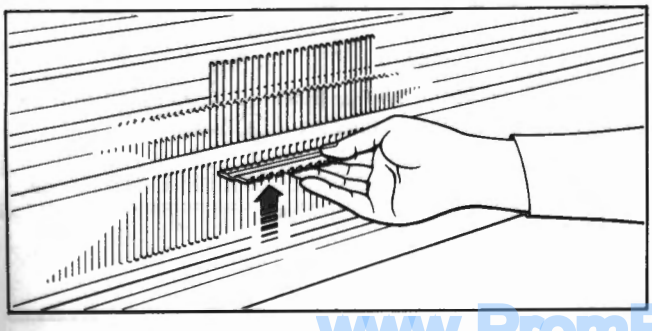

..... on Ribber .....

Remove P Carriage and push all the needles to D position using Needle Pusher, then knit the next row.

If you have failed to align needles into C position for cast-on using P Carriage, push all the needles to D position and move P Carriage twice across the needles starting from right side.
(Needles will align in C position.)

www.PromElectroAvtomat.ru

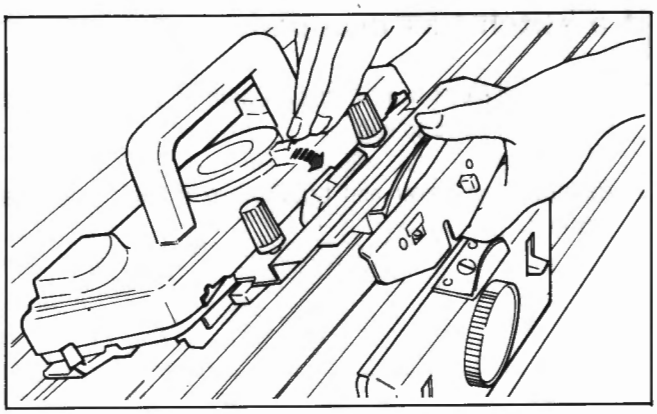

If Ribber Arm does not fit on the Carriage properly...

(1) Before mounting Ribber Arm to Knitter Carriage, be sure to push down the top of Knitter Carriage.

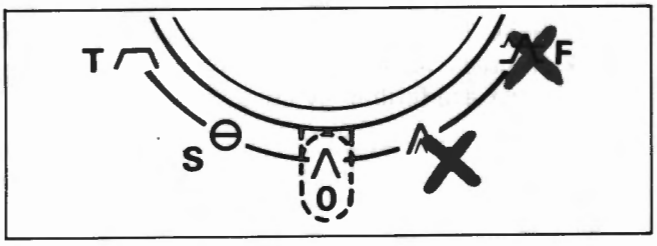

(2) When Cam Lever is set at PUNCH LACE (A, L) or KNIT-IN (A, F), Arm can not be connected correctly. Be sure that Cam Lever is set to STOCKINET before connecting Arm.

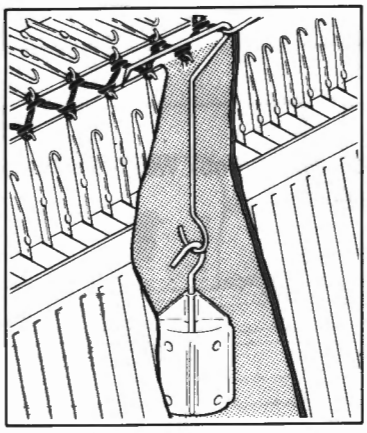

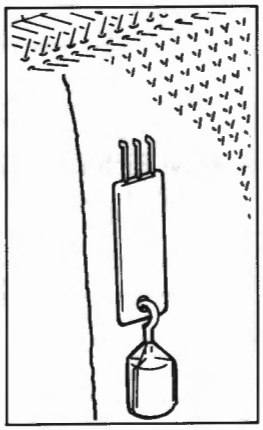

If stitches float...

When edge stitches tend to float, suspend Edge Weight and advance it at an interval of 10–15 rows.

If stitches of half length of knitting float, check to see if Cast-on Comb with Weights is suspended horizontally.

Use of Hanger Comb with Weight is also effective.

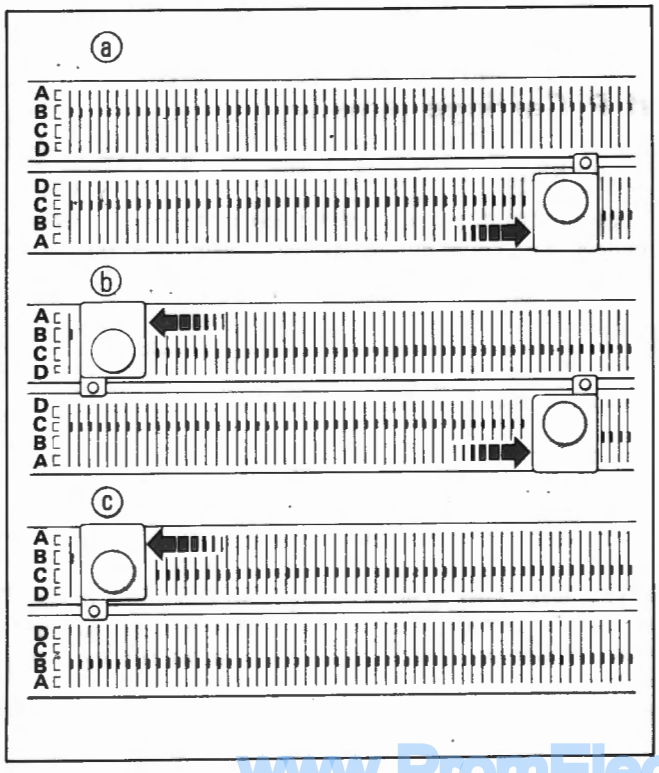

When stitches on full length float, push needles to C position using P Carriage (without P Presser) and knit.

In case of circular knitting, push up needles to D position either on knitter or ribber to be knitted next.

In case of pin tuck knitting, push up Ribber needles for rows of pin tuck knitting. (ⓐ)

In case of wide rib, push up Knitter and Ribber needles on every row. (ⓑ)
Firstly, slide P Carriage from the left to the right on Ribber, and secondly slide P Carriage from the right to the left on Knitter.

In case of variation swing, push up needles on the bed having more number of needles. (ⓐ) (ⓒ)

www.PromElectroAvtomat.ru

MAINTENANCE

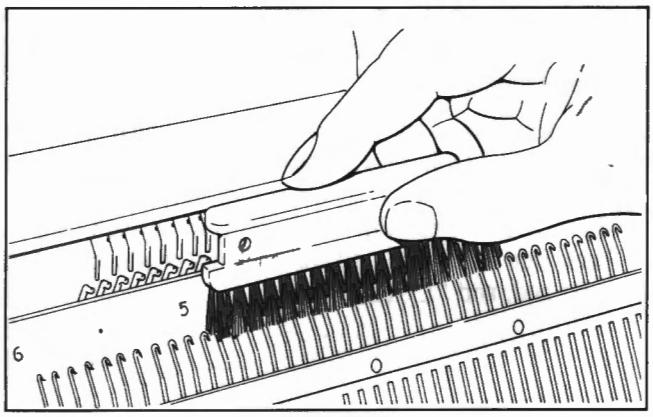

1. With Cleaning Brush remove lint or dust from Needle Bed.

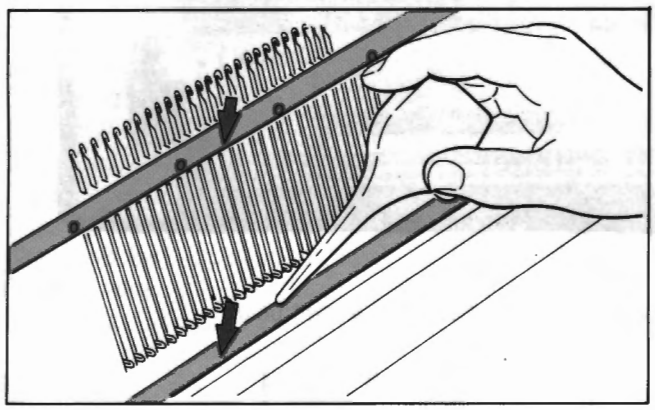

2. Apply lubricant to sliding parts of Needle Bed.
   Do not apply excessive lubricant.
   (Rub off the excessive oil with a cloth.)

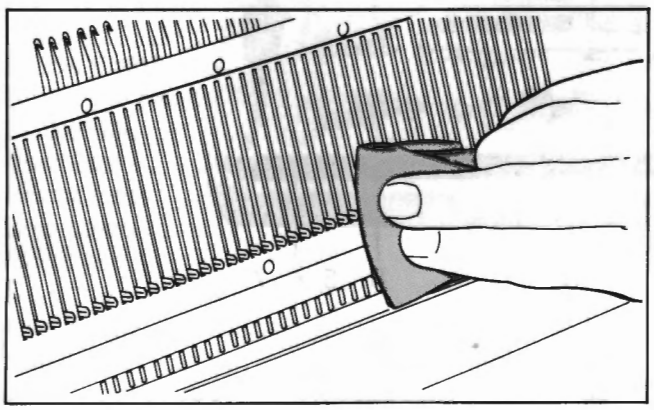

3. Rub latch-needle butts with oil damped cloth.

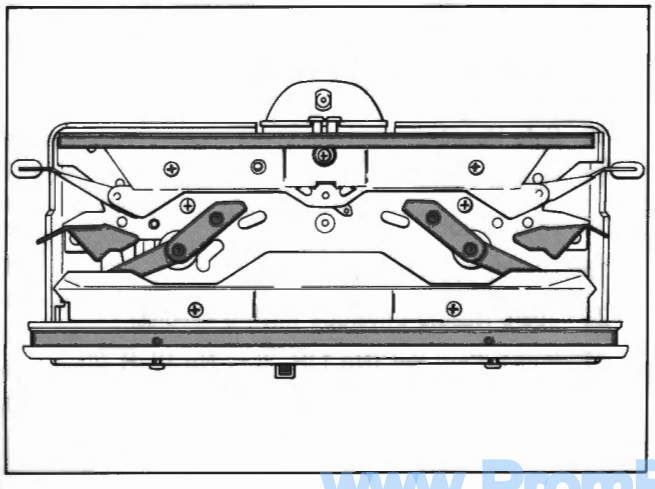

4. Clean underside of Carriage and apply oil over sliding parts with oil damped cloth.

www.PromElectroAvtomat.ru

REPACK RIBBER

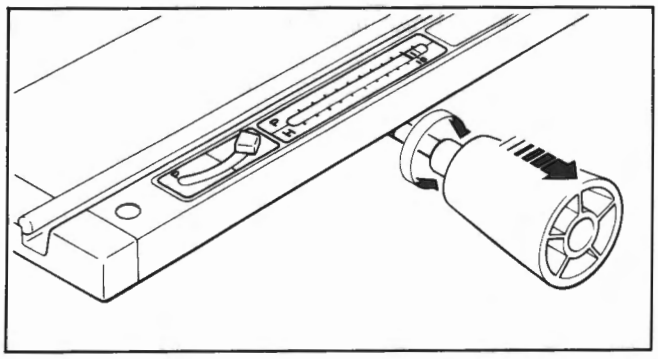

1. Disassemble Ribber by reversing the Procedure for assembling. Set Swing Handle at H–10 and pull it out in a rotating manner.
2. Before putting back Needle Bed into the box, fit plastic packings to both ends of Needle Bed in the following manner:–
   Raise Needle Bed with its Sinker post upward, and its back side facing you, fit the packings engraved "R" to right end, and "L" to left end.

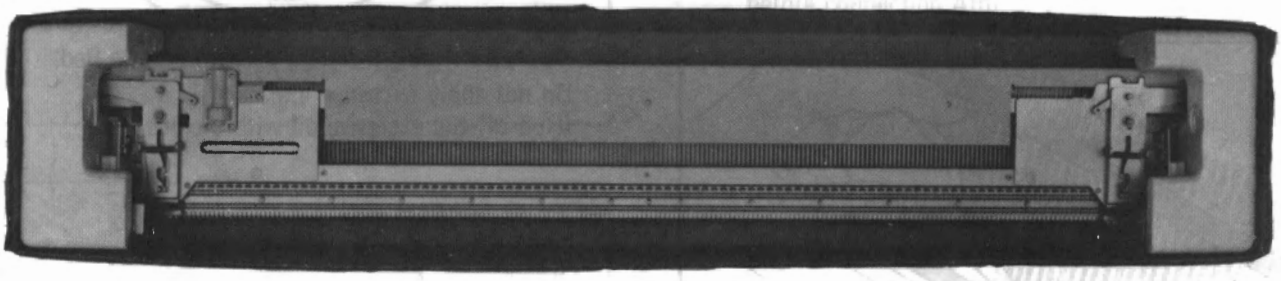

3. Replace Accessories as shown below.

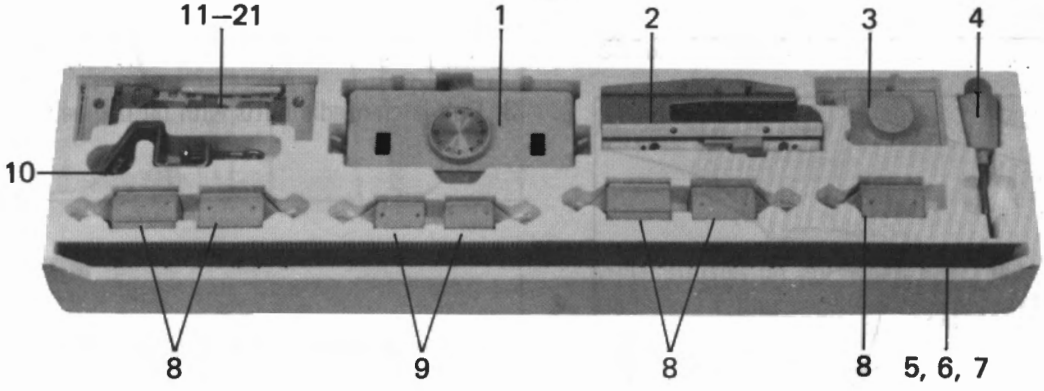

1 Ribber Carriage
2 Ribber Arm
3 P Carriage
4 Swing Handle
5 Close Knit Bar
6 Cast-on Comb (long)
Cast-on Wire (long)
7 Cast-on Comb (short)
Cast-on Wire (short)
8 Ribber Weight (large)
9 Edge Weight
10 Ribber Clamp
11 P Presser
12 Needle Pusher (2/1, 2/2)
13 Screw Driver
14 Auxiliary Piece (L)
15 Auxiliary Piece (R)
16 Side Hanger
17 Hanger Comb
18 Hook Tool
19 Double-eye Transfer Tool
20 Spare Needle Envelope (incl. 3 needles)
21 Punch Card Set (No.1 (R–2) ~ No.10 (R–2))

www.PromElectroAvtomat.ru

INDEX

A

Arm Nuts 6
Arrow mark 13
Auto-Tension 3, 16
Auxiliary Pieces 1, 3
Auxiliary Yarn Feeder 10, 41
Auxiliary Yarn Feeder Lever 10, 13, 15, 41

B

Bracket Socket 3
Butt 55
Buttonhole 53

C

Cam Lever 2, 13, 15, 18, 22, 56
Card Memory number 13
Cast-on 12, 16
Cast-on Comb 1, 13, 17, 23, 37
Cast-on Wire 1
Centre(0) 16, 44
Clamp Screw 16
Closed pile loops 43
Close Knit Bar 1, 14
Contrast yarn 44
Cut Loops 43

D

Decrease of single stitch 47
Decrease of multiple stitches 47
Dot 9
Double English Rib 29
Double-eye Transfer Tool 1, 19
Double Rib 14, 25
Drive Lace 24, 37
Driving Lever 10, 13, 15
Drop Levers 8

E

Edge Weight 1, 20, 46, 58
English Rib 28, 29
Eyelet 53

F

Fastening screw 11

G

Garment 44
Groove 55
Ground yarn 40

H

Half-Pitch Lever 5, 7, 13, 15, 19
Handle 54
Handle of Carriage 56
Hanger Combs 1, 38, 42
Hanger Comb with Weight 58
Herring-bone swing 30
Hook Tool 1
H position 7
H scale 7

I

Increase of multiple stitches 46
Increase of single stitch 46
Initial row 13

K

Knit Contour 56
Knit-in 2, 13
Knitter Carriage 6
Knitter Clamps 2
Knitter needle 7
Knitter Needle Bed 3, 14
Knitter Stitch Dial 13
Knitting position 9
K1. P1. Rib 14, 19, 25
K2. P2. Rib 14, 26

L

Lace Carriage 55
Latch-needle butts 59
Latch of needle 54
Light yarn 40
Link Knob 10
Link Pin 6
L Knob 13, 15
Lubricant 59

M

Machine controls 13
Main knitting 12
Main yarn 44
Main Yarn Feeder 10, 17, 41
Mesh Knitting 24, 39

N

Needle positions 7
Needle Pusher 1, 55
Needle Retainer 55
Non knitting position 9
Non-working needles 45

O

Oil damped cloth 59
Operation Table 12, 23

www.PromElectroAvtomat.ru

P

Partial knitting 48
P Carriage. 1, 11, 38, 57
P Carriage with P Presser 41
Pick Knob 9, 13, 15
Pile Knitting 8
Pile Levers 8, 13, 15
Pile Rib 24, 40, 43
Pile yarn. 40, 41
Pin Tuck 33, 34
Pipe. 6
P mark. 10
Pointer. 5
P position. 7
P Presser. 1, 11
P scale 7
Punch Card. 13, 15, 24
Punch Card Set 1
Punch Lace. 2, 13
Punch Pin Tuck. 24, 34
Punch Tuck Rib 24, 35
Push-up Cams 4, 5

R

Rail. 11
Rail guide. 11
Ravel Cord 33, 50
Rest position. 10
Ribber Arm 1, 6
Ribber Carriage 1, 6
Ribber Clamps 1, 2
Ribber Joiners. 4
Ribber Joiner Screws 3, 5
Ribber Needle Bed 6
Ribber Needle Hook. 19
Ribber Needles 7, 42
Ribber sinker posts 22, 37, 40
Ribber Stitch Dial 13, 33
Ribber Stopper 4
Ribber Weight. 1
Rib knitting 13
Rib stitches 24
Row Counter 56
Russel Levers 9, 13, 15, 22, 51

S

Screw Driver. 1, 4
Set Levers 9, 13, 18, 22, 56
Side Hanger 1, 20
Side Levers. 13, 15, 38, 42, 56
Sinker Posts 11, 14
Slip stitch. 13, 37
Spare Needle Envelope 1
Stitch Dials. 9, 15, 18
Stitch size 9
Stitch type 44
Stockinet 2, 13, 37
Stop Knob 13, 15, 38, 42
Stopper Pin. 6
Swing 28
Swing Bearing 5
Swing Handle 1, 5
Swing Indicator 5, 7, 13, 15
Swing operation. 30
Swung English Rib. 28
Swung patterns 31

T

Tappet Tool 57
Tension gauge 44
Tension Swatch 44
Thickness of yarn 14
Tighter edge 23
Transfer Tool 54
Tubular knitting 14, 33
Tucking effect. 28
Tuck Rib stitch 14, 24, 36
Tuck stitch 13, 35
Type of knitting 14

V

Variation Swing. 31

W

Waste knitting. 52
Waste yarn 41
Weights 23, 42
Wide Rib 14, 27
Wooly-nylon yarn 40

Y

Yarn Changer 10
Yarn Feeder 16, 17
Yarn Guide. 41
Yarn marks. 44
Yarn Rod 3

Z

Zigzag pattern 20, 31

www.PromElectroAvtomat.ru

www.PromElectroAvtomat.ru

英

www.PromElectroAvtomat.ru

Printed in Japan 1984.7. Ⅲ－2