DÜRKOPP ADLER AG

Teileliste und Klammersaetze
Parts List and Clamp sets

530

DÜRKOPP ADLER AG

Postfach 17 03 51, D-33703 Bielefeld • Potsdamer Strasse 190, D-33719 Bielefeld
Telefon +49 (0) 5 21 / 9 25-00 • Telefax +49 (0) 5 21 / 9 25 24 35 • www.duerkopp-adler.com

Ausgabe / Edition:	Änderungsindex		Teile-Nr./Part.-No.:
08/2007	Rev. index: **02.0**	Printed in Federal Republic of Germany	**0791 530801**

www.promelectroavtomat.ru

530

Inhaltsverzeichnis	Tafel / Table	Contents
Nadelstange	1	Needle bar
Armwelle	2	Arm shaft
Fadenwischer	3	Thread wiper
Klammerlueftung	4	Clamp lift
Greifertreiber	5	Hook driver
Fadenspannung	6	Thread tension
Fadenabschneider	7 - 9	Thread cutter
Transporteinrichtung (Klammer)	10	Feed drive (Clamp)
Klammerfuesse	11	Clamp feet
Knopfklammer	12	Button clamp
Kontraktionsklammer	13	Contraction clamp
Stielbildner	14, 15	Button shank shaper
Transporteinrichtung (Schrittmotore)	16	Feed drive (Step motors)
Spuler	17	Winder
Rahmen und Abdeckung	18	Frame and covering
Schmierung	19	Lubrication
Gestell	20	Stand
Elektroteile	21	Electronics
Bedienfeld	22	Control panel
Handtaster	23	Push buttons
Lasermarkierungsleuchte	24	Laser mark lamp
Beipack / Zusatzausstattung	25	Accessories / Optional equipment
Plaene		Plans

Alle Rechte vorbehalten.
Eigentum der Dürkopp Adler AG und urheberrechtlich geschützt. Jede, auch auszugsweise Wiederverwendung dieser Inhalte ist ohne vorheriges schriftliches Einverständnis der Dürkopp Adler AG verboten.

All rights reserved.
Property of Dürkopp Adler AG and copyrighted. Reproduction or publication of the content in any manner, even in extracts, without prior written permission of Dürkopp Adler AG, is prohibited.

Copyright © *Dürkopp Adler AG - 2007*

www.promelectroavtomat.ru

1	2	3	4
0510 D280515 **0570 001015 Ersatz** ***replacement*** Spule, normal *Bobbin*	**0510 D280511** Spulenkapsel, normal *Bobbin case*	**0510 1818-282-N00** Greifer, normal *Hook*	**0510 5100517Z** Treiber, normal *Driver*

5	6	7	8
0530 E380210 **0530 5300207 (∅1,6)** **0530 5300208 (∅2,0)** Stichplatteneinsatz *Throat plate insert*	**0510 D816-6** **0510 350060 (ab 07.05/ from 07.05)** Gegenmesser FA *Counter-knife*	**0510 D816-3;12** **0510 350033 (ab 07.05/ from 07.05)** Hakenmesser *Hooked blade*	**0510 D816-13-1 (0,8)** **0510 D816-13-2 (0,7)** **0510 D816-13-3 (0,6)** **0510 D816-13-4 (0,5)** Distanzscheibe für Pos.7 *Distance washer for pos.7*

9	10	11	12
0510 5101204 Abreißmesser *Tear off knife*	**0510 D281219** Gummiring *Rubber ring*	**0530 5300339Z** Klammerfuss, links *Clamping foot, left*	**0530 5300340Z** Klammerfuss, rechts *Clamping foot, right*

www.promelectroavtomat.ru

13	14	15	16
	0510 E380207 Fadenführung *Thread guide*	**0510 510G0204 (M3x4)** Schraube für Pos.16 *Screw for pos. 16*	**9092 013500 090** Nadel *Needle*

17	18	19	20
0510 D8.05-8 Stegscheibe *Disc*	**0510 D8.05-15** Spannungsscheibe *Tension disc*	**0510 5100719** Fadenanzugsfeder *Thread take-up lever*	**0933 001544** Ölpumpe *Oil pump*

21	22		
9822 642010 Halogenlampe 12/20W *Halogen bulb 12/20W*	**9825 810219 (F6,3A)** **9825 810417 (T6,3A)** Sicherung *Fuse*		

www.promelectroavtomat.ru

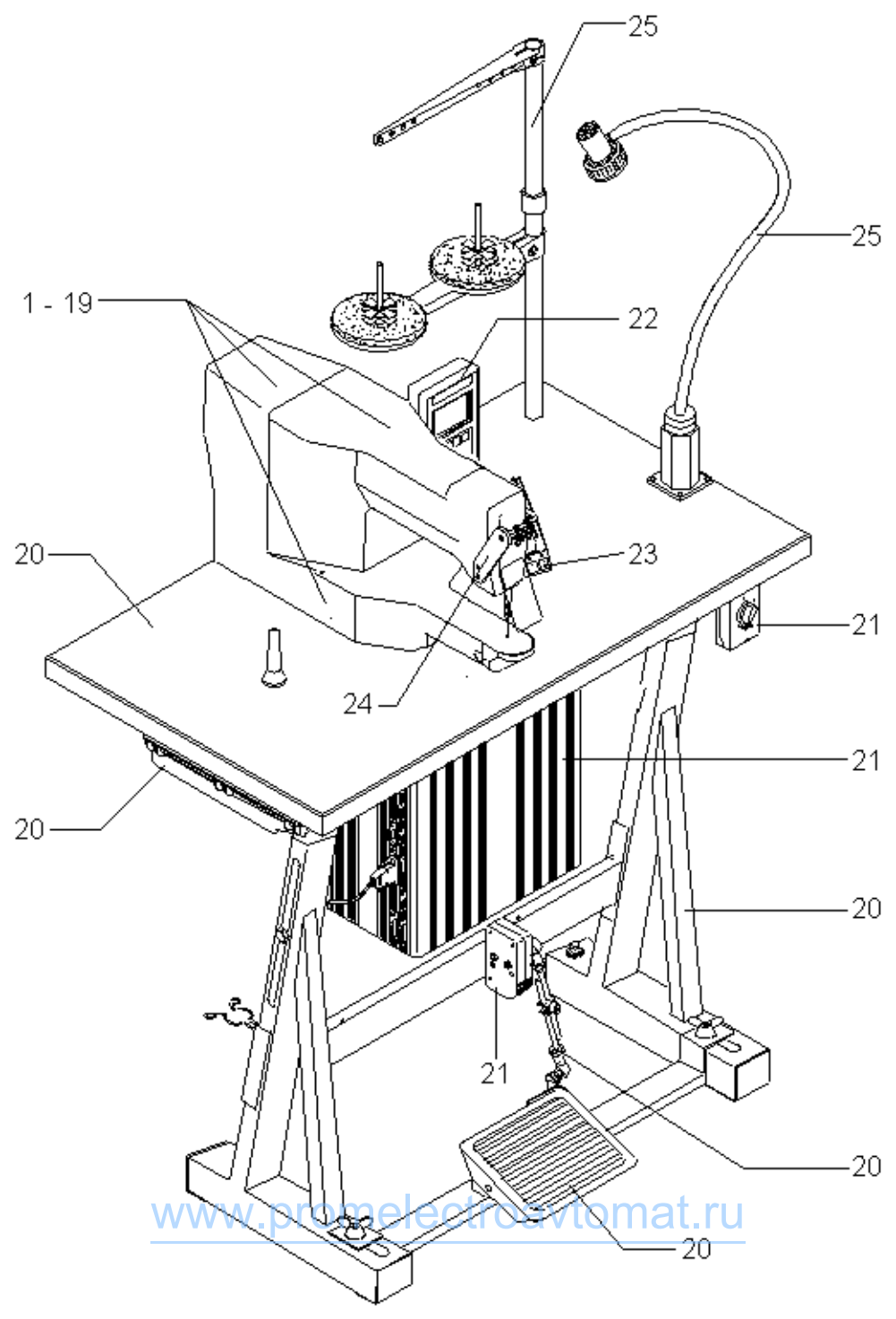

www.promelectroavtomat.ru

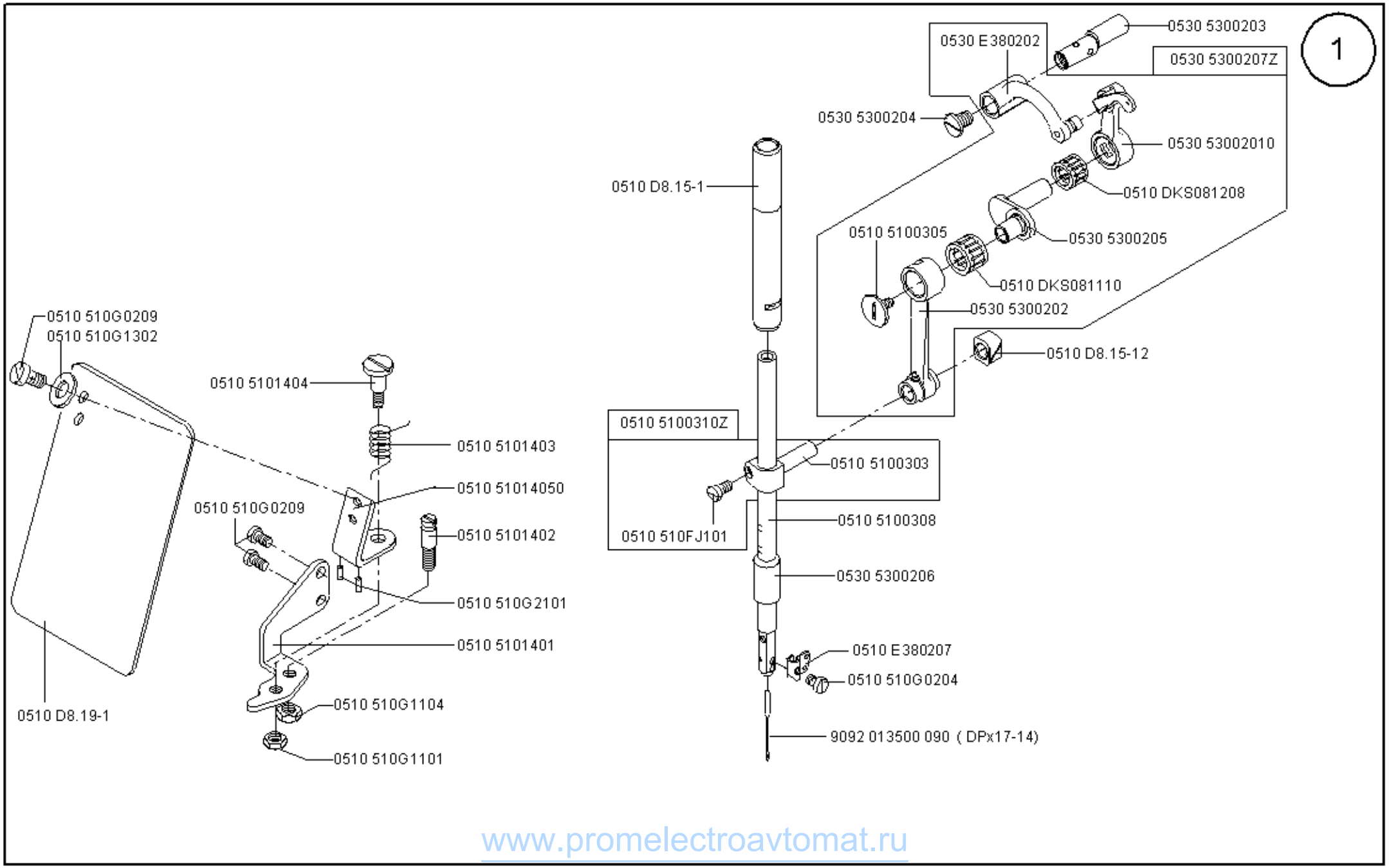

www.promelectroavtomat.ru

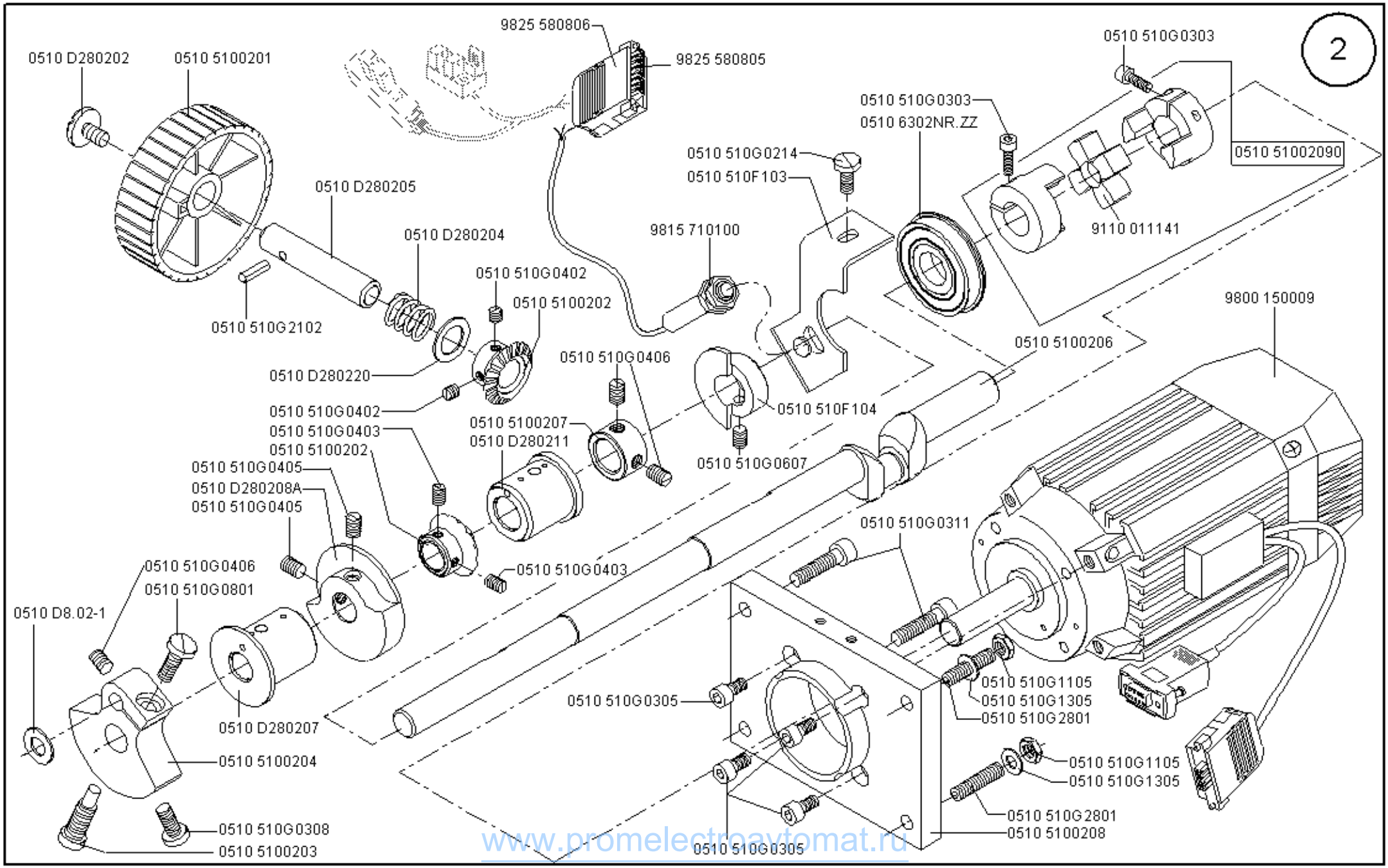

www.promelectroavtomat.ru

Scale 50 %

Cl. 530

Ausgabe/Edition 08.2007

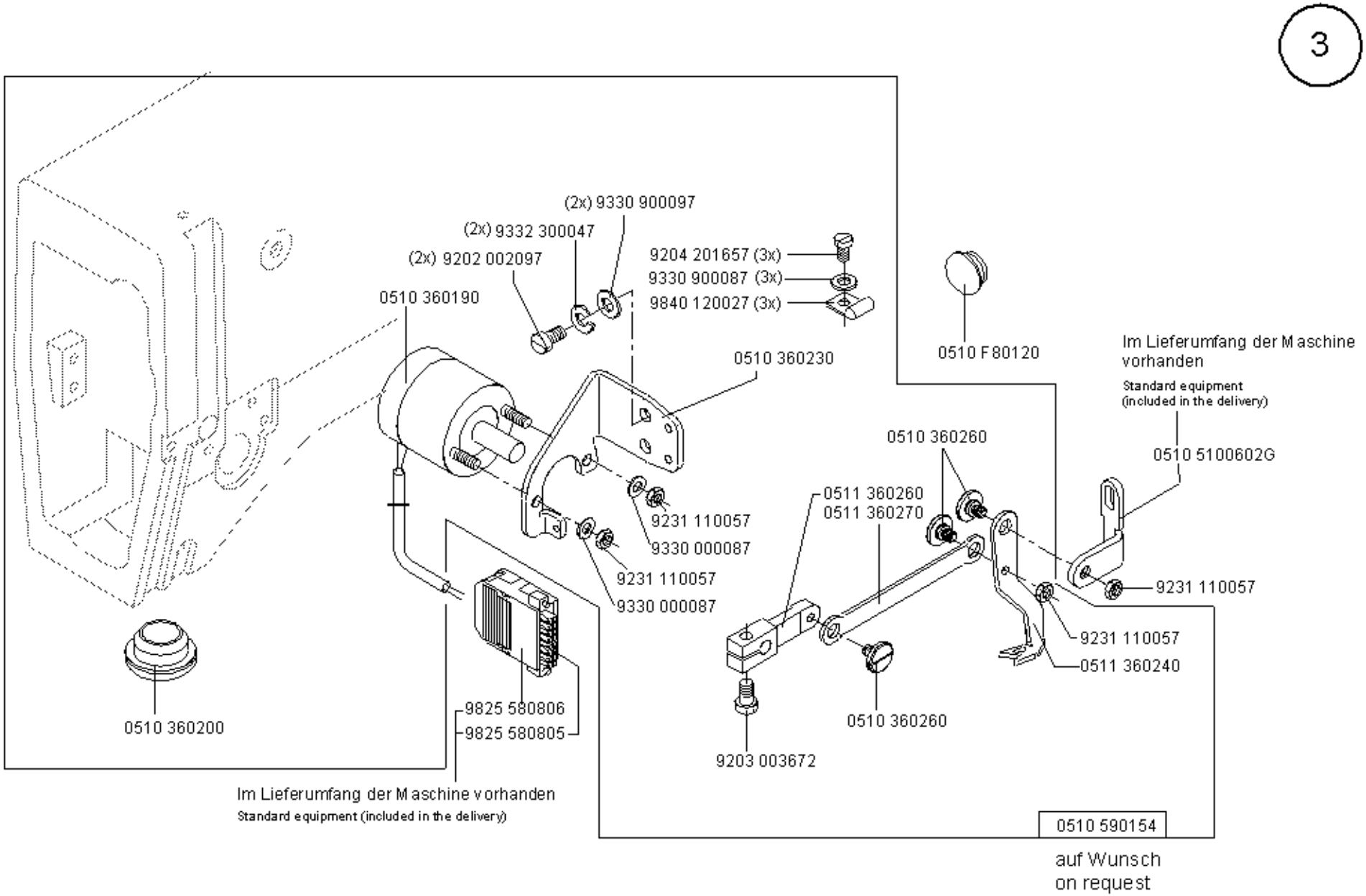

www.promelectroavtomat.ru

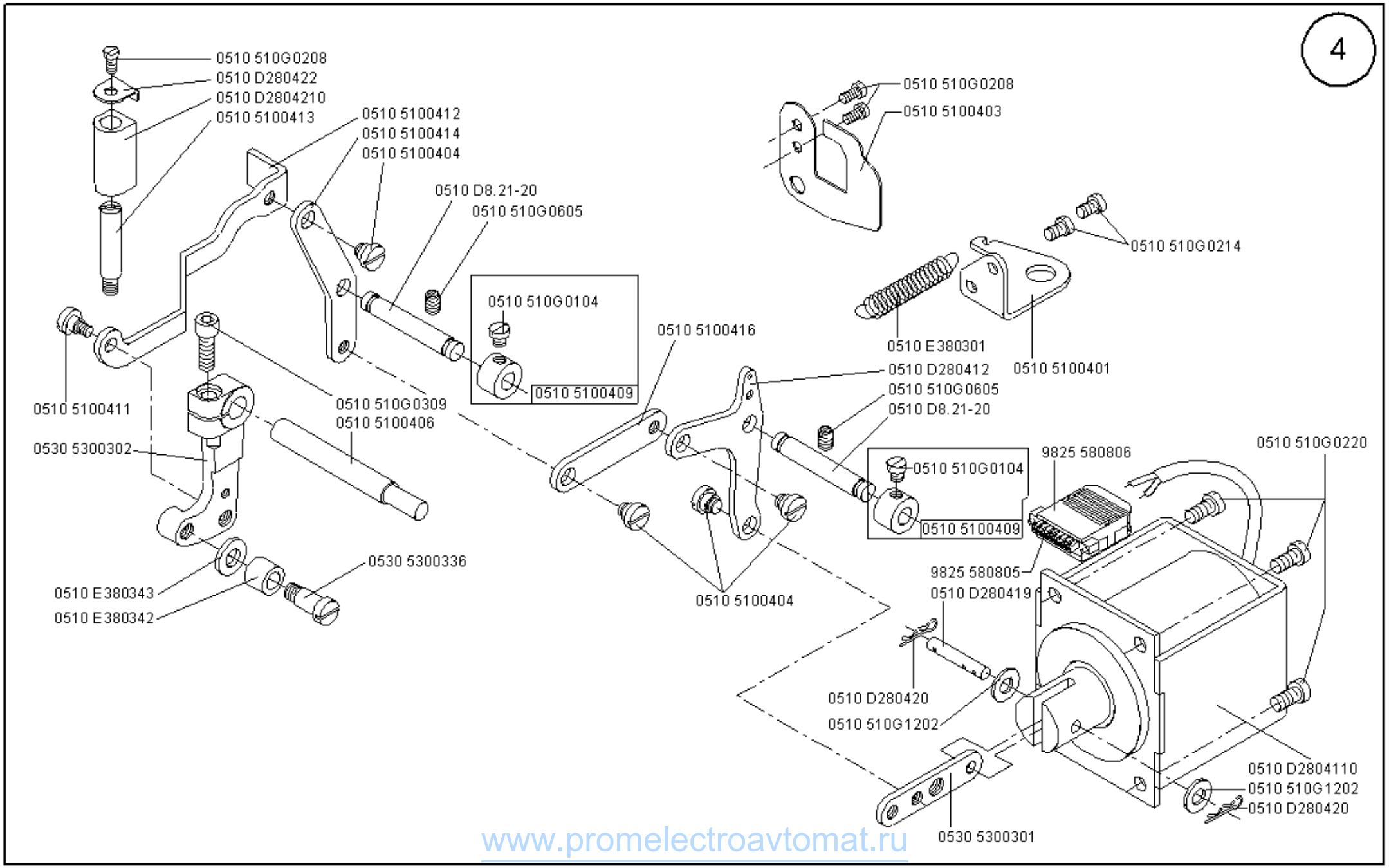

www.promelectroavtomat.ru

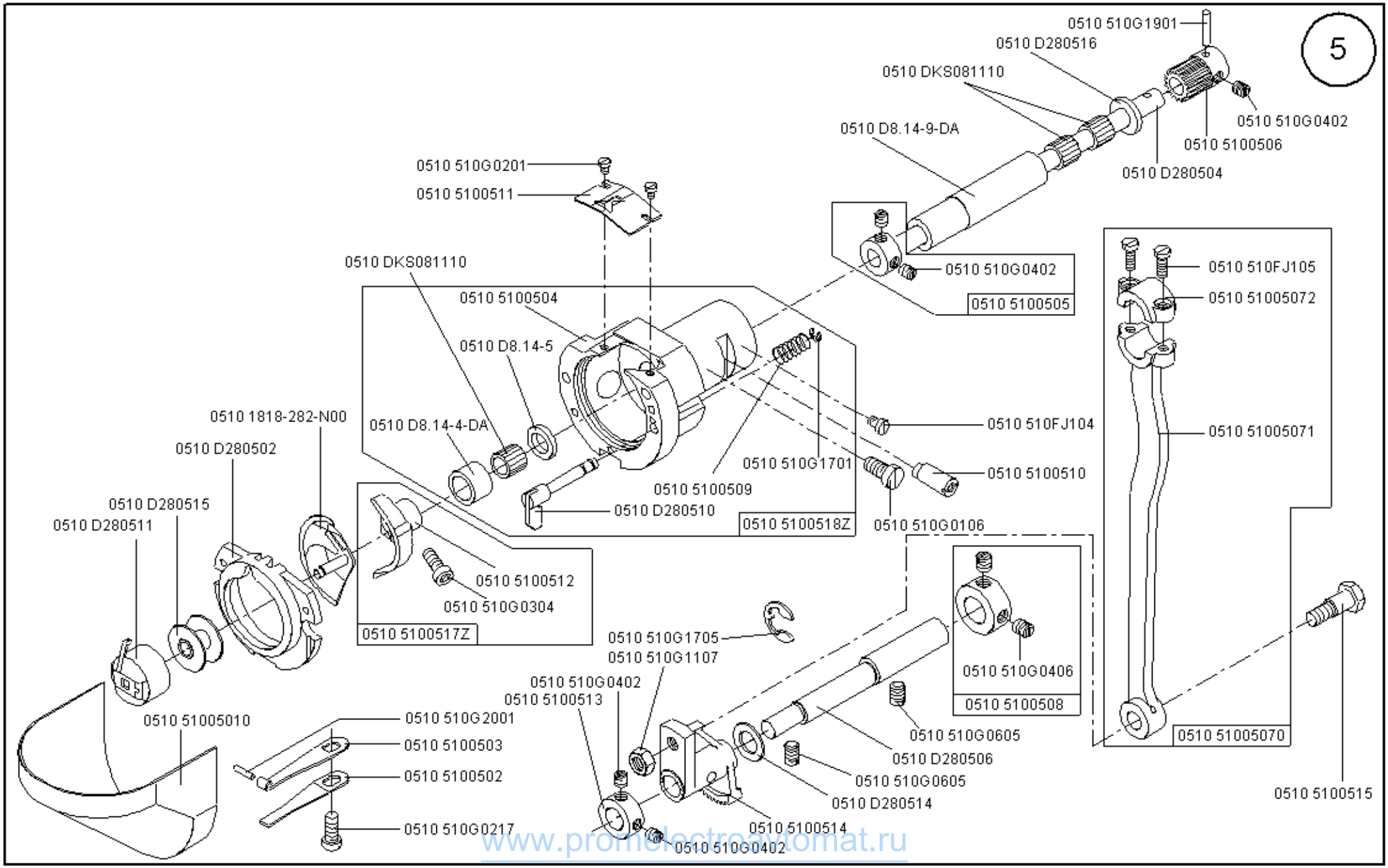

www.promelectroavtomat.ru

Scale 50 %

Cl. 530

Ausgabe/Edition 08.2007

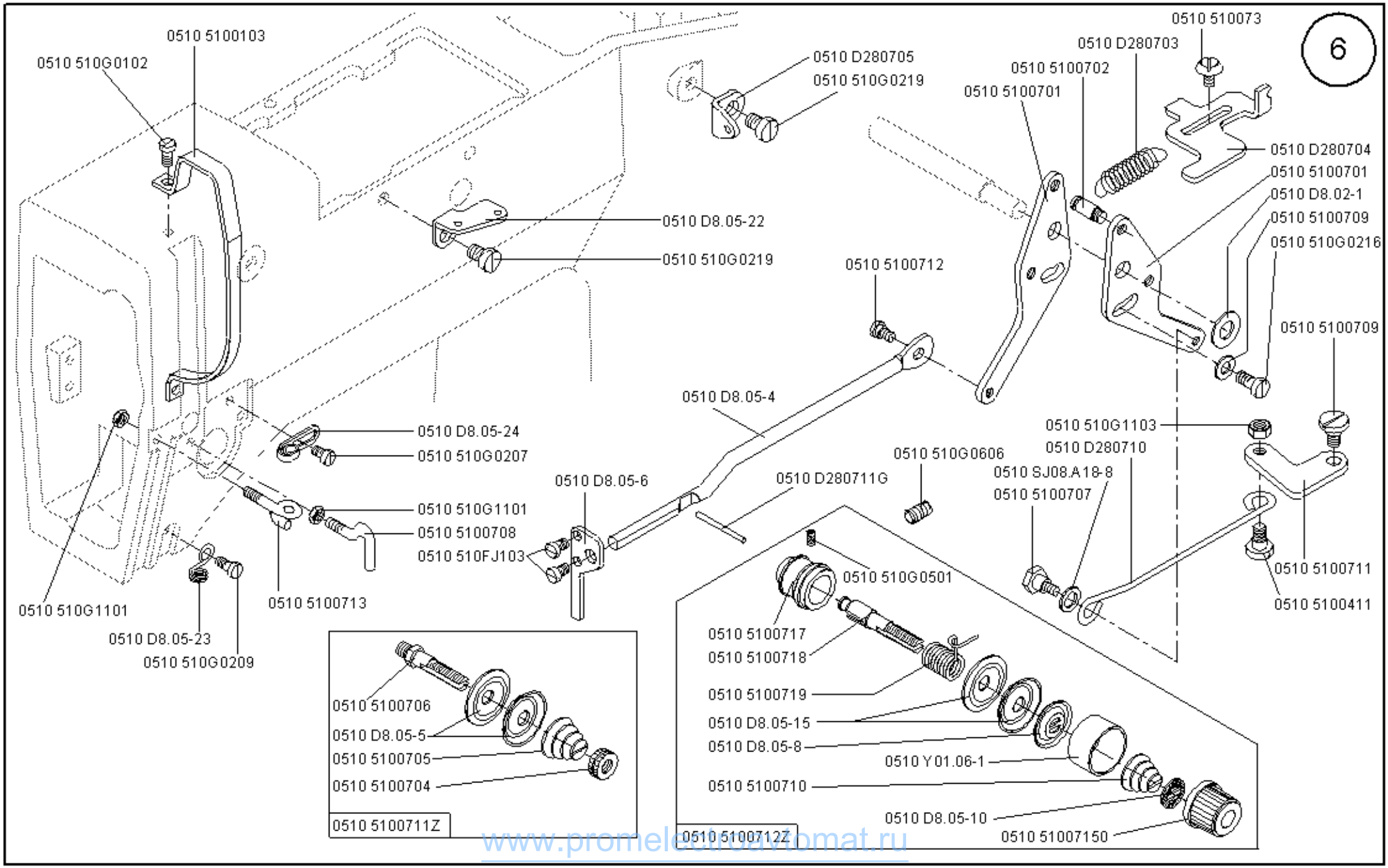

www.promelectroavtomat.ru

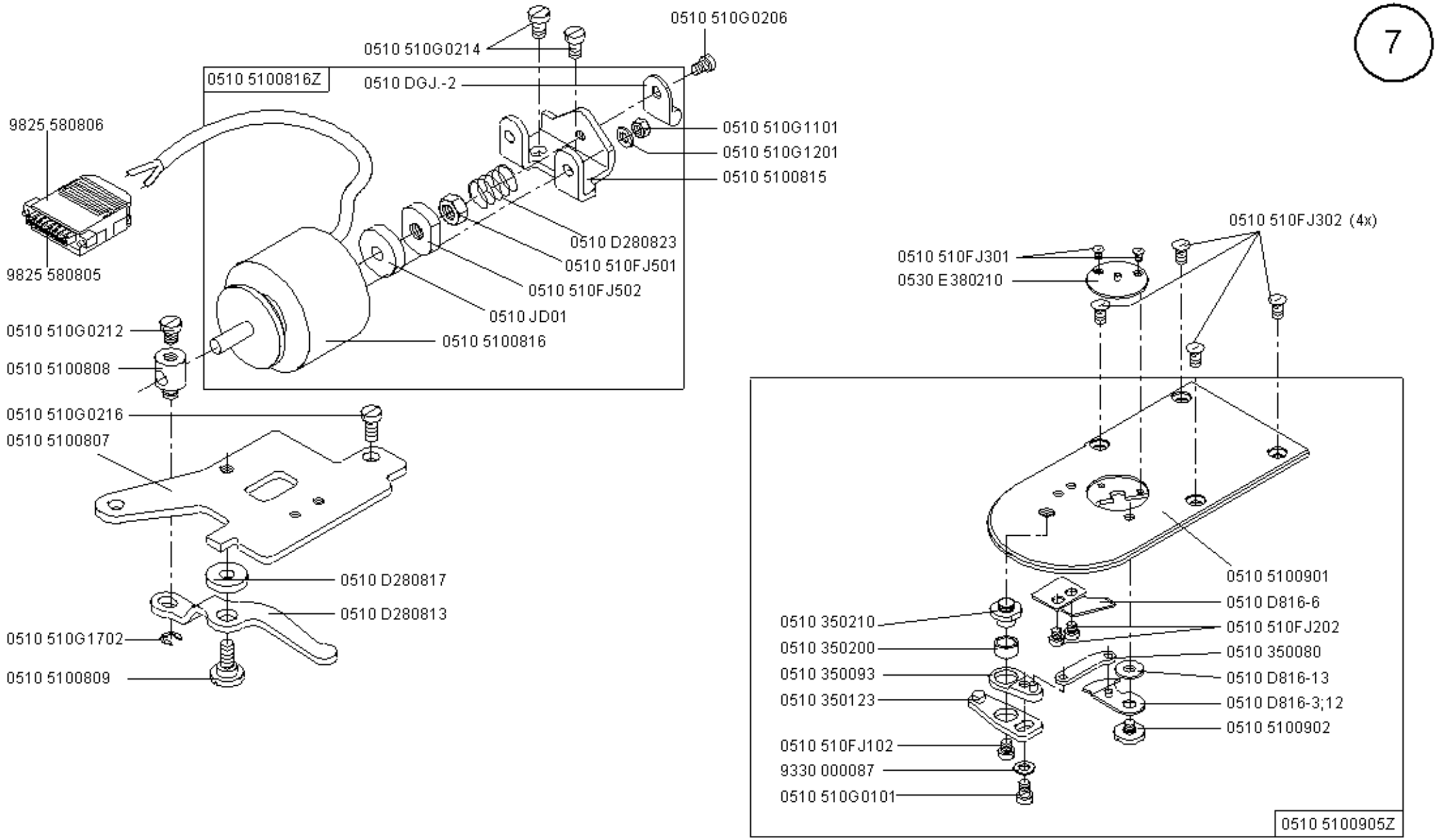

bis 06.2005 - up to 06.2005

www.promelectroavtomat.ru

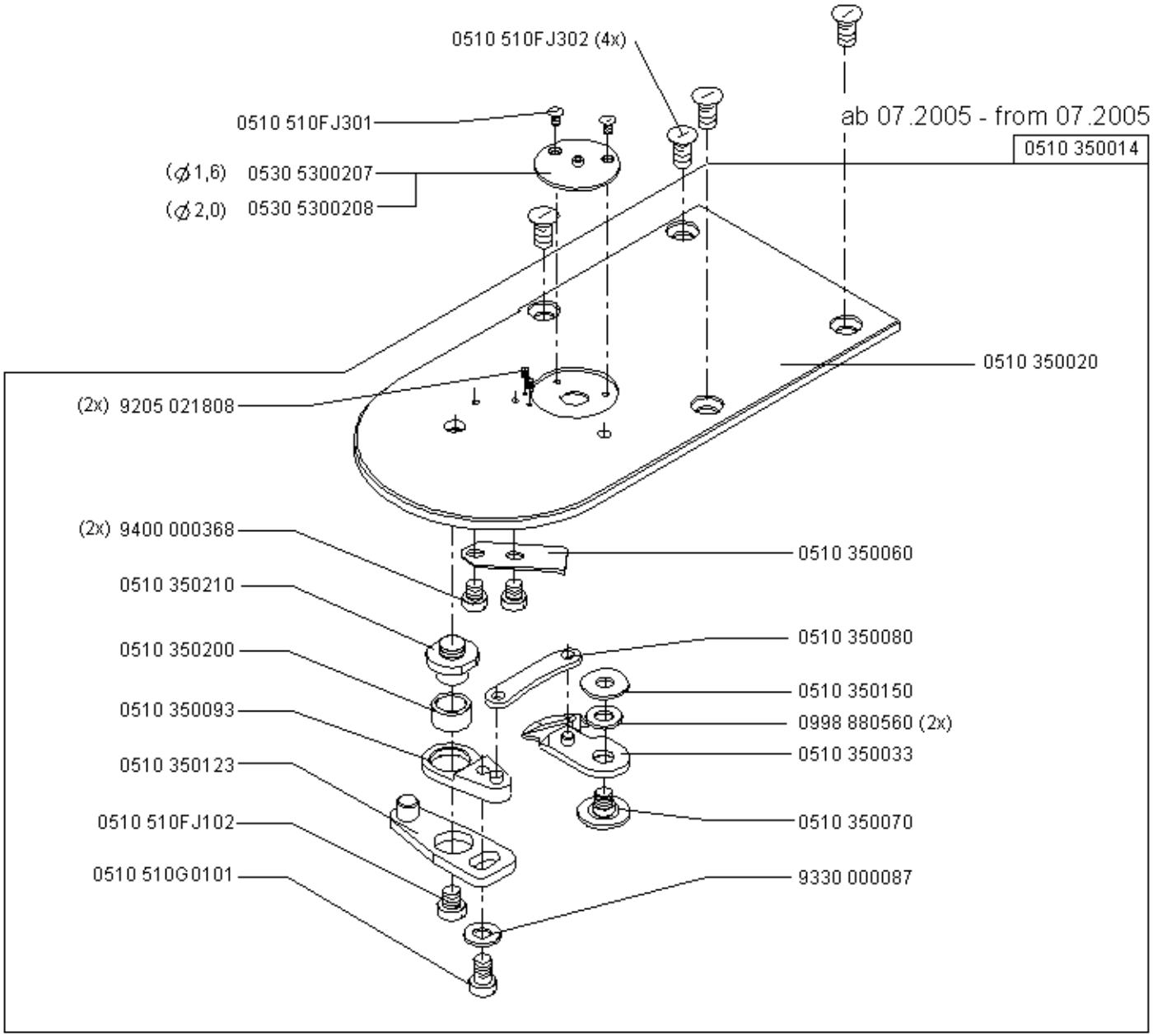

www.promelectroavtomat.ru

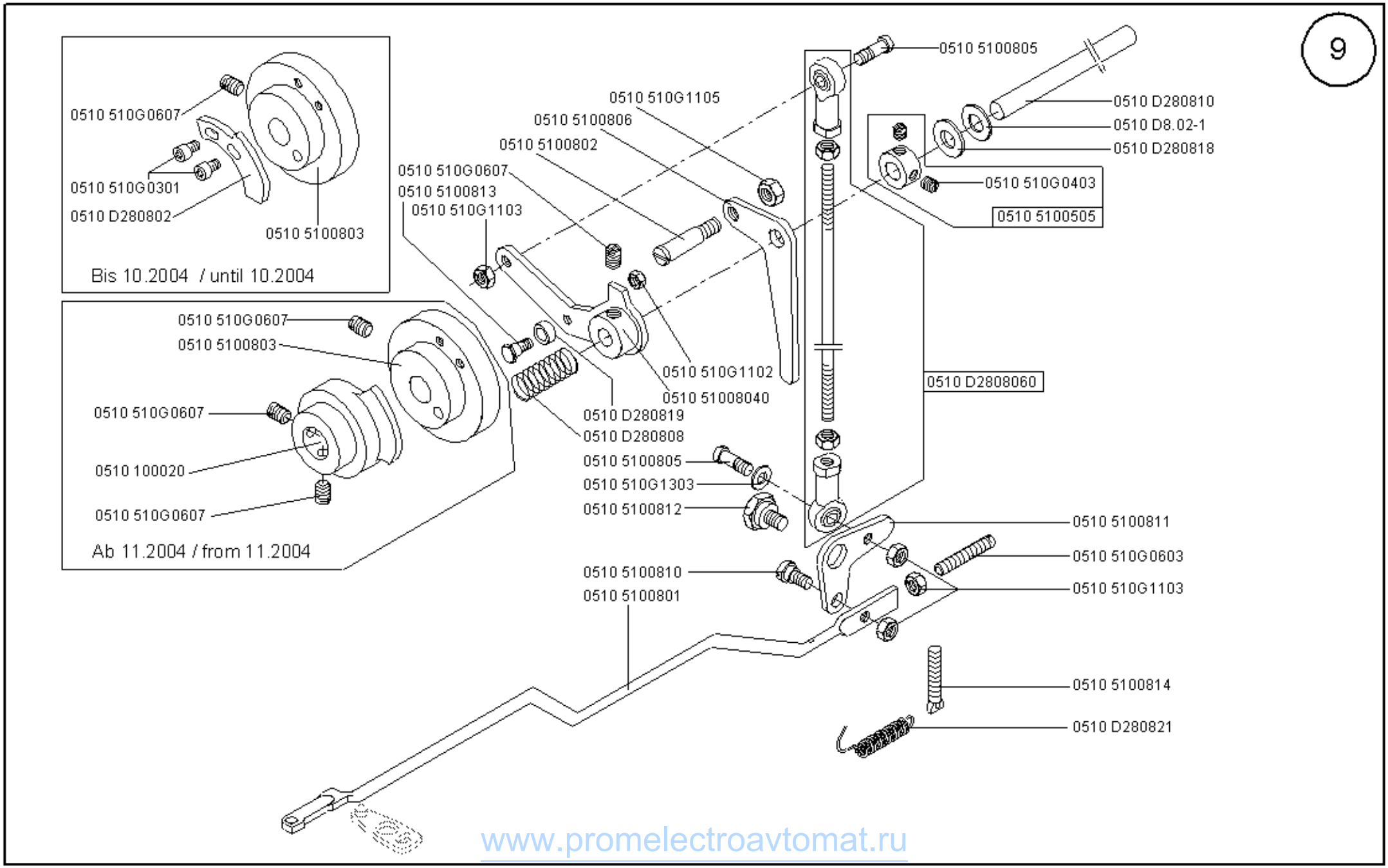

www.promelectroavtomat.ru

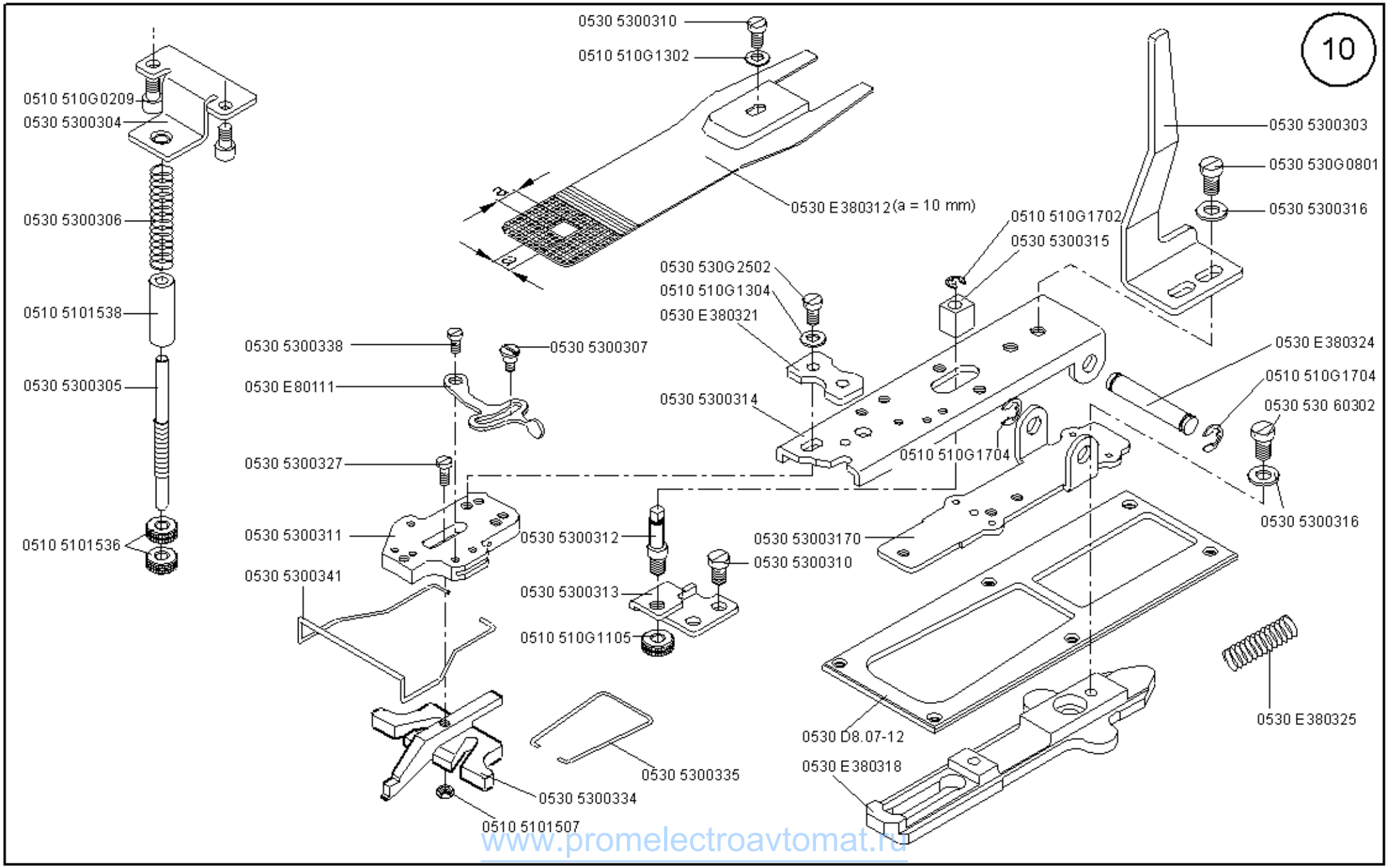

www.promelectroavtomat.ru

Scale 50 %

Cl. 530

Ausgabe/Edition 08.2007

Klammer *clamp*	F**	DA Klammer *	C** *(standard fiting)*	D**
Knopftyp *button type*	**sehr kleine Knöpfe** *very small buttons*	**flache Knöpfe** *flat buttons*	**mittlere Knöpfe** *medium sized buttons*	**große Knöpfe** *large buttons*
Knopfgröße *button size* mm	Ø 8 - 15	Ø 10 - 20	Ø 10 - 20	Ø 15 - 32
Knopfdicke *button height* mm	2,2	2,2	2,7	2,7

* **DA Klammer** ähnlich Juki - Klammer B / DA clamp similar to Juki clamp B

** Juki Bezeichnung / Juki descrition

	1 **Klammerfuß links** *Clamp left*	2 **Klammerfuß rechts** *Clamp right*
DA - clamp	0530 5300339Z	0530 5300340Z
C - clamp	0530 530-BA0501L	0530 530-BA0501R
D - clamp	0530 530-BA0506L	0530 530-BA0506R
F - clamp	0530 530-BA0507L	0530 530-BA0507R

1

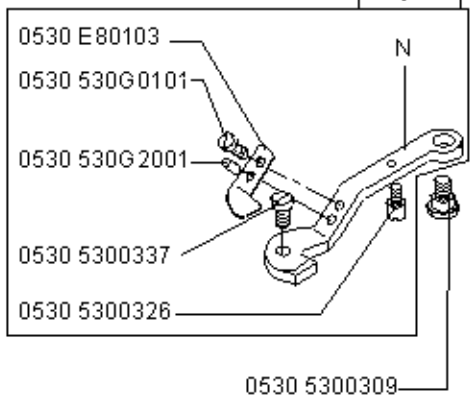

2

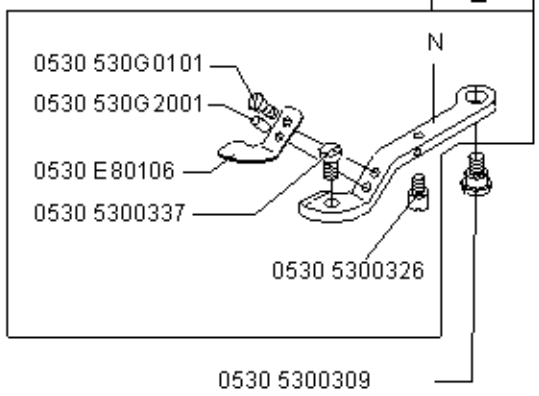

N- nicht als Einzelteil lieferbar
not available as separate part

www.promelectroavtomatika

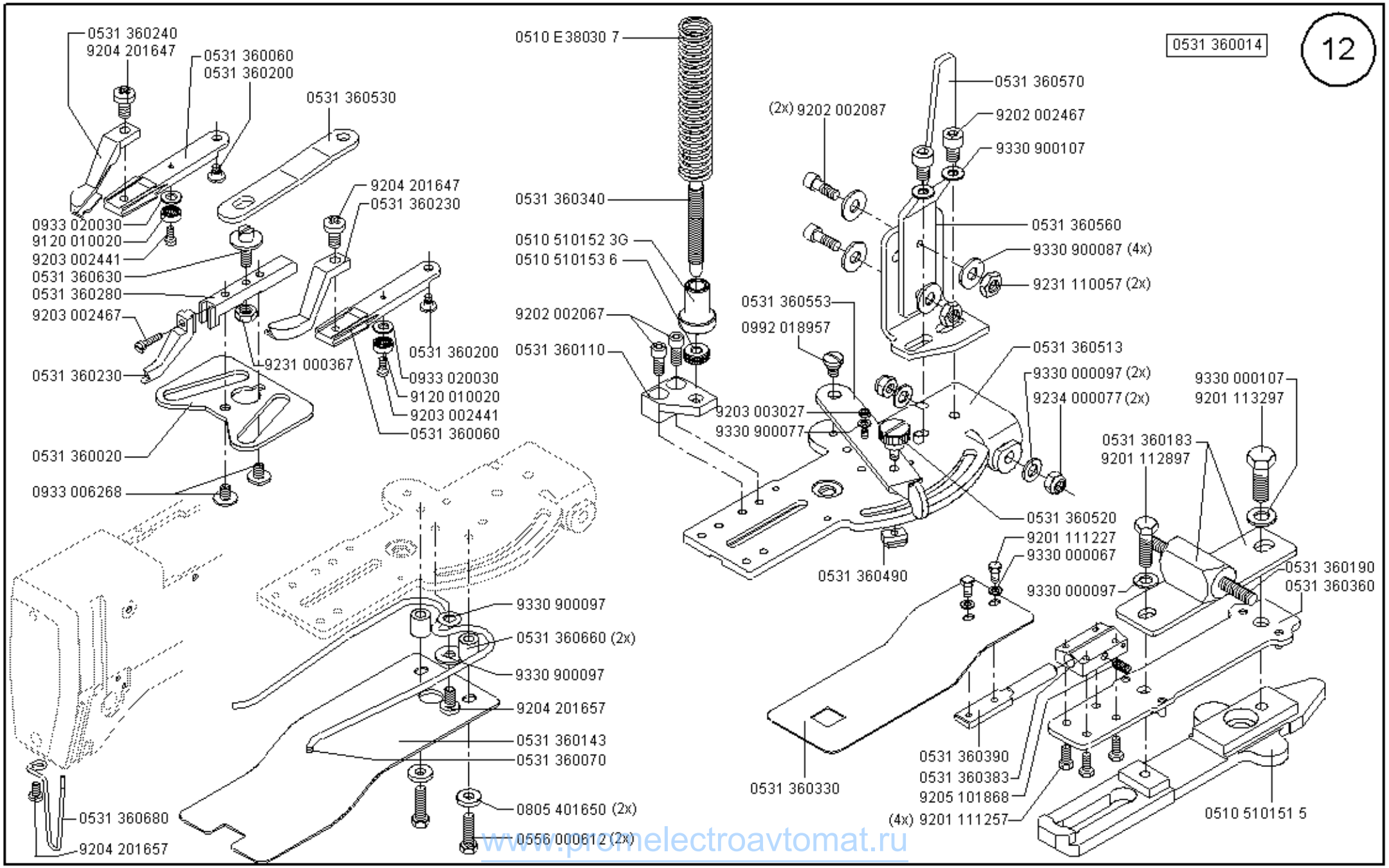

www.promelectroavtomat.ru

Scale 50 %

Cl. 530

Ausgabe/Edition 08.2007

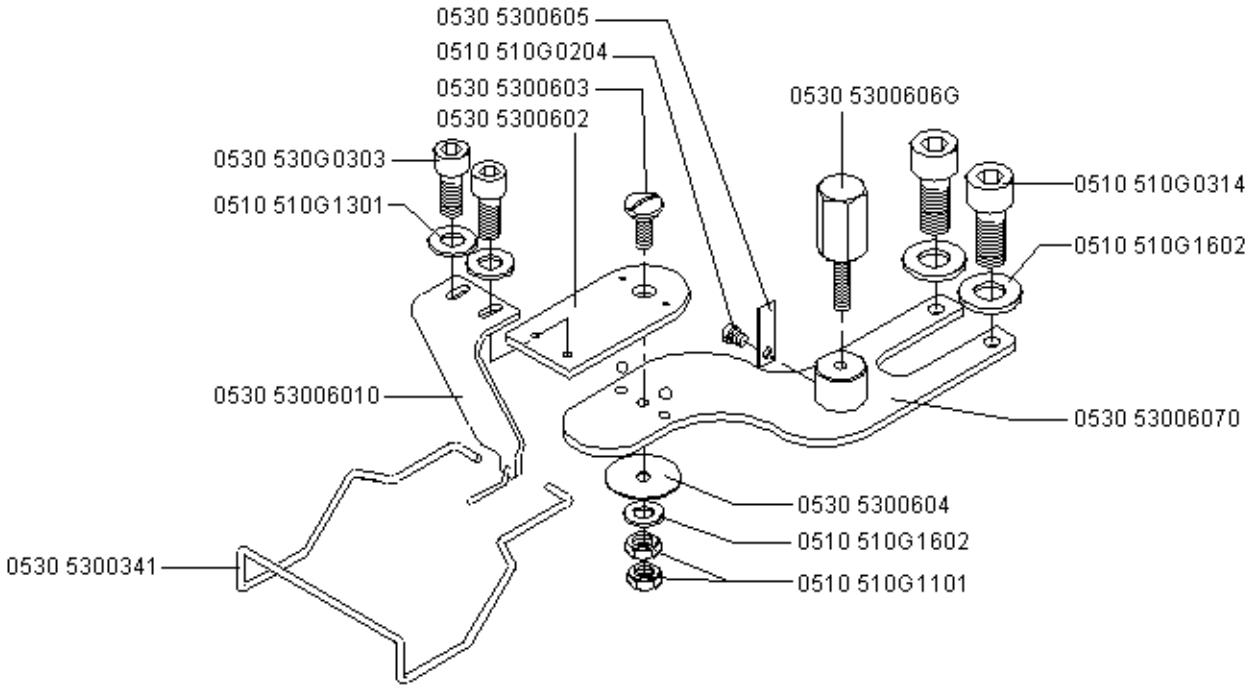

www.promelectroavtomat.ru

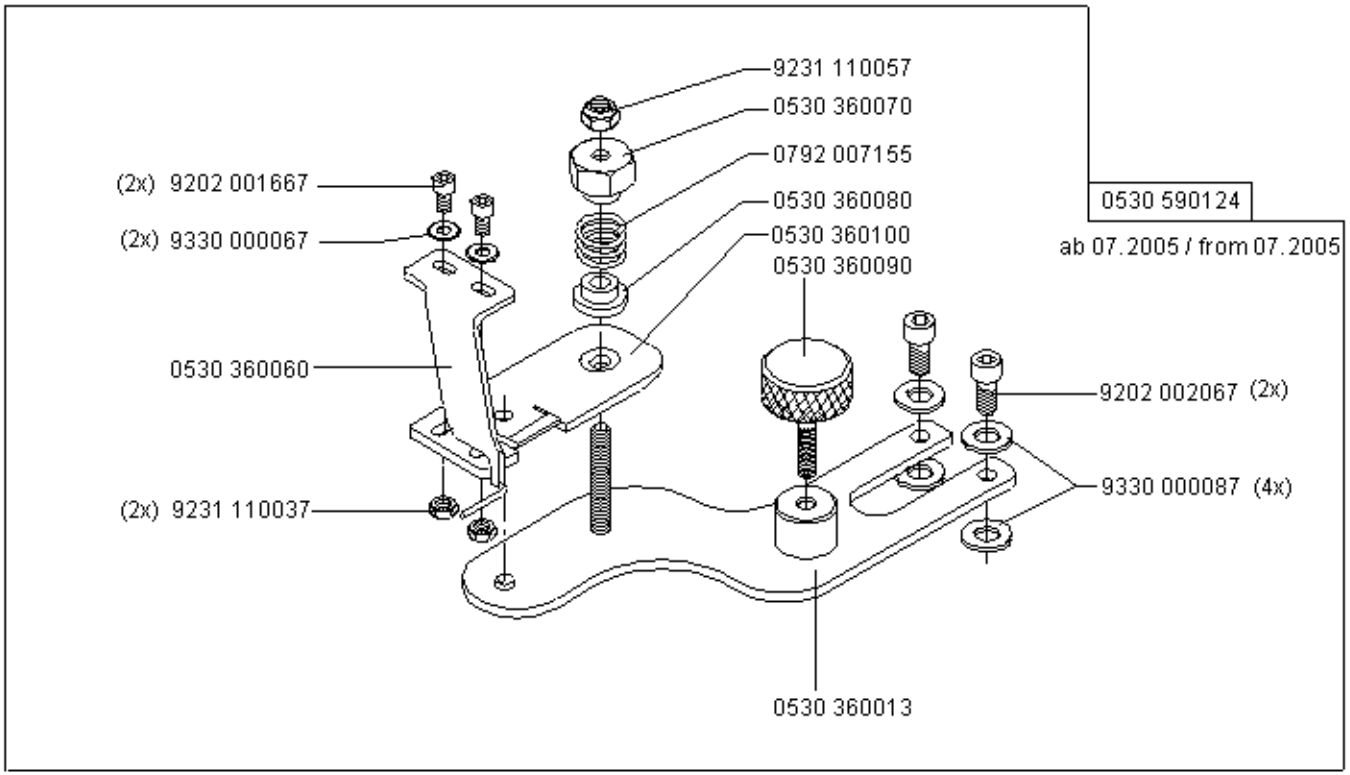

www.promelectroavtomat.ru

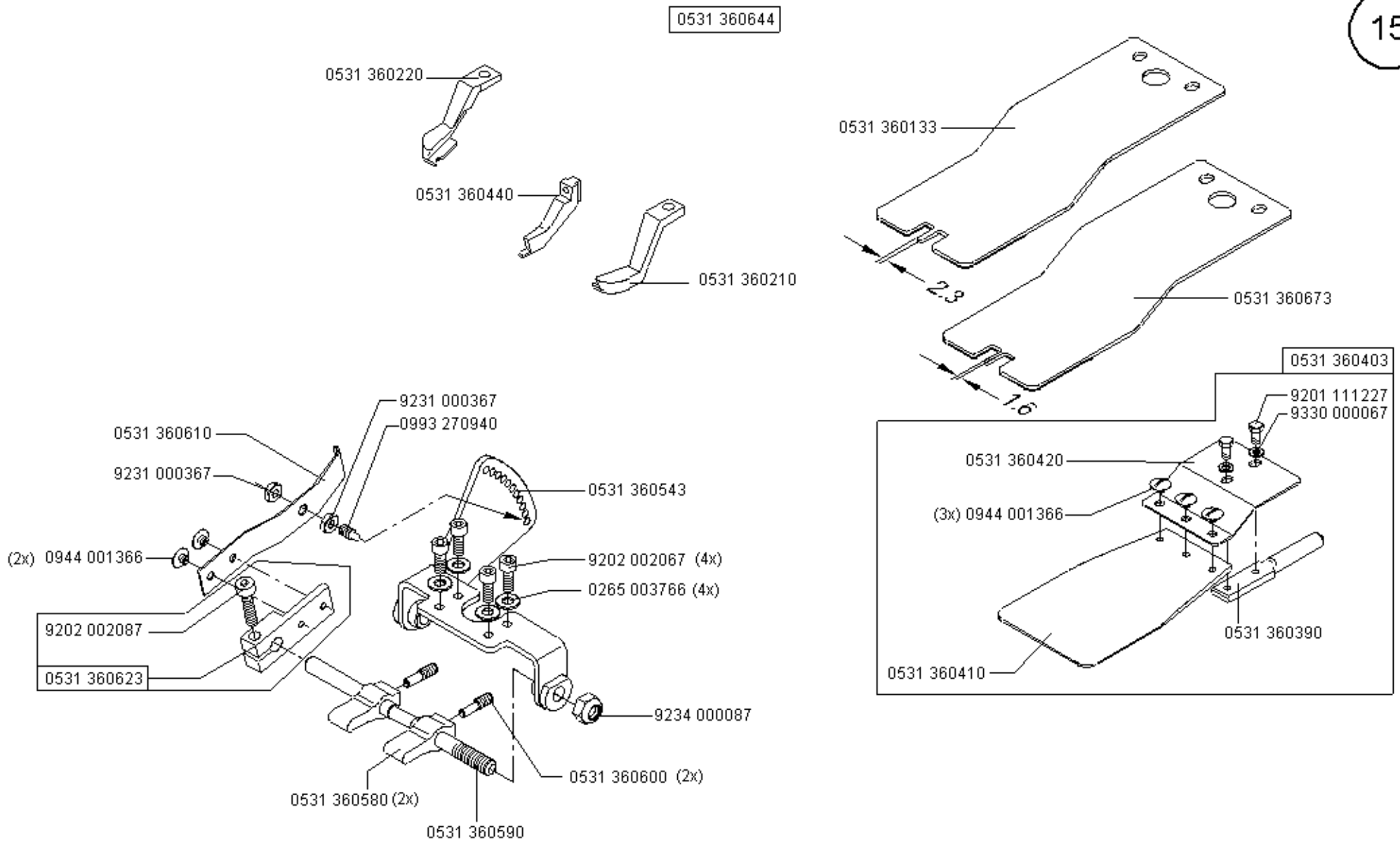

www.promelectroavtomat.ru

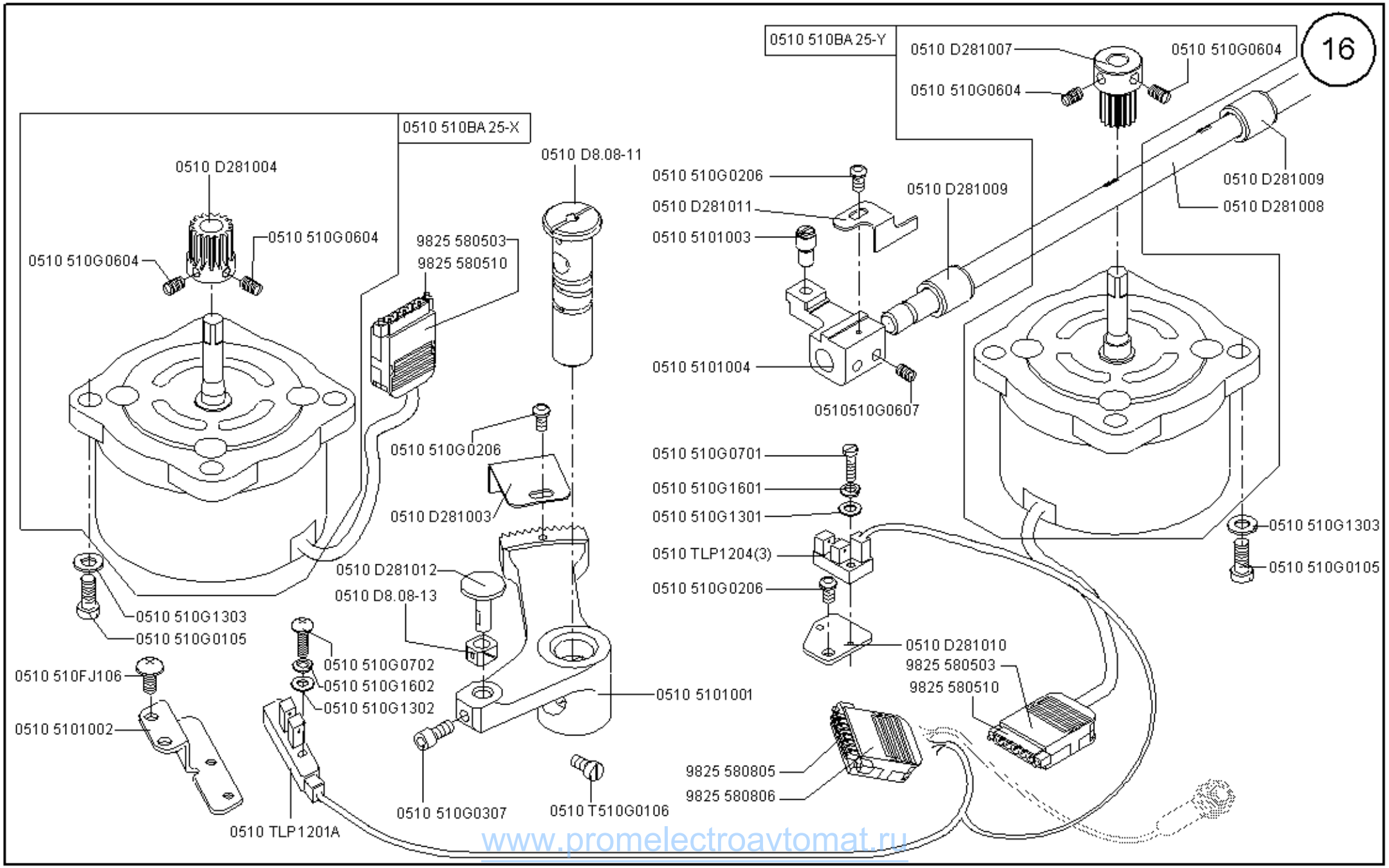

www.promelectroavtomat.ru

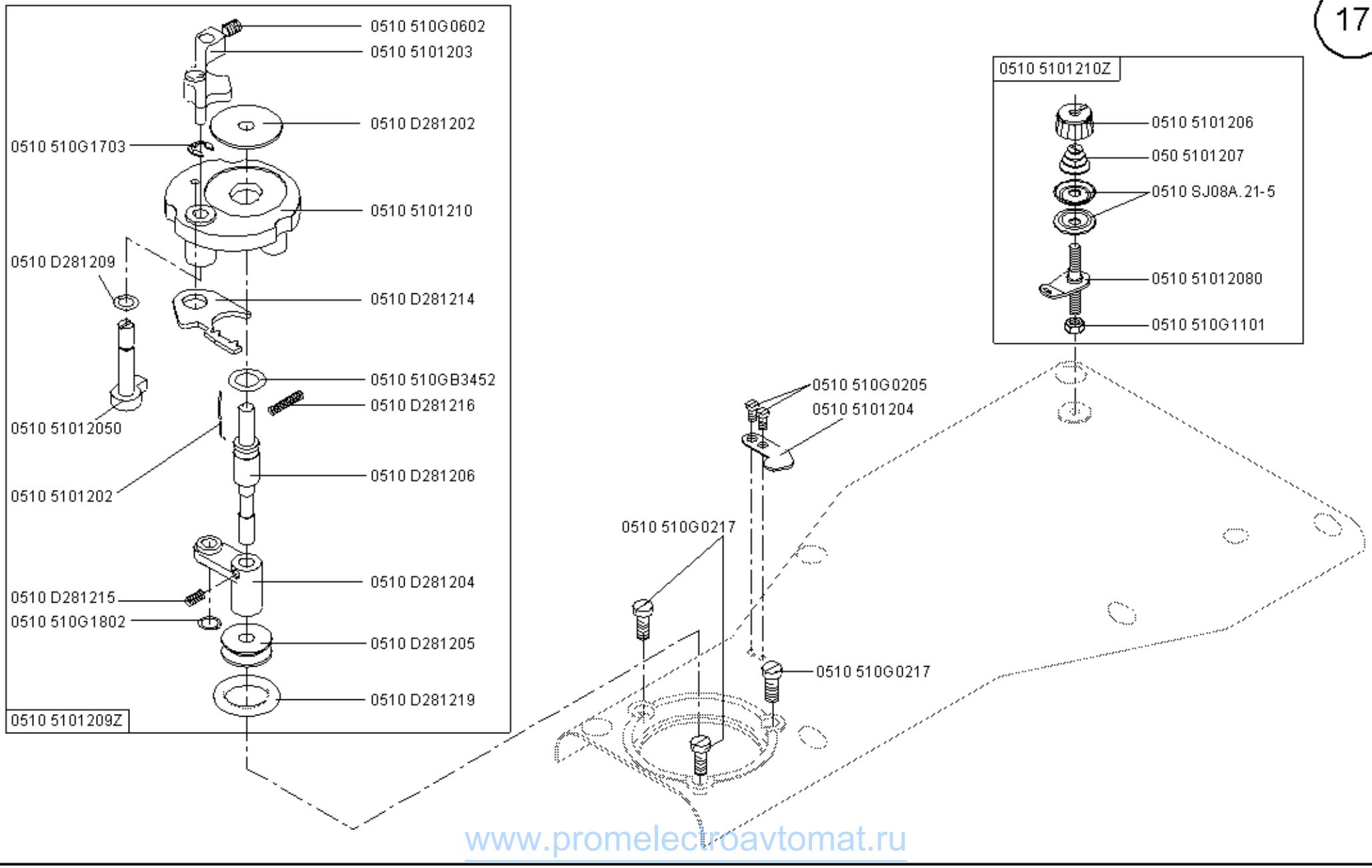

www.promelectroavtomat.ru

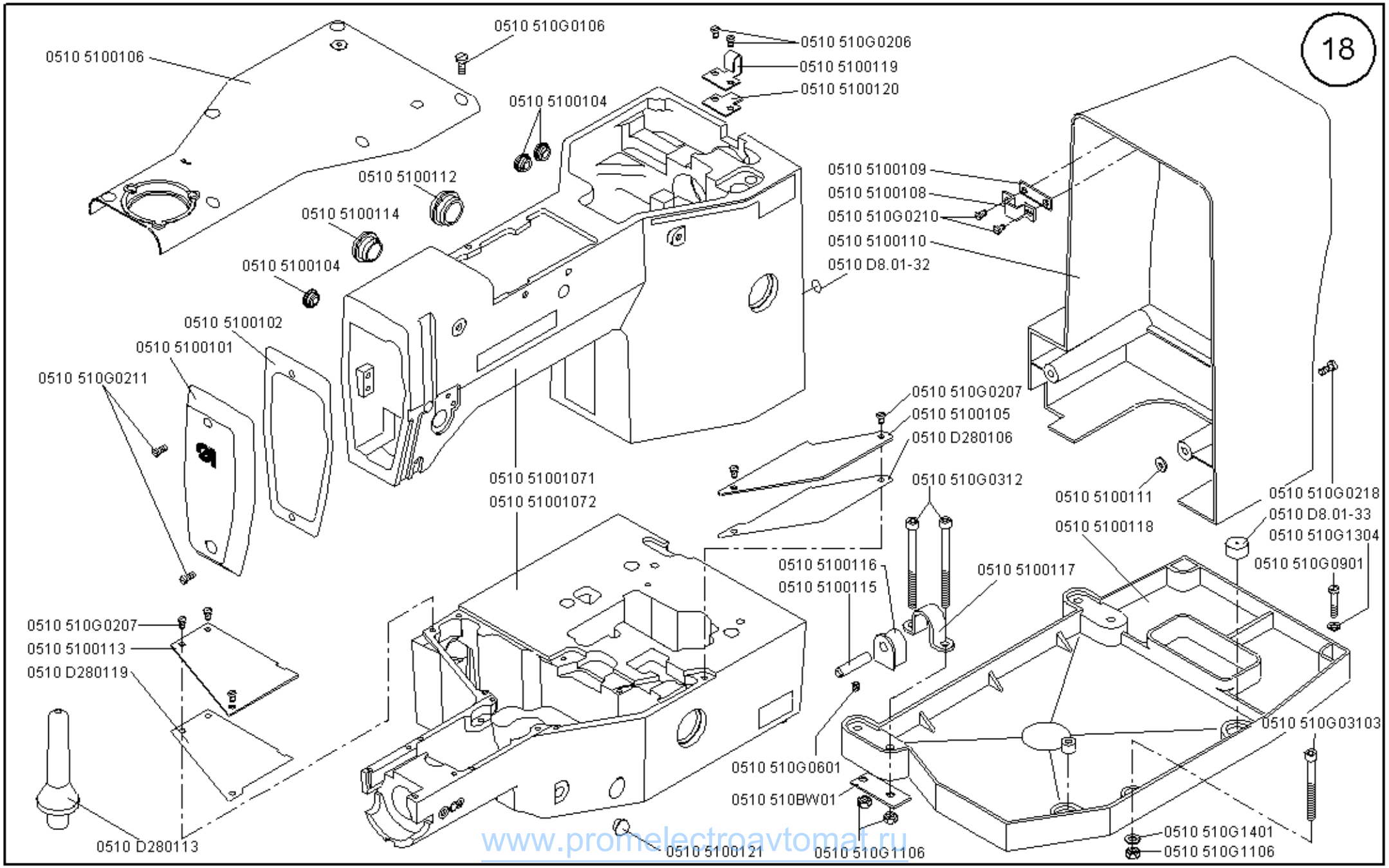

www.promelectroavtomat.ru

Scale 25 %

Cl. 530

Ausgabe/Edition 08.2007

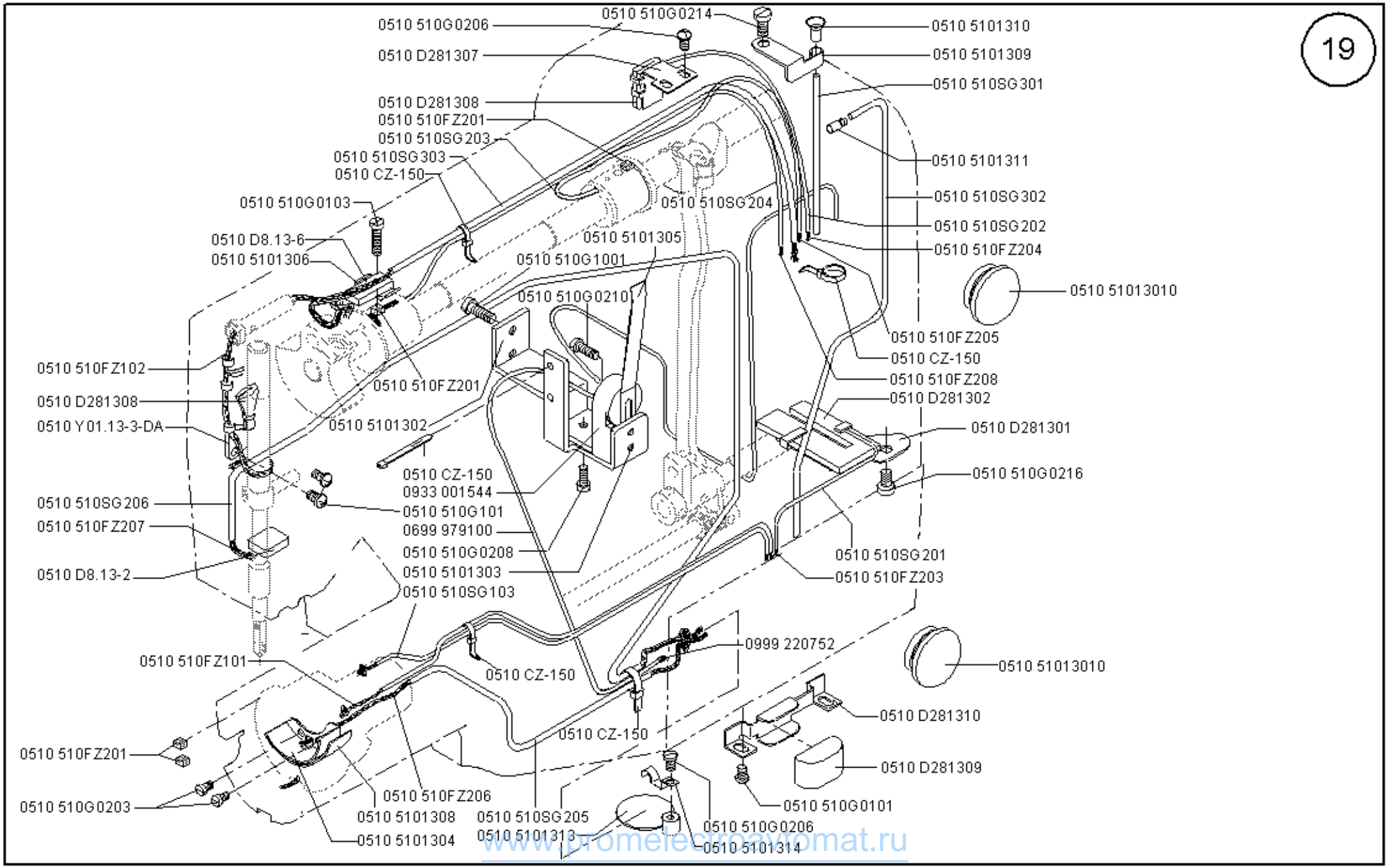

www.promelectroavtomat.ru

Scale 50 %

Cl. 530

Ausgabe/Edition 08.2007

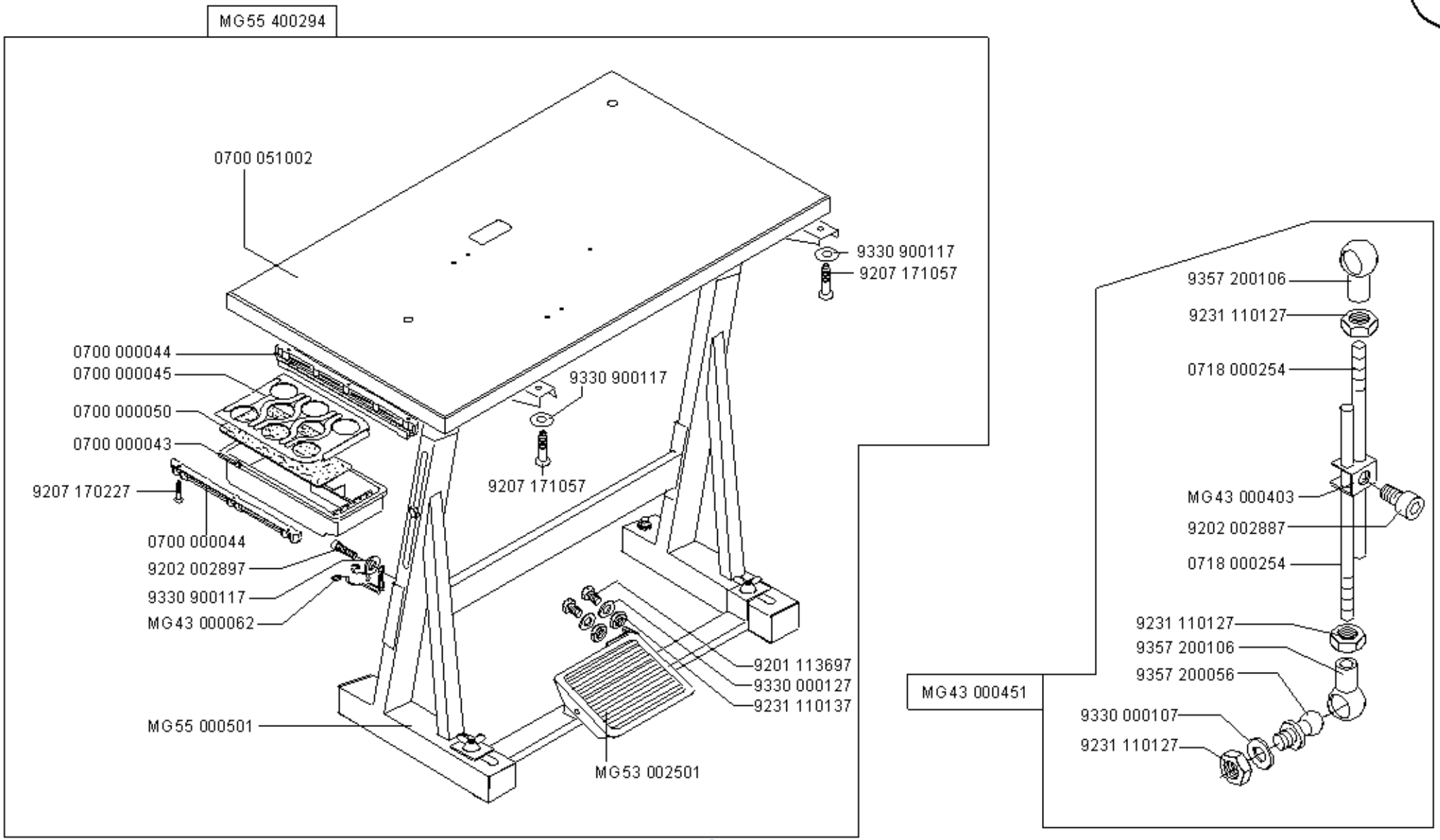

www.promelectroavtomat.ru

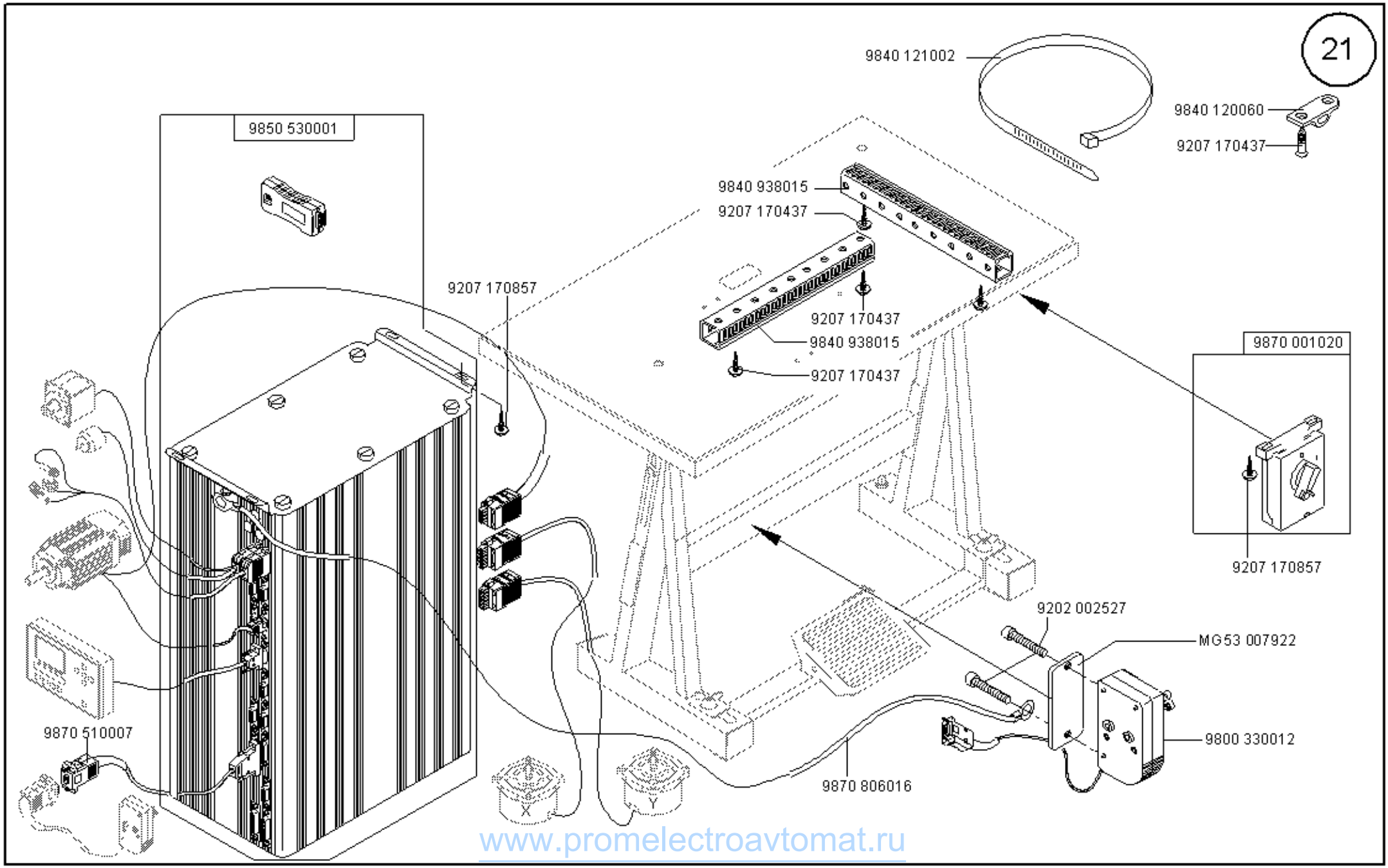

www.promelectroavtomat.ru

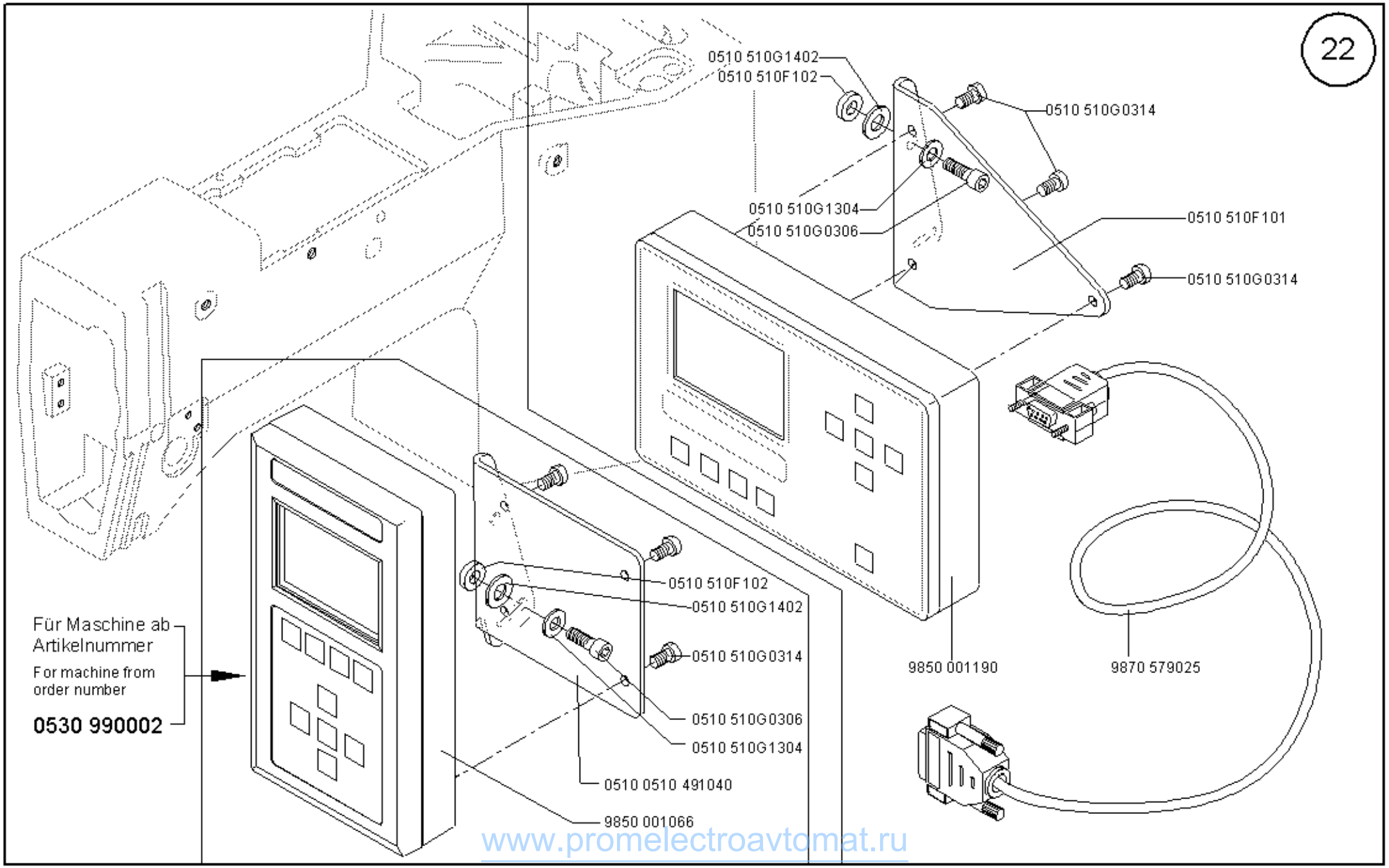

www.promelectroavtomat.ru

auf Wunsch
on request

0510 590054

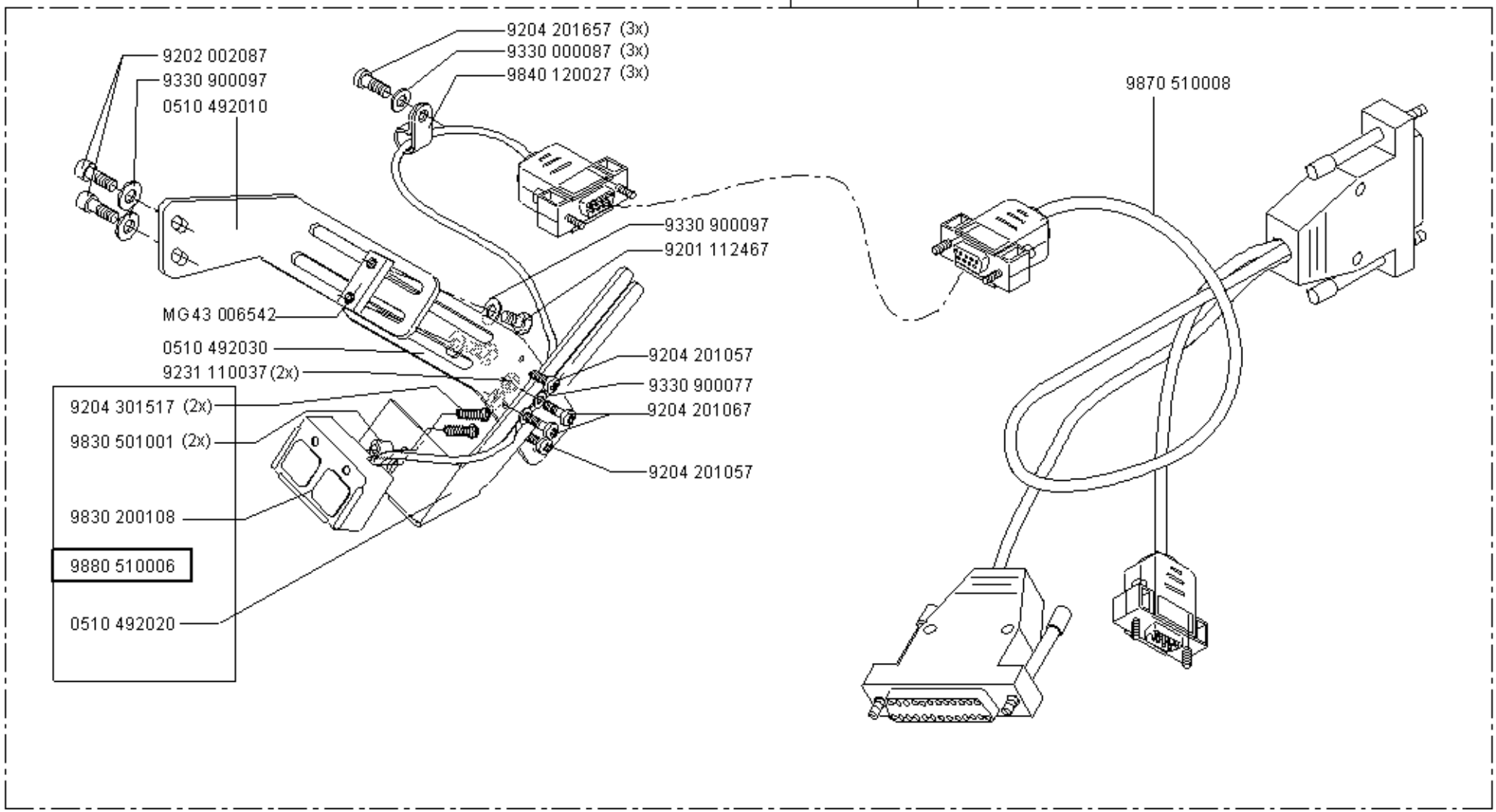

www.promelectroavtomat.ru

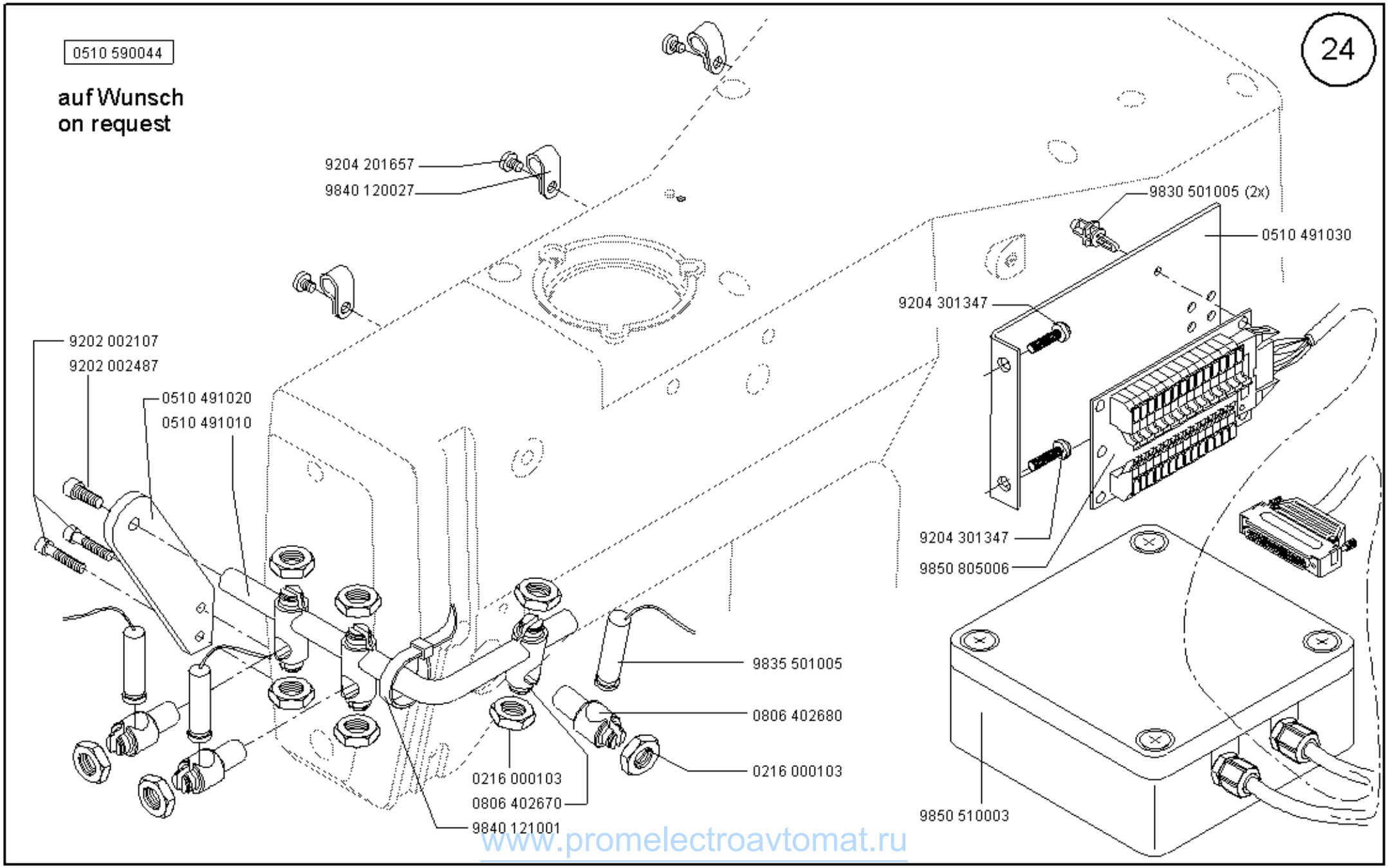

www.promelectroavtomat.ru

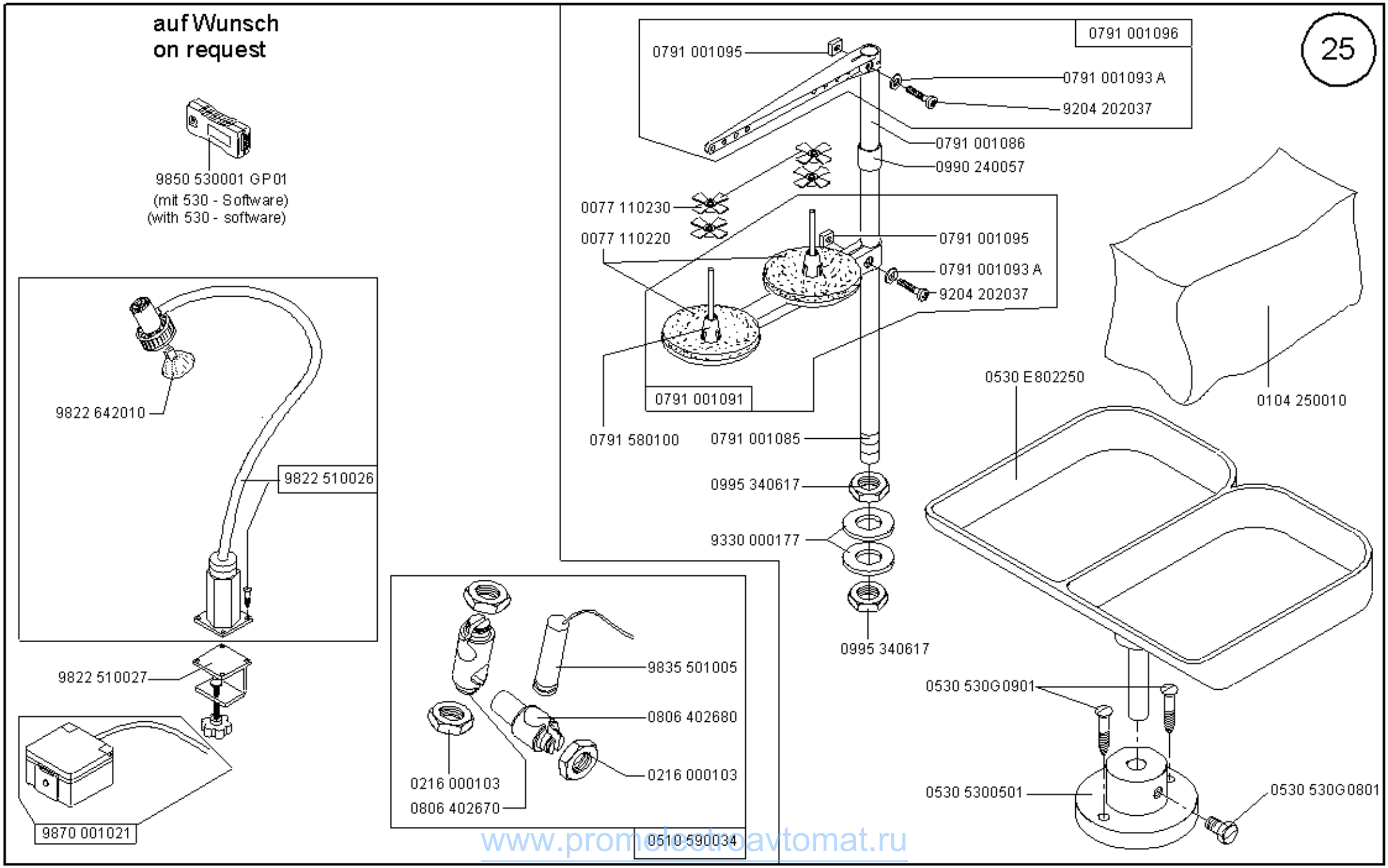

www.promelectroavtomat.ru

Teilenummer Part No.	Bezeichnung/Description D	GB	Seite Page
0077 110220	AUFLAGE	Filt	23
0077 110230	ZENTRIERSTUECK	Centering piece	23
0104 250010	HAUBE G5	Machine cover	23
0216 000103	6KT.MUTTER M10x1	Hexagonal nut M10	22, 23
0265 003766	6KT.MUTTER	Hexagonal nut	15
0510 100010	KURBEL	Crank	5
0510 100020	KURVENSCHEIBE	Thread trimmer cam	9
0510 150014	GREIFER K, GROSS	Hook, Large asm	5
0510 150020	TREIBER	Shuttle Driver	5
0510 150030	GREIFER	Inner Hook	5
0510 150040	SPULENKAPSEL	Bobbin case asm	5
0510 150050	SPULE	Bobbin	5
0510 1818-282-NOO		Inner Hook	5
0510 350014	FADENABSCHNEIDER K	Thread cutter asm	8
0510 350020	STICHPLATTE	Needle plate	8
0510 350033	FADENZIEHMESSER V	Moving knife	8
0510 350060	GEGENMESSER	Fixing knife	8
0510 350070	ANSATZSCHRAUBE	Hinge screw	8
0510 350080	KOPPEL	Moving knife link	7, 8
0510 350093	HEBEL V	Moving knife driving lever asm small	7, 8
0510 350123	HEBEL V	Moving knife driving lever asm large	7, 8
0510 350150	SCHEIBE	Moving knife washer	8
0510 350200	HUELSE	Collar	7, 8
0510 350210	ADAPTER	Thread cutter lever shaft	7, 8
0510 360120	FADENWISCHER	Thread wiper	3
0510 360130	SCHRAUBE SCHARNIER	Screw	3
0510 360140	WISCHERGLIED	Wiper connecting arm	3
0510 360150	WISCHERARM	Wiper hinge	3
0510 360160	MAGNETHALTER	Solenoid installing plate	3
0510 360170	FEDER	Spring	3
0510 360180	ANSATZSCHRAUBE	Screw	3
0510 360190	FADENWISCHERMAGNET	Solenoid	3
0510 360200	STOPFEN	Rubber plug	3
0510 360230	SCHALTFAHNE	Cam switch	3
0510 360260	ANSATZSCHRAUBE	Shoulder screw	3
0510 491010	BUEGEL	Holder	22
0510 491020	LASCHE	Clip	22
0510 491030	ADAPTERBLECH	Base plate	22
0510 491040	WINKEL	Panel connecting plate BF3	20
0510 492010	WINKEL	Installing base A	21
0510 492020	AUFNAHME	Retainer	21
0510 492030	HALTEARM	Installing base B	21
0510 5100101		Face plate asm.	16
0510 5100102		Face packing	16
0510 5100103		Balance cover	6
0510 5100104		Rubber plug	16
0510 5100105		Bed cover B	16
0510 5100106		Top cover	16
0510 51001071		Sewing arm	16
0510 51001072		Ground plate	16
0510 5100108		Connector plate	16
0510 5100109		Adjusting cushion	16
0510 5100110		Safety cover	16
0510 5100111		Rubber stopper	16
0510 5100112		Rubber plug	16
0510 5100113		Bed cover A	16
0510 5100114		Rubber plug	16
0510 5100115		Hinge stud	16

www.promelectroavtomat.ru

Teilenummer Part No.	Bezeichnung/Description D	GB	Seite Page
0510 5100116		Hinge rubber	16
0510 5100117		Bed hinge	16
0510 5100118		Oil pan asm.	16
0510 5100119		Spring plate	16
0510 5100120		Adjusting cushion	16
0510 5100121		Rubber plug	16
0510 5100201		Pulley	2
0510 5100202		Hand Pulley Gear B	2
0510 5100203	SCHRAUBE	Screw	2
0510 5100204		Counter weight	2
0510 5100205		Hand Pulley Gear A	2
0510 5100206		Main shaft	2
0510 5100207		Thrust collar asm	2
0510 5100208		Main motor connector	2
0510 51002090		Coupling Asm	2
0510 5100303		Neddle bar clamp	1
0510 5100305		Left screw	1
0510 5100308	NADELSTANGE	Needle bar	1
0510 5100310Z		Needle bar connecting asm	1
0510 5100401		Spring suspension	4
0510 5100402	FEDER	Spring	4
0510 5100403		Plate	4
0510 5100404	SCHRAUBE8x3.4	Screw 8x3.4	4
0510 5100406		Presser lifting shaft	4
0510 5100409		Thrust collar asm	4
0510 5100411		Hinge Screw 6.35x3.9	4, 6
0510 5100412		Lifting Link A	4
0510 5100413		Oil pump support	4
0510 5100414		Lifting Link B	4
0510 5100416		Lifting Link C	4
0510 51005010		Cylinder asm cap	5
0510 5100502		Hook cover presser spring A	5
0510 5100503		Hook cover presser spring B	5
0510 5100504		Shuttle	5
0510 5100505		Thrust collar asm D=3 W=8	5, 9
0510 5100506		Gear	5
0510 51005070		Crank rod asm	5
0510 51005071		Crank rod	5
0510 51005072		Rod cover	5
0510 5100508		Thrust collar asm D=12 W=10	5
0510 5100509		Inner hook presser Spring	5
0510 5100510		Shuttle race adjusting shaft	5
0510 5100511		Shuttle upper spring	5
0510 5100512		Shuttle Driver	5
0510 5100513		Thrust collar	5
0510 5100514		Oscillator	5
0510 5100515		Hinge screw 8x10.2	5
0510 5100517Z		Driver asm	5
0510 5100518Z		Shuttle asm	5
0510 5100602G		Wiper base plate	3
0510 5100701		Tesion release adjusting arm	6
0510 5100702		Suspension screw	6
0510 5100703	SCHRAUBE	Screw	6
0510 5100704		Tension nut	6
0510 5100705		No. 1 thread tension spring	6
0510 5100706		Thread tension rod no. 1	6
0510 5100707		Hinge Screw 6.35x4.8	6
0510 5100708		L-shaped thread guide A	6

www.promelectroavtomat.ru

Teilenummer Part No.	Bezeichnung/Description D	GB	Seite Page
0510 5100709		Hinge Screw	6
0510 5100710		Tension spring no. 2	6
0510 5100711		Tension release link	6
0510 5100711Z		No. 1 thread tension asm	6
0510 5100712	SCHRAUBE 5.3x2.2	Screw 5.3x2.2	6
0510 5100712Z		No. 2 thread tension asm	6
0510 5100713		Thread guide	6
0510 5100714		Take up spring	6
0510 51007150		Thread tension nut A	6
0510 5100716		Tension spring no. 2	6
0510 5100717		Thread tension rod large	6
0510 5100718		Thread tension rod no. 2	6
0510 5100719		Take up spring	6
0510 5100720	SCHEIBE	Washer	6
0510 5100801		Connecting bar	9
0510 5100802		Tension release arm pin	9
0510 5100803		Thread trimmer cam no. 1	9
0510 51008040		Cam follower asm.	9
0510 5100805		Hinge screw 5x8	9
0510 5100806		Thread release arm	9
0510 5100807		Cam Follower stopper	7
0510 5100808		Solenoid pin	7
0510 5100809		Hinge screw 7.94x3.1	7
0510 5100810		Hinge screw 6.5x3	9
0510 5100811		Thread trimmer link	9
0510 5100812		Hinge screw 11x3	9
0510 5100813		Roller shaft screw	9
0510 5100814		Tension spring adjusting screw	9
0510 5100815		Solenoid installing base	7
0510 5100816		Solenoid for thread trimming	7
0510 5100816Z		Tread trimming solenoid asm	7
0510 5100901		Needle Plate	7
0510 5100902		Hinge screw	7
0510 5100905Z		Thread cutter asm.	7
0510 5101001		X feed arm	14
0510 5101002		X feed sensor installing base	14
0510 5101003		Bushing rear	14
0510 5101004		Y feed arm	14
0510 5101105	MUTTER	Nut	2
0510 5101210		Bobbin fitting basis compl.	15
0510 5101202		Latch spring	15
0510 5101203		Bobbin lever	15
0510 5101204		Thread cutter	15
0510 51012050		Bobbin cam shaft compl.	15
0510 5101206		Thread tension nut	15
0510 5101207		Thread tension spring	15
0510 51012080		Thread tension rod compl.	15
0510 5101209Z		Bobbin winder asm.	15
0510 5101210Z		Bobbin thread tension asm.	15
0510 51013010		Oil Gauge	17
0510 5101302		Oil pump support	17
0510 5101303		Oil pump base	17
0510 5101304		Shuttle lubricating plate	17
0510 5101305		Oil pump lever	17
0510 5101306		Balance lubricating plate	17
0510 5101308		Shuttle felt	17
0510 5101309		Oil pour guide fixer	17
0510 5101310	TRICHTER	Funnel	17

www.promelectroavtomat.ru

Teilenummer Part No.	Bezeichnung/Description D	GB	Seite Page
0510 5101311	SCHLAUCH	Hose	17
0510 5101313		Oil suction felt	17
0510 5101314		Filter clip	17
0510 5101401		Safety Plate Installing Base	1
0510 5101402		Tension Spring Rack	1
0510 5101403		Safety Plate Return Spring	1
0510 5101404		Hince Screw 6X11	1
0510 51014050		Safety Plate Installing Plate	1
0510 5101507	MUTTER	Nut	10
0510 510151 5	RIEGELKLAMMERAUFLAGEPLATTE	Feed plate	12
0510 510152 3G	DRUCKHUELSE	Presser sleeve	12
0510 5101536		Thread tension post nut	10, 12
0510 5101538		Bushing	10
0510 510BW01	PLATTE	Plate	16
0510 510F101		Panel connecting plate BF2	20
0510 510F102		Rubber ring	20
0510 510F103		Holder sensor	2
0510 510F104		180° plate	2
0510 510FJ101	SCHRAUBE M4X6	Screw M4x6	1
0510 510FJ102	SCHRAUBE M4X4	Screw M4x4	7, 8
0510 510FJ103	SCHRAUBE M4X6	Screw M4x6	6
0510 510FJ104	SCHRAUBE M4X5	Screw M4x5	5
0510 510FJ105	SCHRAUBE M4x10.5	Screw M4x10.5	5
0510 510FJ106	SCHRAUBE M5X6	Screw M5x6	14
0510 510FJ202	SCHRAUBE	Screw	7
0510 510FJ30	SCHRAUBE M2,5x2,2	Screw M2,5x2,2	7
0510 510FJ301	SCHRAUBE M2,5x2,2	Screw M2,5x2,2	8
0510 510FJ302	SCHRAUBE M4x5,5	Screw M4x5,5	7, 8
0510 510FJ501	MUTTER 1/4x40	Nut 1/4x40	7
0510 510FJ502	MUTTER 1/4x40	Nut 1/4x40	7
0510 510FZ101	OELDOCHT	Oil wick	17
0510 510FZ102	OELDOCHT	Oil wick	17
0510 510FZ201	OELDOCHT	Oil wick	17
0510 510FZ203	OELDOCHT	Oil wick	17
0510 510FZ204	OELDOCHT	Oil wick	17
0510 510FZ205	OELDOCHT	Oil wick	17
0510 510FZ206	OELDOCHT	Oil wick	17
0510 510FZ207	OELDOCHT	Oil wick	17
0510 510FZ208	OELDOCHT	Oil wick	17
0510 510G0101	SCHRAUBE M4X6	Screw M4x6	7, 8
0510 510G0102		Screw M4x8	6
0510 510G0103		Screw M4x15	17
0510 510G0104		Screw M5x5	4
0510 510G0106		Screw M6x12	5
0510 510G0106		Screw M6x12	5, 16
0510 510G0201		Screw M2.5x3	5
0510 510G0203		Screw M3x4	17
0510 510G0204		Screw M3x3	1
0510 510G0205		Screw M3x6	15
0510 510G0206		Screw M4x6	7
0510 510G0206		Screw M4x6	14, 16, 17
0510 510G0207		Screw M4x6	6, 16
0510 510G0208		Screw M4x8	4, 17
0510 510G0209		Screw M4x8	1, 6, 10
0510 510G0210		Screw M4x10	16, 17
0510 510G0211		Screw M4x10	16
0510 510G0212		Screw M5x6	7
0510 510G0214		Screw M5x8	2, 4, 7, 17

www.promelectroavtomat.ru

Teilenummer Part No.	Bezeichnung/Description D	GB	Seite Page
0510 510G0216		Screw M5x10	6, 7, 17
0510 510G0217		Screw M5x12	5, 15
0510 510G0218		Screw M5x12	16
0510 510G0219		Screw M6x8	6
0510 510G0220		Screw M6x12	4
0510 510G0301		Screw M4x6	9
0510 510G0303		Screw M4x12	2
0510 510G0304	SCHRAUBE M5x12	Screw M5x12	5
0510 510G0305	SCHRAUBE M5x15	Screw M5x15	2
0510 510G0306	SCHRAUBE	Screw	20
0510 510G0307	SCHRAUBE M6x10	Screw M6x10	14
0510 510G0308	SCHRAUBE M6x12	Screw M6x12	2
0510 510G0309	SCHRAUBE M6x18	Screw M6x18	4
0510 510G03103	SCHRAUBE M6x60	Screw M6x60	16
0510 510G0311	SCHRAUBE M6x25	Screw M6x25	2
0510 510G0312		Hexagonal hole bolt M6x80	16
0510 510G0314	SCHRAUBE	Screw	12, 20
0510 510G0402	SCHRAUBE M5x4	Screw M5x4	2, 5
0510 510G0403	SCHRAUBE M5x5	Screw M5x5	2
0510 510G0405	SCHRAUBE M6x6	Screw M6x6	2
0510 510G0406	SCHRAUBE M6x0.75x6	Screw M6x0.75x6	2, 5
0510 510G0501	SCHRAUBE M3x6	Screw M3x6	6
0510 510G0601	SCHRAUBE M5x5	Screw M5x5	9, 16
0510 510G0602	SCHRAUBE M5x6	Screw M5x6	15
0510 510G0603	SCHRAUBE M5x30	Screw M5x30	9
0510 510G0604	SCHRAUBE M6x6	Screw M6x6	14
0510 510G0605	SCHRAUBE M6x8	Screw M6x8	4, 5
0510 510G0606	SCHRAUBE	Screw	6
0510 510G0607	SCHRAUBE M6x0.75x8	Screw M6x0.75x8	2, 9, 14
0510 510G0701	SCHRAUBE M3x12	Screw M3x12	14
0510 510G0702	SCHRAUBE M4x12	Screw M4x12	14
0510 510G0801	SCHRAUBE M6x0.75x14	Screw M6x0.75x14	2
0510 510G0901		Tapping screw	16
0510 510G1001	SCHRAUBE M5x12	Screw M5x12	17
0510 510G101	SCHRAUBE M4X6	Screw M4x6	17
0510 510G1101	MUTTER M4	Nut M4	1, 6, 7, 12, 15
0510 510G1102	MUTTER M4	Nut M4	9
0510 510G1103	MUTTER M5	Nut M5	6, 9
0510 510G1104	MUTTER M5	Nut M5	1
0510 510G1105	MUTTER M6	Nut M6	9, 10
0510 510G1106	MUTTER M6	Nut M6	16
0510 510G1107	MUTTER M6x0.75	Nut M6x0.75	5
0510 510G1202	SCHEIBE	Washer	4
0510 510G1301	SCHEIBE 3	Washer 3	12, 14
0510 510G1302	SCHEIBE 4	Washer 4	1, 10, 14
0510 510G1303	SCHEIBE 5	Washer 5	9, 14
0510 510G1304	SCHEIBE 5	Washer 5	10, 16, 20
0510 510G1305	SCHEIBE	Washer	2
0510 510G1401	SCHEIBE 6	Washer 6	16
0510 510G1402	SCHEIBE	Washer	20
0510 510G1601		Spring washer 3	14
0510 510G1602		Spring washer 4	12, 14
0510 510G1702		E-Ring 4	7, 10
0510 510G1703		E- Ring 5	15
0510 510G1704		E-Ring 6	10
0510 510G1705		E-Ring 9	5
0510 510G1802		Retaining ring	15
0510 510G1901		Pin	5

www.promelectroavtomat.ru

Teilenummer Part No.	Bezeichnung/Description D	GB	Seite Page
0510 510G2001		Hook cover presser spring Pin	5
0510 510G204	SCHRAUBE	Screw	12
0510 510G2101		Spring Pin 2x6	1
0510 510G2102		Spring Pin 4x14	2
0510 510G2801	SCHRAUBE	Screw	2
0510 510GB3452		Rubber ring	15
0510 510SG103	SCHLAUCH-PVC	Vinyl pipe	17
0510 510SG201	SCHLAUCH-PVC	Vinyl pipe	17
0510 510SG202	SCHLAUCH-PVC	Vinyl pipe	17
0510 510SG203	SCHLAUCH-PVC	Vinyl pipe	17
0510 510SG204	SCHLAUCH-PVC	Vinyl pipe	17
0510 510SG205	SCHLAUCH-PVC	Vinyl pipe	17
0510 510SG206	SCHLAUCH-PVC	Vinyl pipe	17
0510 510SG301	SCHLAUCH-PVC	Vinyl pipe	17
0510 510SG302	SCHLAUCH-PVC	Vinyl pipe	17
0510 510SG303	SCHLAUCH-PVC	Vinyl pipe	17
0510 51OG1701		E-Ring 3	5
0510 590034	LASER-ERG.LEUCHTE K	Laser marking lamp asm. (add.)	23
0510 590044	LASERMARKIERUNG K	Laser marking lamp asm.	22
0510 590054	HANDTASTER K	Hand push button asm.	21
0510 590104	FADENSWISCHER K EL.	Electronic wiper asm.	3
0510 590154	FADENWISCHER K.	Thread wiper	3
0510 6302NR.ZZ		Upper shaft rear bearing	2
0510 510BA25-X		X feed stepping motor	14
0510 510BA25-Y		Y feed stepping motor	14
0510 D816-3;12		Moving knife	7
0510 D816-6		Fixing knife	7
0510 CZ-150	KABELBINDER	Cable tie	17
0510 D280106		Bed cover packing B	16
0510 D280113		Frame support bar	16
0510 D280119		Bed cover packing A	16
0510 D280202		Handwheel setscrew	2
0510 D280204	FEDER	Spring	2
0510 D280205		Pulley shaft	2
0510 D280207		Main shaft front bushing	2
0510 D280208A		Bobbin winder driving wheel	2
0510 D280211		Main shaft center wheel	2
0510 D280220		Cushion	2
0510 D2804110		Presser lifting solenoid asm	4
0510 D280412		Lifting Link D	4
0510 D280419		Magnet pin	4
0510 D280420		Split pin	4
0510 D2804210		Rubber bush	4
0510 D280422		Location plate	4
0510 D280502		Inner hook presser asm	5
0510 D280504		Shuttel driver shaft	5
0510 D280506		Oscillating eccentric shaft	5
0510 D280510		Inner Hook presser asm	5
0510 D280511		Bobbin case asm	5
0510 D280514	SCHEIBE	Washer	5
0510 D280515		Bobbin	5
0510 D280516		Lower shaft thrust washer	5
0510 D280517		Inner hook presser asm	5
0510 D280703		Pressure spring	6
0510 D280704		Adjusting arm stopper	6
0510 D280705		Thread guide no. 1	6
0510 D280710		Tension release connecting rod	6
0510 D280711G		Tension release pin	6

www.promelectroavtomat.ru

Teilenummer Part No.	Bezeichnung/Description D	GB	Seite Page
0510 D280802		Tension release notch	9
0510 D2808060		Connecting rod	9
0510 D280808	FEDER	Spring	9
0510 D280810		Thread trimmer shaft	9
0510 D280813		Solenoid arm	7
0510 D280817	SCHEIBE	Washer	7
0510 D280818		Clothplate washer	9
0510 D280819		Roller	9
0510 D280821		Thread trimmer link spring	9
0510 D280823		Spring	7
0510 D281003		X feed sensor slit	14
0510 D281004		X feed gear	14
0510 D281007		Y feed gear	14
0510 D281008		Y feed shaft	14
0510 D281009		Hinge stud	14
0510 D281010		Y feed sensor installing base	14
0510 D281011		Y feed sensor slit	14
0510 D281012		Slide block stud	14
0510 D281202		Cushion	15
0510 D281204		Bobbin winder spindle bushing	15
0510 D281205		Bobbin wider	15
0510 D281206		Bobbin winder spindle	15
0510 D281209		Vertical roller washer	15
0510 D281214		Adjusting plate	15
0510 D281215		Spring	15
0510 D281216		Presser foot spring	15
0510 D281219		Rubber ring	15
0510 D281301		Driver shaft oil shield	17
0510 D281302	OELFILZ	Oil felt	17
0510 D281307		Crank rod oil shield	17
0510 D281308		Needle rod crank lubricating	17
0510 D281309		Oil shield felt	17
0510 D281310		Felt presser	17
0510 D8.01-32		Groung mark	16
0510 D8.01-33		Rubber cushion	16
0510 D8.02-1		needle rod crank washer	6
0510 D8.02-1		Neddle rod crank washer	9
0510 D8.02-1		Needle rod chank washer	2
0510 D8.05-10		Rotating stopper	6
0510 D8.05-15		Thread tension disk	6
0510 D8.05-22		Thread guide plate	6
0510 D8.05-23		Arm thread guide B	6
0510 D8.05-24		Arm thread guide A	6
0510 D8.05-4		Tension release bar	6
0510 D8.05-6		Thread tension arm	6
0510 D8.05-8		Thread tension disk presser	6
0510 D8.08-11		Feed driving arm shaft	14
0510 D8.08-13		Square block B	14
0510 D8.13-2	OELFILZ	Oil felt	17
0510 D8.13-6		Balance lubrication	17
0510 D8.14-4-DA		Shuttle needle outer ring	5
0510 D8.14-5	SCHEIBE	Washer	5
0510 D8.14-9-DA		Lower shaft rear metal	5
0510 D8.15-1		Needle rod metal	1
0510 D8.19-1		Safety Plate	1
0510 D8.21-20		Shaft block	4
0510 D8-15-12		Square block	1
0510 D816-13		Moving knife washer	7

www.promelectroavtomat.ru

Teilenummer Part No.	Bezeichnung/Description D	GB	Seite Page
0510 DGJ-2		Cable clip	7
0510 DKS081110		Needle driving lever bearing	1, 5
0510 DKS081208		Needle bushing	1
0510 E380207		Needle bar thread guide	1
0510 E380307	DRUCKFEDER	Presser spring	12
0510 E380342		Collar	4
0510 E380343	SCHEIBE	Washer	4
0510 F80120		Rubber plug	3
0510 JD01		Solenoid rubber	7
0510 SJ08.A18-8	SCHEIBE	Washer	6
0510 SJ08A.21-5		Bobbin winder tension disc	15
0510 T510G0106	SCHRAUBE M6x12	Screw M6x12	14
0510 TLP1201A		Sensor	14
0510 TLP1204(3)		Photo sensor	14
0510 Y01.06-1		Tension disk presser tube	6
0510 Y01.13-3-DA		Oil wick presser	17
0511 360240	WISCHER	Wiper	
0511 360260	WISCHERARM	Wiper arm	3
0511 360270	KOPPEL	Connecting rod	3
0530 360013	STELLPLATTE V	Plate	13
0530 360060	STIELBILDNER	Shank device	13
0530 360070	MUTTER	Nut	13
0530 360080	BUCHSE	Bushing	13
0530 360090	RAENDELSCHRAUBE	Knurled screw	13
0530 360100	AUFNAHME	Fixing plate	13
0530 530 G2001		Pin	11
0530 53002010		Thread Take-up lever	1
0530 5300202		Needle bar crank rod	1
0530 5300203		Thread shaft	1
0530 5300204	SCHRAUBE	Screw	1
0530 5300205		Needle rod crank	1
0530 5300206		Neddle rod lower metal	1
0530 5300207	STICHLOCHEINSATZ 1,6	Needle hole guide 1.6	8
0530 5300207Z		Link Balance Asm	1
0530 5300208	STICHLOCHEINSATZ 2,0	Needle hole guide 2.0	8
0530 5300301		Presser solenoid link	4
0530 5300302		Connecting Arm	4
0530 5300303		Work clamp foot lifting plate	10
0530 5300304		Work clamp foot spring holder	10
0530 5300305		Presser shaft	10
0530 5300306		Presser spring	10
0530 5300307	SCHRAUBE	Screw	10
0530 5300309	SCHRAUBE	Screw	11
0530 5300310	SCHRAUBE M4	Screw M4	10
0530 5300311		Fastening plate A	10
0530 5300312	SCHRAUBE	Screw	10
0530 5300313		Fastening plate	10
0530 5300314		Cover plate	10
0530 5300315		Fastening block	10
0530 5300316	SCHEIBE	Washer	10
0530 53003170		Pick-up installing base	10
0530 5300326	SCHRAUBE	Screw	11
0530 5300327	SCHRAUBE	Screw	10
0530 5300334		Adjusting finger	10
0530 5300335		Clamp	10
0530 5300336	SCHRAUBE	Screw	4
0530 5300337	SCHRAUBE	Screw	11
0530 5300338	SCHRAUBE	Screw	10

www.promelectroavtomat.ru

Teilenummer Part No.	Bezeichnung/Description D	GB	Seite Page
0530 5300339Z	KLAMMERFUSS LINKS DA	Clamp left DA	11
0530 5300340Z	KLAMMERFUSS RECHTS DA	Clamp right DA	11
0530 5300341	FINGERSCHUTZ	Finger guard	10, 12
0530 5300501		Holder	23
0530 53006010		Shank Device	12
0530 5300602		Fixing plate	12
0530 5300603	SCHRAUBE	Screw	12
0530 5300604	SCHEIBE	Washer	12
0530 5300605	PLATTE	Plate	12
0530 5300606G	SCHRAUBE	Screw	12
0530 53006070	PLATTE	Plate	12
0530 53060302	SCHRAUBE	Screw	10
0530 530-BA0501L	KLAMMERFUSS LINKS - C	Clamp left - C	11
0530 530-BA0501R	KLAMMERFUSS RECHTS - C	Clamp right - C	11
0530 530-BA0506L	KLAMMERFUSS LINKS - D	Clamp left - D	11
0530 530-BA0506R	KLAMMERFUSS RECHTS - D	Clamp right - D	11
0530 530-BA0507L	KLAMMERFUSS LINKS - F	Clamp left - F	11
0530 530-BA0507R	KLAMMERFUSS RECHTS - F	Clamp right - F	11
0530 530G0303	SCHRAUBE	Screw	12
0530 530G0801	SCHRAUBE	Screw	10, 23
0530 530G0901	SCHRAUBE	Screw	23
0530 530G2502	SCHRAUBE	Screw	10
0530 590124	STIELBILDNER K	Shank device asm.	13
0530 D8.07-12		Cloth feed presser plate	10
0530 E380202		Thread Take-up crank	1
0530 E380210		Needle hole guide (standard)	7
0530 E380312		Feed plate A	10
0530 E380318		Feed plate B	10
0530 E380321		Fastening plate B	10
0530 E380324		Installing shaft	10
0530 E380325	FEDER	Spring	10
0530 E80103		Clamp plate left	11
0530 E80106		Clamp plate right	11
0530 E80111		Setting clamp	10
0530 E802250		Storage	23
0530 G0101	SCHRAUBE	Screw	11
0531 360014	KNOPFKLAMMER K	Button clamp	12
0531 360020	KULISSE	Slotted lever	12
0531 360060	SCHIENE	Rail	12
0531 360070	FEDER	Spring	12
0531 360110	BLOCK	Block	12
0531 360133	STOFFPLATTE V	Material plate	15
0531 360143	STOFFPLATTE V	Material plate	12
0531 360183	AUFNAHME V	Seat	12
0531 360190	ACHSE	Axle	12
0531 360200	ANSATZSCHRAUBE	Shoulder screw	12
0531 360210	AUFNAHME RECHTS	Seat right	15
0531 360220	AUFNAHME LINKS	Seat left	15
0531 360230	AUFNAHME RECHTS	Seat right	12
0531 360240	AUFNAHME LINKS	Seat left	12
0531 360280	ANSCHLAG	Stop	12
0531 360330	BLECH	Plate	12
0531 360340	ACHSE	Axle	12
0531 360360	PLATTE	Plate	12
0531 360383	BLOCK V	Block	12
0531 360390	STIEL	Shank	12, 15
0531 360403	KNOPFHALTEBLECH V	Button holder plate	15
0531 360410	LEITBLECH	Guide plate	15

www.promelectroavtomat.ru

Teilenummer Part No.	Bezeichnung/Description D	GB	Seite Page
0531 360420	KNOTENBLECH	Gusset plate	15
0531 360440	FINGER	Finger	15
0531 360450	KORUNDPAPIER	Sandpaper	12, 15
0531 360490	KULISSENSTEIN	Slide block	12
0531 360513	GRUNDPLATTE V	Bed plate cpl.	12
0531 360520	RAENDELSCHRAUBE	Knurled screw	12
0531 360530	KOPPEL	Connecting rod	12
0531 360543	RASTE V	Notch	15
0531 360553	HEBEL V	Lever	12
0531 360560	HEBEL	Lever	12
0531 360570	HEBEL	Lever	12
0531 360580	HEBEL	Lever	15
0531 360590	ACHSE	Axle	15
0531 360600	GEW.STIFT	Threaded pin	15
0531 360610	FEDER	Spring	15
0531 360623	KLEMMKLOBEN V	Clamping block cpl.	15
0531 360630	BUNDSCHRAUBE	Collar screw	12
0531 360644	SLTIELBILDNER K	Button shank shaper	15
0531 360660	HUELSE	Sleeve	12
0531 360673	STOFFPLATTE V	Material plate cpl.	15
0531 360680	FINGERSCHUTZ	Finger guard	12
0556 000612	6KT.SCHR. M4X13,5	Hexagonal screw M4X13,5	12
0699 979100	SCHLAUCH-PVC	Vinyl pipe	17
0700 000043	SCHUBKASTEN KS	Drawer	18
0700 000044	FUEHRUNGSLEISTE KS	Guide bar	18
0700 000045	PLATTE	Plate	18
0700 000050	EINLAGE	Filt	18
0700 051002	TISCHPLATTE	Table top	18
0718 000254	STANGE	Rod	18
0791 001085	GARNSTAENDERROHR KURZ	Thread spool holder rod B	23
0791 001086	GARNSTAENDERROHR	Thread spool holder rod A	23
0791 001091	GARNHALTEARM	Thread spool holder arm	23
0791 001093 A	SCHEIBE A5,5	Washer 5	23
0791 001095	MUTTER M5	Nut M5	23
0791 001096	FADENFUEHRUNG K	Thread guide asm.	23
0792 007155	DRUCKFEDER	Spring	13
0805 401650	SCHEIBE	Washer	12
0806 402670	KLEMMSTUECK	Clamping peace	22, 23
0806 402680	KLEMMSTUECK	Clamping peace	22, 23
0933 001544	OELPUMPE K	Oil pump asm.	17
0933 006268	FLACHKOPFSCHRAUBE	Pan-head screw	12
0933 020030	SCHEIBE	Washer	12
0944 001366	LINSENSCHR.	Fillister head screw	15
0990 240057	MUFFE	Socket	23
0992 018957	ANSATZSCHRAUBE	Shoulder screw	12
0993 270940	GEW.STIFT	Threaded pin	15
0995 340617	6KT.MUTTER PG 11x9	Hexagonal nut 11x9	23
0998 880560	PASSSCHEIBE 5X10X0,1	Adjusting ring	8
0999 220752	OELDOCHT	Oil wick	17
9092 013500	NADEL	Needle	1
9110 011141	ZAHNKRANZ	Coupling	2
9120 010020	RILLENKUGELLAGER	Ball bearing	12
9201 111227	6KT.SCHR.	Screw	12, 15
9201 111257	6KT.SCHR.	Screw	12
9201 112467	6KT.SCHR. M4x10	Screw M4x10	21
9201 112897	6KT.SCHR.	Screw	12
9201 113297	6KT.SCHR.	Screw	12
9201 113697	6KT.SCHR. M8x16	Screw M8x16	18

www.promelectroavtomat.ru

Teilenummer Part No.	Bezeichnung/Description D	GB	Seite Page
9202 001667	ZYL.SCHR. M3x8	Screw M3x8	13
9202 002067	ZYL.SCHR. M4x8	Screw M4x8	12, 13, 15
9202 002087	ZYL.SCHR. M4x12	Screw M4x12	12, 15, 21
9202 002097	ZYL.SCHR. M4X16	Screw M4x16	3
9202 002107	ZYL.SCHR.	Screw	22
9202 002467	ZYL.SCHR.	Screw	12
9202 002487	ZYL.SCHR.	Screw	22
9202 002527	ZYL.SCHR. M5x30	Screw M5x30	19
9202 002887	ZYL.SCHR. M6x12	Screw M6x12	18
9203 002441	ZYL.SCHR.	Screw	12
9203 002467	ZYL.SCHR.	Screw	12
9203 003027	ZYL.SCHR.	Screw	12
9203 003672	ZYL.SCHR. M4X12	Screw M4x12	3
9204 201057	LINSENSCHR. M3x8-H	Fillister head screw M3x8	21
9204 201067	LINSENSCHR. M3x10-H	Fillister head screw M3x10	21
9204 201647	LINSENSCHR.	Fillister head screw	
9204 201657	LINSENSCHR.M4X8-H	Fillister head screw M4x8	3, 12, 21, 22
9204 202037	LINSENSCHR. M5x25-H	Fillister head screw M5x25	23
9204 301347	LINSENSCHR.	Fillister head screw	22
9204 301517	LINSENSCHR. KB25X14	Fillister head screw KB25X14	21
9205 021808	GEW.STIFT M2X2	Threaded pin M2x2	8
9205 101868	GEW.STIFT	Threaded pin	12
9207 170227	SPANPL. SCHR. 3,5x17	Screw 3,5x17	18
9207 170437	SPANPL. SCHR. 4x20	Screw 4x20	19
9207 170857	SPANPL. SCHR. 5x30	Screw 5x30	19
9207 171057	SPANPL. SCHR. 6x30	Screw 6x30	18
9231 000367	6KT.MUTTER	Hexagonal nut	12, 15
9231 110037	6KT.MUTTER M3	Hexagonal nut M3	13, 21
9231 110057	6KT.MUTTER M4	Hexagonal nut M4	3, 12, 13
9231 110137	6KT.MUTTER M8	Hexagonal nut M8	18
9234 000077	6KT.MUTTER M5	Hexagonal nut M5	12
9234 000087	6KT.MUTTER	Hexagonal nut	15
9330 000067	SCHEIBE A3,2	Washer 3	12, 13, 15
9330 000087	SCHEIBE A4,3	Washer 4	3, 7, 8, 13, 21
9330 000107	SCHEIBE A6,4	Washer 6	12, 18
9330 000127	SCHEIBE A8.4	Washer 8	18
9330 000177	SCHEIBE B19	Washer	23
9330 900077	SCHEIBE A3,2	Washer 3	12, 21
9330 900087	SCHEIBE	Washer	12
9330 900097	SCHEIBE A4,3	Washer 4	3, 12, 21
9330 900107	SCHEIBE	Washer	12
9330 900117	SCHEIBE B6,4	Washer 6	18
9332 300047	FEDERRING 4	Spring ring	3
9357 200056	KUGELZAPFEN	Ball pivot	18
9357 200106	KUGELPFANNE	Ball Seat	18
9400 000368	LINSENSCHR. M2,5X2,6	Screw M2.5x2.6	3, 8
9800 150009	NAEHANTRIEB O.S.	Motor motor	2
9800 330012	EXT. BETAETIGUNG	pedal sensor	19
9815 710100	INDUKTIVGEBER	inductive sensor	2
9822 510026	NAEHLEUCHTE	Lamp asm.	23
9822 510027	TISCHKLEMME	Lamp holder	23
9822 642010	LEUCHTMITTEL	Illuminant	23
9825 580503	Steckergehäuse 5 polig	Connector body	14
9825 580510	STECKERLEISTE 5 POLIG	Connector board	14
9825 580805	BUCHSENLEISTE	Socket board	2, 3, 4, 7, 14
9825 580806	STECKERGEHAEUSE	Connector body	2, 3, 4, 7, 14
9830 200108	TASTENGEHAEUSE	Button housing	21
9830 501001	DISTANZHUELSE	Distance collar	21

www.promelectroavtomat.ru

Teilenummer Part No.	Bezeichnung/Description D	GB	Seite Page
9830 501005	DISTANZHALTER	Distance holder	22
9835 501005	LASER	Laser	22, 23
9840 120027	BEF.SCHELLE H3P	Cable clamp	3, 21, 22
9840 120060	Zugentl. Schelle	Clip collar	19
9840 121001	KABELBINDER	Cable band	22
9840 121002	KABELBINDER	Cable tie	19
9840 938015	KABELKANAL	Cable duct	19
9850 001066	BEDIENFELD BF3	Panel BF3	20
9850 001190	BEDIENFELD BF2B	Panel BF2B	20
9850 510003	STEUERUNG K	Laser controller	22
9850 510004	STEUERUNG K + DONGLE	DAC 3 with dongle	19
9850 510004 GP01	DONGLE MIT SOFTWARE 510	Dongle with software 510	23
9850 805006	LEITERPLATTE K	Printed circuit board asm.	22
9870 001020	Leitungssatz K 230V	cable asm. 230V	19
9870 001021	Schuko-Steckdose	Power Outlet	23
9870 510007	LEITUNG K DAC3-PEDAL	pedal cable asm.	19
9870 510008	LEITUNG K 510	Cable asm.	21
9870 579025	LEITUNG K	Cable asm.	20
9870 806016	LEITUNG K	Cable asm.	19
9880 510006	TASTER K	Button asm.	21
MG43 000062	KLEMME	Clamp	18
MG43 000403	KLEMME	Clamp	18
MG43 000451	GESTAENGE K	Rod asm.	18
MG43 006542	LASCHE	Mounting link	21
MG53 002501	PEDAL K	Pedal asm.	18
MG53 007922	LASCHE	Mounting link	19
MG55 000501	MG 55-3 Gestell V	Stand	18
MG55 400294	MG 55-3 Gestell K	Stand asm.	18

www.promelectroavtomat.ru

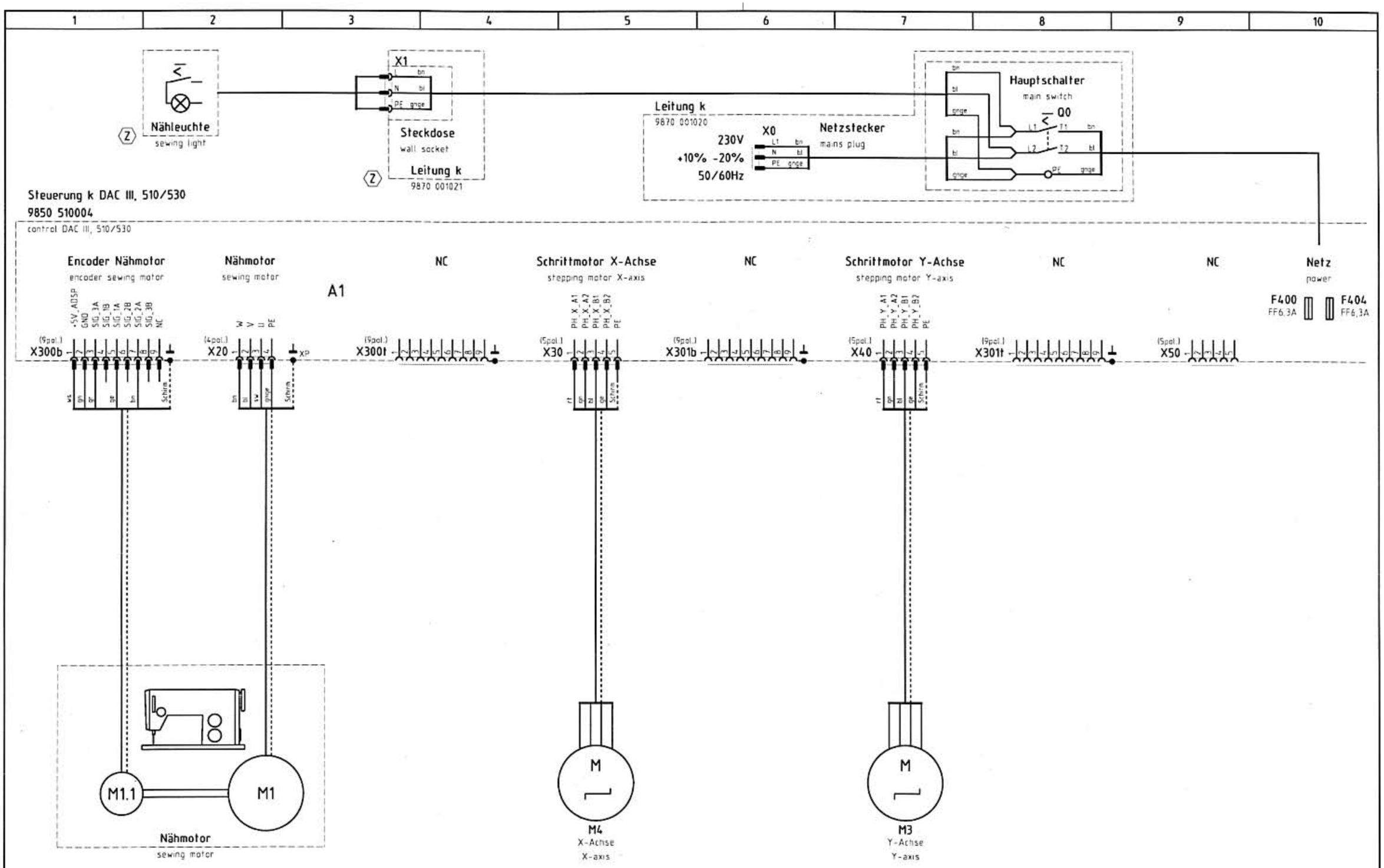

02. Sep. 2005

Zusatzeinrichtung
optional equipment

c	03.0	29.08.05	Cz	Datum	18.02.03	
b	02.0	10.12.04	Ba	Bearb.	Ba	
a	01.0	26.06.03	Ba	Gepr.		
	Änderung	Datum	Name	Norm		

DÜRKOPP ADLER AG
Bielefeld

Teilefamilie

Freigabe
0116 / 05

510/530, DAC III
Zuleitung, Steuerung, Nähantrieb, Schrittmotore
lead, control, sewing drive, stepping motors

Bauschaltplan
9890 510001 B

Blatt
1/7

www.pressfootservice.ru

Steuerung k DAC III, 510/530
9850 510004
control DAC III, 510/530

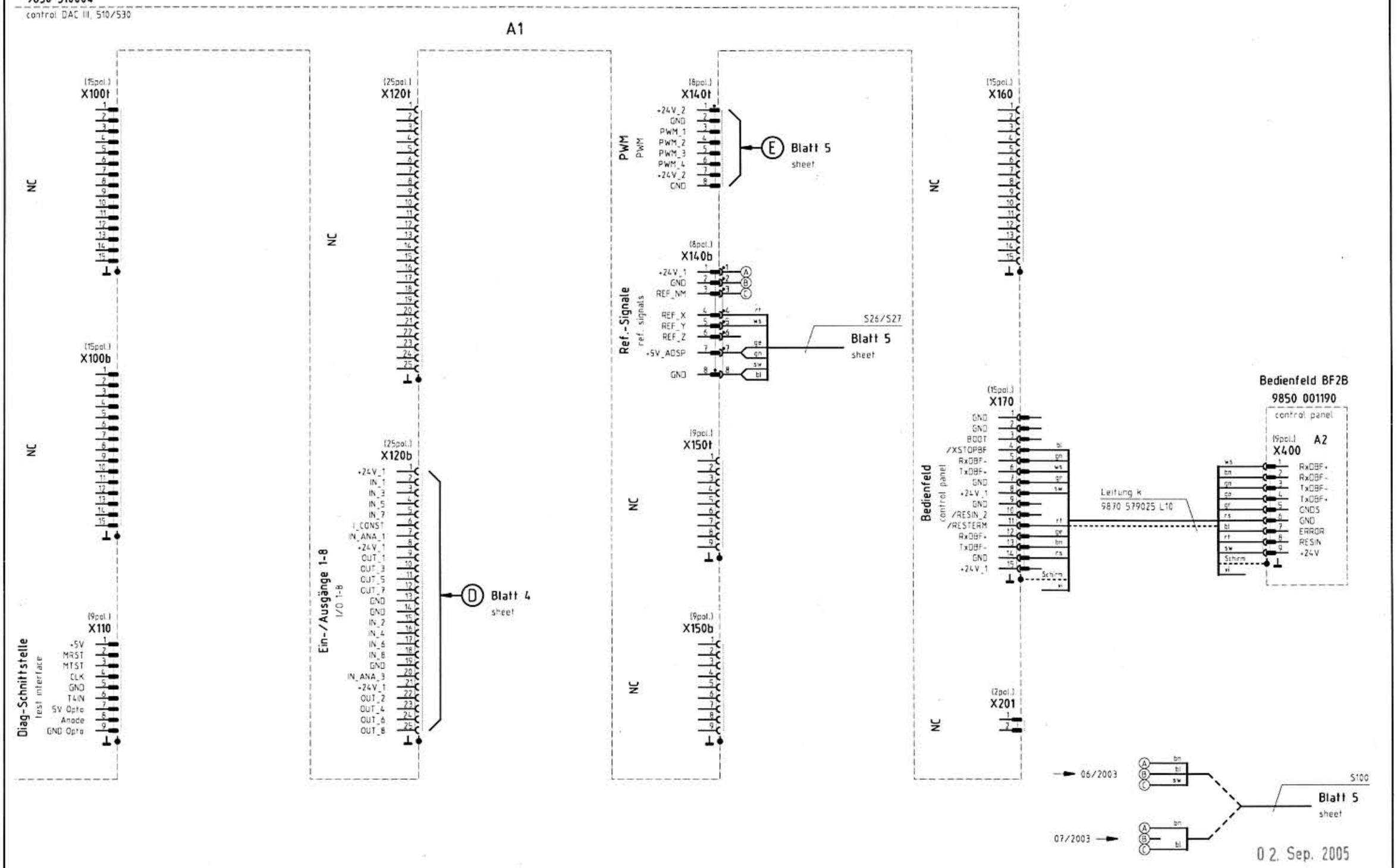

Kodierung
coding

Zusatzeinrichtung
optional equipment

c	03.0	29.08.05	Cz	Datum	18.02.03
b	02.0	10.12.04	Ba	Bearb.	Ba
a	01.0	26.06.03	Ba	Gepr.	
	Änderung	Datum	Name	Norm	

www.pneumatic-tech.ru

DÜRKOPP ADLER AG
Bielefeld

Teilefamilie

Freigabe
0116 / 05

510/530, DAC III
I/O, PWM, Ref.-Signale, Bedienfeld
I/O, PWM, ref. signals, control panel

Bauschaltplan
9890 510001 B

Blatt
2/7

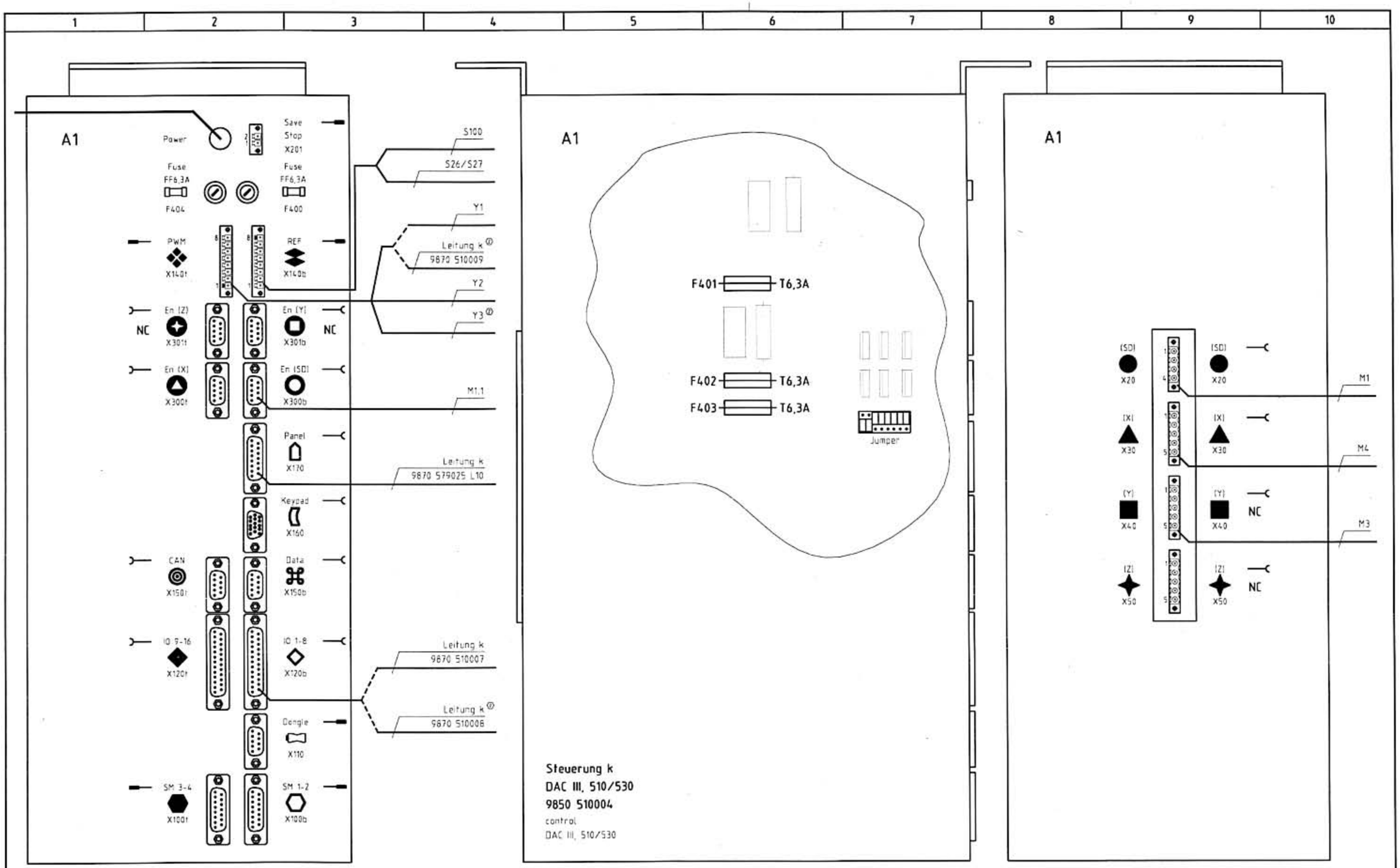

02. Sep. 2005

c	03.0	29.08.05	Cz	Datum	18.02.03	DÜRKOPP ADLER AG Bielefeld	Teilefamilie	510/530, DAC III Steuerung, Anschlußplan control, connection diagram	Bauschaltplan
b	02.0	10.12.04	Ba	Bearb.	Ba				9890 510001 B
a	01.0	26.06.03	Ba	Gepr.			Freigabe 0116 / 05		Blatt 3/7
	Änderung	Datum	Name	Norm					

www.prom-electro-service.ru

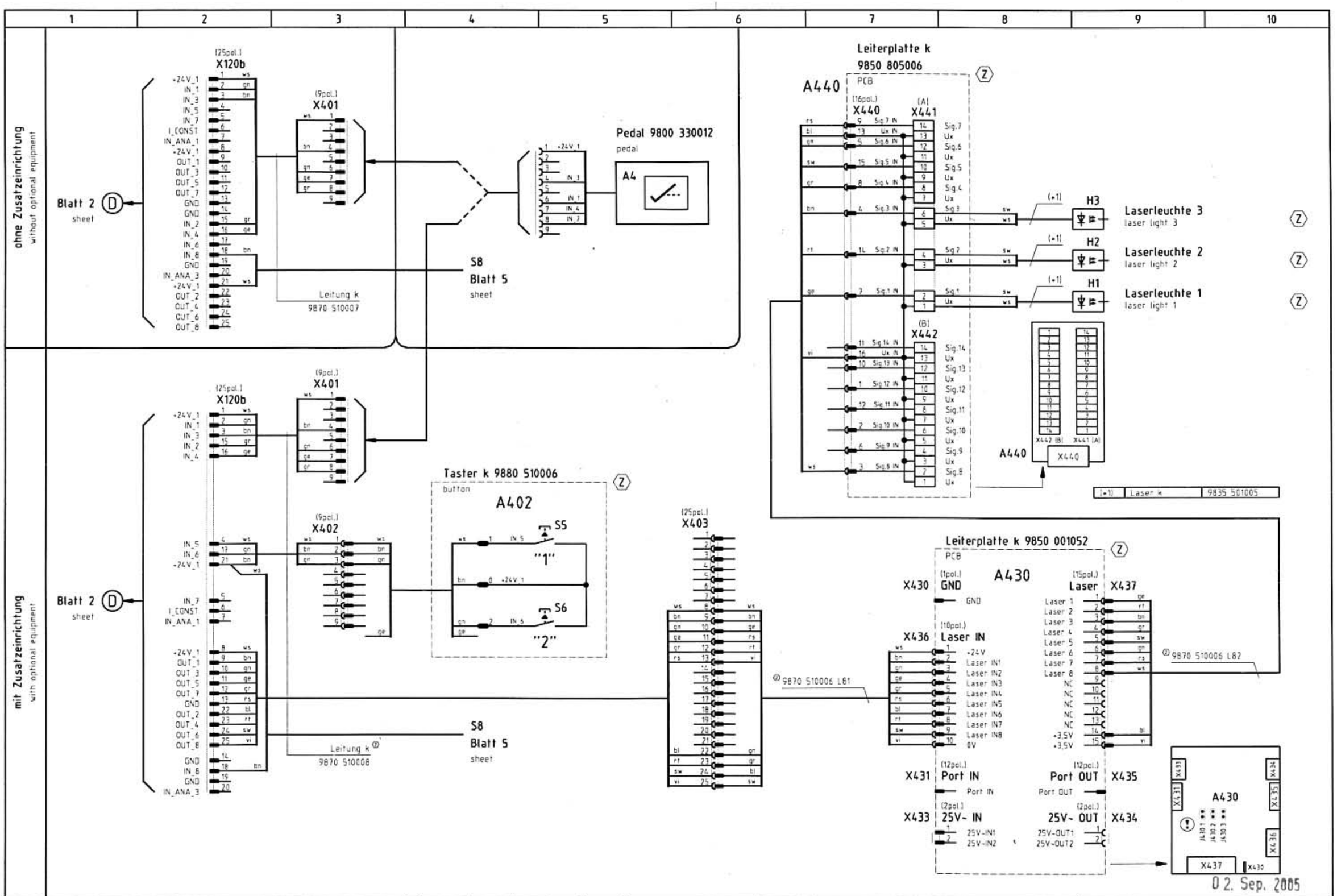

Konfiguration beachten !
observe the configuration !

Zusatzeinrichtung
optional equipment

c	03.0	29.08.05	Cz	Datum	18.02.03
b	02.0	10.12.04	Ba	Bearb.	Ba
a	01.0	26.06.03	Ba	Gepr.	
	Änderung	Datum	Name	Norm	

DÜRKOPP ADLER AG
Bielefeld

Teilefamilie

Freigabe
0116 / 05

510/530, DAC III
Pedal, Taster, Laserleuchten
pedal, button, laser lights

Bauschaltplan
9890 510001 B

Blatt
4/7

www.pnmedectronics.ru

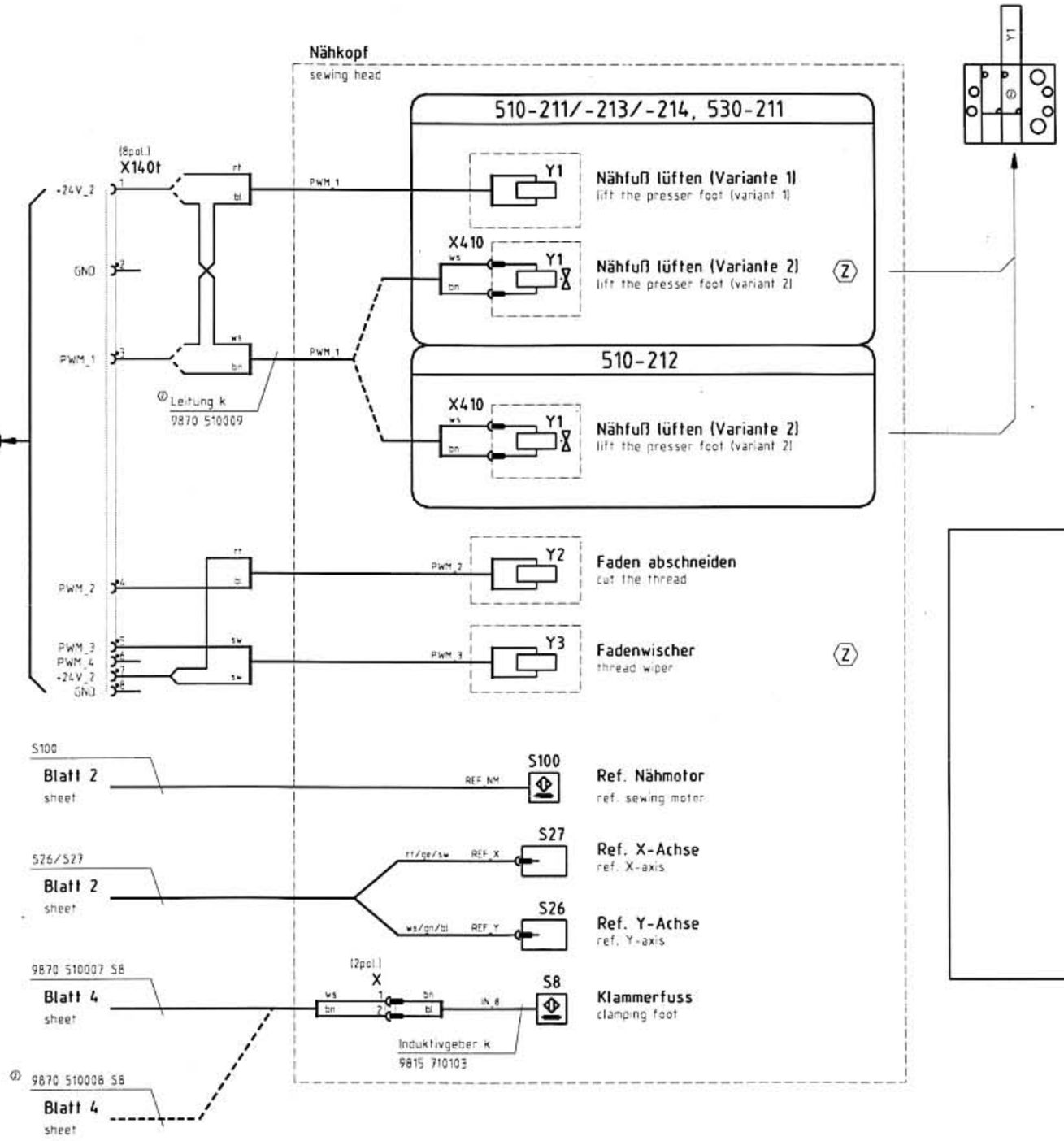

Ansicht von oben
top view

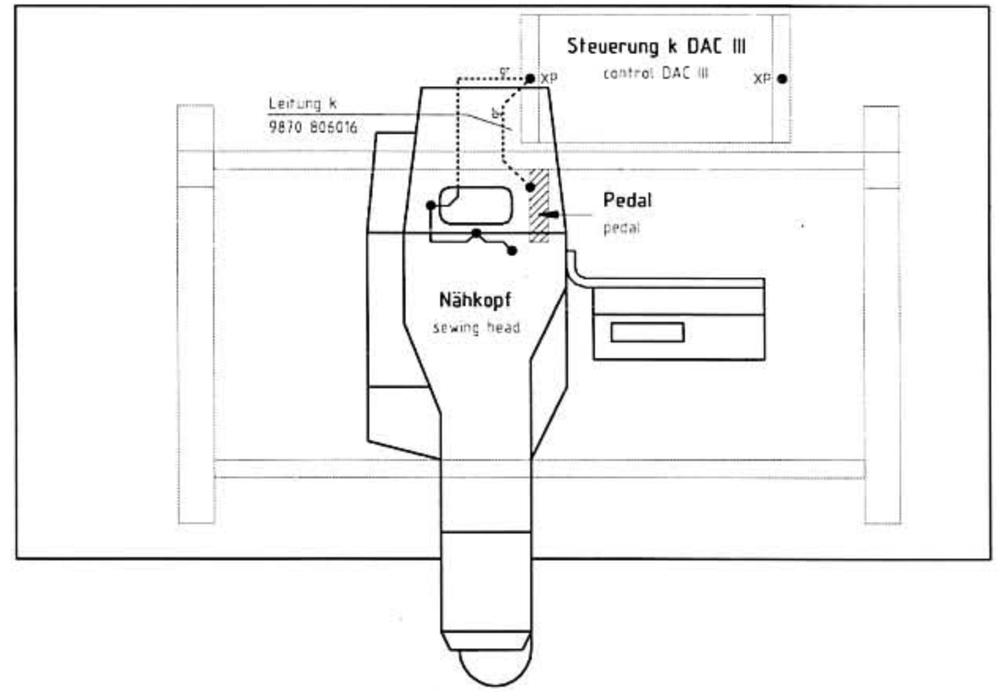

02. Sep. 2005

Kodierung
coding

Zusatzeinrichtung
optional equipment

c	03.0	29.08.05	Cz	Datum	18.02.03
b	02.0	10.12.04	Ba	Bearb.	Ba
a	01.0	26.06.03	Ba	Gepr.	
	Änderung	Datum	Name	Norm	

DÜRKOPP ADLER AG
Bielefeld

Teilefamilie

Freigabe
0116 / 05

510/530, DAC III
Ein-/Ausgänge Nähkopf, Potentialausgleich
inputs/outputs sewing head, operational bondings

Bauschaltplan
9890 510001 B

Blatt
5/7

www.pfaff-industrial-manual.ru

1	2	3	4	5	6	7	8	9	10

Verbindung/ connection	Punkt/ point	Blatt/ sheet
W	X20/1 M1/1	1 1
V	X20/2 M1/2	1 1
U	X20/3 M1/3	1 1
PE	X20/4 M1/4	1 1
PH_X_A1	X30/1 M4/1	1 1
PH_X_A2	X30/2 M4/2	1 1
PH_X_B1	X30/3 M4/3	1 1
PH_X_B2	X30/4 M4/4	1 1
PE	X30/5	1
PH_Y_A1	X40/1 M3/1	1 1
PH_Y_A2	X40/2 M3/2	1 1
PH_Y_B1	X40/3 M3/3	1 1
PH_Y_B2	X40/4 M3/4	1 1
PE	X40/5	1
+5V	X110/1	2
MRST	X110/2	2
MTST	X110/3	2
CLK	X110/4	2
GND	X110/5	2
T4IN	X110/6	2
5V Opto	X110/7	2
Anode	X110/8	2
GND Opto	X110/9	2

Nähmotor
Schrittmotore
Diag-Schnittstelle

sewing motor
stepping motors
test interface

Verbindung/ connection	Punkt/ point	Blatt/ sheet
+24V_1	X120b/1 A4-X401/1	2 4
IN_1	X120b/2 A4-X401/6	2 4
IN_3	X120b/3 A4-X401/4	2 4
IN_5	X120b/4 A402-X402/1	2 4
IN_7	X120b/5	2
I_CONST	X120b/6	2
IN_ANA_1	X120b/7	2
+24V_1	X120b/8 A430-X436/1	2 4
OUT_1	X120b/9 A430-X436/2	2 4
OUT_3	X120b/10 A430-X436/4	2 4
OUT_5	X120b/11 A430-X436/6	2 4
OUT_7	X120b/12 A430-X436/8	2 4
GND	X120b/13 A430-X436/10	2 4
GND	X120b/14	2
IN_2	X120b/15 A4-X401/8	2 4
IN_4	X120b/16 A4-X401/7	2 4
IN_6	X120b/17 A402-X402/3	2 4
IN_8	X120b/18 S8	2 5
GND	X120b/19	2
IN_ANA_3	X120b/20	2
+24V_1	X120b/21 A402-X402/2 S8	2 4 5
OUT_2	X120b/22 A430-X436/3	2 4
OUT_4	X120b/23 A430-X436/5	2 4
OUT_6	X120b/24 A430-X436/7	2 4
OUT_8	X120b/25 A430-X436/9	2 4

Ein-/Ausgänge

inputs/outputs

Verbindung/ connection	Punkt/ point	Blatt/ sheet
+24V_2 *Var.1 =>* *Var.2 =>*	X140t/1 Y1/rt Y1-X410/ws	2 5 5
GND	X140t/2	2
PWM_1 *Var.1 =>* *Var.2 =>*	X140t/3 Y1/bl Y1-X410/bn	2 5 5
PWM_2	X140t/4 Y2/bl	2 5
PWM_3	X140t/5 Y3/sw2	2 5
PWM_4	X140t/6	2
+24V_2	X140t/7 Y2/rt Y3/sw1	2 5 5
GND	X140t/8	2
+24V_1	X140b/1 S100	2 5
GND *-> 06/2003*	X140b/2 S100	2 5
REF_NM	X140b/3 S100	2 5
REF_X	X140b/4 S27	2 5
REF_Y	X140b/5 S26	2 5
REF_Z	X140b/6	2
+5V_ADSP	X140b/7 S26 S27	2 5 5
GND	X140b/8 S26 S27	2 5 5

PWM
Ref.-Signale

PWM
ref. signals

Verbindung/ connection	Punkt/ point	Blatt/ sheet
GND	X170/1	2
GND	X170/2	2
BOOT	X170/3	2
/XSTOPBF	X170/4 A2-X400/7	2 2
RxDBF-	X170/5 A2-X400/3	2 2
TxDBF+	X170/6 A2-X400/1	2 2
GND	X170/7 A2-X400/5	2 2
+24V_1	X170/8 A2-X400/9	2 2
GND	X170/9	2
/RESIN_2	X170/10	2
/RESTERM	X170/11 A2-X400/8	2 2
RxDBF+	X170/12 A2-X400/4	2 2
TxDBF-	X170/13 A2-X400/2	2 2
GND	X170/14 A2-X400/6	2 2
+24V_1	X170/15	2
+5V_ADSP	X300b/1 M1.1/1	1 1
GND	X300b/2 M1.1/2	1 1
SIG_3A	X300b/3 M1.1/3	1 1
SIG_1B	X300b/4	1
SIG_1A	X300b/5 M1.1/5	1 1
SIG_2B	X300b/6	1
SIG_2A	X300b/7 M1.1/7	1 1
SIG_3B	X300b/8	1
NC	X300b/9	1

Bedienfeld
Encoder Nähmotor

control panel
encoder sewing motor

Verbindung/ connection	Punkt/ point	Blatt/ sheet
GND	A430-X430/1	4
Port IN	A430-X431	4
25V-IN1	A430-X433/1	4
25V-IN2	A430-X433/2	4
25V-OUT1	A430-X434/1	4
25V-OUT2	A430-X434/2	4
Port OUT	A430-X435	4
+24V	A430-X436/1 (s. X120b/8)	6
Laser IN1	A430-X436/2 (s. X120b/9)	6
Laser IN2	A430-X436/3 (s. X120b/22)	6
Laser IN3	A430-X436/4 (s. X120b/10)	6
Laser IN4	A430-X436/5 (s. X120b/23)	6
Laser IN5	A430-X436/6 (s. X120b/11)	6
Laser IN6	A430-X436/7 (s. X120b/24)	6
Laser IN7	A430-X436/8 (s. X120b/12)	6
Laser IN8	A430-X436/9 (s. X120b/25)	6
0V	A430-X436/10 (s. X120b/13)	6

Laser-Modul

laser module

Verbindung/ connection	Punkt/ point	Blatt/ sheet
Laser 1	A430-X437/1 A440-X440/7	4 4
Laser 2	A430-X437/2 A440-X440/14	4 4
Laser 3	A430-X437/3 A440-X440/4	4 4
Laser 4	A430-X437/4 A440-X440/8	4 4
Laser 5	A430-X437/5 A440-X440/15	4 4
Laser 6	A430-X437/6 A440-X440/5	4 4
Laser 7	A430-X437/7 A440-X440/9	4 4
Laser 8	A430-X437/8 A440-X440/3	4 4
NC	A430-X437/9	4
NC	A430-X437/10	4
NC	A430-X437/11	4
NC	A430-X437/12	4
NC	A430-X437/13	4
+3,5V	A430-X437/14 A440-X440/13	4 4
+3,5V	A430-X437/15 A440-X440/16	4 4

Verbindung/ connection	Punkt/ point	Blatt/ sheet
Sig.12 IN	A440-X440/1	4
Sig.10 IN	A440-X440/2	4
Sig.8 IN	A440-X440/3 (s. A430-X437/8)	6
Sig.3 IN	A440-X440/4 (s. A430-X437/3)	6
Sig.6 IN	A440-X440/5 (s. A430-X437/6)	6
Sig.9 IN	A440-X440/6	4
Sig.1 IN	A440-X440/7 (s. A430-X437/1)	6
Sig.4 IN	A440-X440/8 (s. A430-X437/4)	6
Sig.7 IN	A440-X440/9 (s. A430-X437/7)	6
Sig.13 IN	A440-X440/10	4
Sig.14 IN	A440-X440/11	4
Sig.11 IN	A440-X440/12	4
Ux IN	A440-X440/13 (s. A430-X437/14)	6
Sig.2 IN	A440-X440/14 (s. A430-X437/2)	6
Sig.5 IN	A440-X440/15 (s. A430-X437/5)	6
Ux IN	A440-X440/16 (s. A430-X437/15)	6

Verbindung/ connection	Punkt/ point	Blatt/ sheet
Ux	A440-X441/1 H1-ws	4 4
Sig.1	A440-X441/2 H1-sw	4 4
Ux	A440-X441/3 H2-ws	4 4
Sig.2	A440-X441/4 H2-sw	4 4
Ux	A440-X441/5 H3-ws	4 4
Sig.3	A440-X441/6 H3-sw	4 4
Ux	A440-X441/7	4
Sig.4	A440-X441/8	4
Ux	A440-X441/9	4
Sig.5	A440-X441/10	4
Ux	A440-X441/11	4
Sig.6	A440-X441/12	4
Ux	A440-X441/13	4
Sig.7	A440-X441/14	4
Ux	A440-X442/1	4
Sig.8	A440-X442/2	4
Ux	A440-X442/3	4
Sig.9	A440-X442/4	4
Ux	A440-X442/5	4
Sig.10	A440-X442/6	4
Ux	A440-X442/7	4
Sig.11	A440-X442/8	4
Ux	A440-X442/9	4
Sig.12	A440-X442/10	4
Ux	A440-X442/11	4
Sig.13	A440-X442/12	4
Ux	A440-X442/13	4
Sig.14	A440-X442/14	4

Verteiler Laserleuchten

distributor laser lights

02. Sep. 2005

Ⓩ **Zusatzeinrichtung**
optional equipment

c	03.0	29.08.05	Cz	Datum	18.02.03
b	02.0	10.12.04	Ba	Bearb.	Ba
a	01.0	26.06.03	Ba	Gepr.	
	Änderung	Datum	Name	Norm	

www.pfaff-electronic.ru

DÜRKOPP ADLER AG
Bielefeld

Teilefamilie

Freigabe 0116 / 05

510/530, DAC III
Verbindungsliste
connection list

Bauschaltplan
9890 510001 B

Blatt 6/7

1	2	3	4	5	6	7	8	9	10

A4	IN_1: X401/6>X120b/2 IN_2: X401/8>X120b/15 IN_3: X401/4>X120b/3 IN_4: X401/7>X120b/16	+24V_1: X401/1>X120b/1
A402	"1": 1>X402/1>X120b/4 (IN_5) "2": 2>X402/3>X120b/17 (IN_6)	+24V_1: 0>X402/2>X120b/21
A430 (Z)	+24V: A430-X436/1>X403-8>X120b/8 (+24V_1) 0V: A430-X436/10>X403-13>X120b/13 (GND)	
H1 (Z)	>A440-X441/2>A440-X440/7>A430-X437/1 (Laser 1) +3,5V: A440-X441/1>A440-X440/13+16>A430-X437/14+15 Ctrl: A430-X436/2>X403/9>X120b/9 (OUT_1)	
H2 (Z)	>A440-X441/4>A440-X440/14>A430-X437/2 (Laser 2) +3,5V: A440-X441/3>A440-X440/13+16>A430-X437/14+15 Ctrl: A430-X436/3>X403/22>X120b/22 (OUT_2)	
H3 (Z)	>A440-X441/6>A440-X440/4>A430-X437/3 (Laser 3) +3,5V: A440-X441/5>A440-X440/13+16>A430-X437/14+15 Ctrl: A430-X436/4>X403/10>X120b/10 (OUT_3)	
M1	>X20 (SO)	
M1.1	>X300b (En SO)	
M3	>X40 (Y)	
M4	>X30 (X)	

510-211/-213/-214, 530-211

Y1	>X140t/3 (PWM_1) +24V: X140t/1 (+24V_2)	Magnet solenoid
" (Z)	>X410/bn>X140t/3 (PWM_1) +24V: X410/ws>X140t/1 (+24V_2)	Magnetventil solenoid valve

S8	>X120b/16 (IN_8) +24V: X120b/21 (+24V_1)	
S26	>X140b/5	+5V: X140b/7 (+5V_AOSP) GND: X140b/8
S27	>X140b/4	+5V: X140b/7 (+5V_AOSP) GND: X140b/8
S100	>X140b/3 (REF_NM) +24V: X140b/1 (+24V_1) GND: X140b/2 (GND) GND: -	 -> 06/2003 07/2003 ->
Y2	>X140t/4 (PWM_2) +24V: X140t/7 (+24V_2)	
Y3 (Z)	>X140t/5 (PWM_3) +24V: X140t/1 (+24V_2)	

510-212

Y1	>X410/bn>X140t/3 (PWM_1) +24V: X410/ws>X140t/1 (+24V_2)	Magnetventil solenoid valve

Kurzzeichen	Teilenummer	Benennung	denomination	Typ	Bemerkung
A1	9850 510004	Steuerung k	control	DAC III, 510/530	Variante 3
A2	9850 001190	Bedienfeld	control panel	BF2B	
A4	9800 330012	Pedal	pedal	EB301	
A402	9880 510006	Taster k	button		
A430	9850 001052	Leiterplatte k	PCB		CAN-Laser-Modul
A440	9850 805006	Leiterplatte k	PCB		Verteiler Laser
F400	9825 810107	Sicherung	fuse	FF6,3A	5x20mm
F404	9825 810107	Sicherung	fuse	FF6,3A	5x20mm
H1	9835 501005	Laser	laser		
H2	9835 501005	Laser	laser		
H3	9835 501005	Laser	laser		
M1	9800 150009	Nähantrieb o.S.	sewing motor	QE3760	ohne Steuerung
M3	0510 86BYGT03YA	Schrittmotor	step motor		Y-Achse
M4	0510 86BYG103XA	Schrittmotor	step motor		X-Achse
Q0	9815 580008	Netzschalter	main switch		rot-gelb
S8	9815 710103	Induktivgeber	approximate switch		
S26	0510 TLP1204(3)	Lichtschranke k	light barrier		Ref. Y-Achse
S27	0510 TLP1201A	Lichtschranke k	light barrier		Ref. X-Achse
S100	9815 710201	Induktivgeber	approximate switch	IFRM 08P1104/PL	---> 06/2003
S100	9815 710100	Induktivgeber	approximate switch	NBB1,5-8GM40-Z0	07/2003 --->
X0	9825 190104	Netzstecker	mains plug		
X1	9825 190103	Steckdose	wall socket		
Y2	0510 5100816Z	Magnet	solenoid		
Y3	0530 5300106	Magnet	solenoid		
		510-211/-213/-214 530-211			
Y1	0510 D2804110	Magnet	solenoid		
Y1	9710 063000	Magnetventil	solenoid valve		optional
		510-212			
Y1	9710 063000	Magnetventil	solenoid valve		

9890 510001 B / 7

0 2. Sep. 2005

(Z) Zusatzeinrichtung
optional equipment

c	03.0	29.08.05	Cz	Datum	18.02.03
b	02.0	10.12.04	Ba	Bearb.	Ba
a	01.0	26.06.03	Ba	Gepr.	
	Änderung	Datum	Name	Norm	

DÜRKOPP ADLER AG Bielefeld

Teilefamilie

Freigabe 0116 / 05

510/530, DAC III
Betriebsmittel, Teileliste
equipment, parts list

Bauschaltplan
9890 510001 B

Blatt 7/7

www.prom-electronics.ru