# SERVICE MANUAL

# FOR

# ELECTRONIC SEWING MACHINE

# MODELS ZZ3-B835 (ACE I · BL9500)
# -B826 (PC5000)
# -B825 (ACE II · 6000)

# GENERAL INFORMATION

- This service manual has been compiled for explaining the repair procedures for the ZZ3-B835, -B826 and -B825 ELECTRONIC SEWING MACHINES.
- Use this service manual in conjunction with the Parts List when you make a repair.
- This machine is manufactured based on product specifications which are current at the time of printing of this manual.However, specifications are subject to change for improvement without notice, so contact the manufacturer or your local sales agent for information regarding such changes.

Brother Industries, Ltd.

Nagoya, Japan

# NOTES ON ADJUSTMENT AND REPAIRS

Because almost all of the manufacturing processes that go into LSIs which are used as microprocessors are a result of MOS technology, it is necessary to be careful to prevent damage from static electricity build-up during manufacturing and actual use of products which incorporate these circuits. Because of this, manufacturing and assembly are carried out in accordance with strict quality control standards.
Extreme care is also necessary when carrying out after-sales service of this product.

- The following symbols are used in this service manual.

| | |
|---|---|
| Move the part this way | 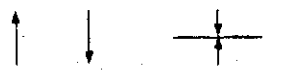 |
| Set the clearance as indicated |  |
| Move the part to its highest or lowest position | 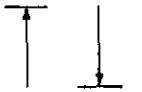 |

# CONTENTS


I. PRINCIPAL MECHANISMS ..... 2
II. DISASSEMBLING AND REASSEMBLY PROCEDURES ..... 15
III. ADJUSTMENT STANDARDS AND ADJUSTMENT PROCEDURES FOR MECHANICAL PARTS ..... 27
IV. PROBLEM DIAGNOSIS PROCEDURES FOR THE ELECTRONIC SYSTEMS ..... 55
V. HOW TO CONNECT THE CONNECTORS ON P.C. BOARDS ..... 66


# CAUTION

1. Always use rubber gloves when handling printed circuit boards; never touch the metal portion of a printed circuit board with bare hands.
2. Keep your body grounded in order to avoid generating static electricity.
3. Pack printed circuit boards in aluminum foil and avoid subjecting them to any form of impact during storage or transportation.
4. Do not touch or damage the metal portion of a printed circuit board with a screwdriver or any other tool while making repairs, etc.

# I. PRINCIPAL MECHANISMS

## CONTENTS


1. Mechanical chart <835, 826> ..... 3
2. Mechanical chart <825> ..... 4
3. Power transmission chart ..... 5
   (A) Generating mechanism of needle bar, thread take-up and zigzag movement <835, 826> ..... 5
   (B) Generating mechanism of needle bar, thread take-up lever and zigzag movements <825> ..... 6
   (C) Mechanism of feed dog and rotary hook movement <835, 826, 825> ..... 7
4. Electronic parts layout chart <835> ..... 8
5. Electronic parts layout chart <826, 825> ..... 9
6. Control system flow chart ..... 10
   (A) Control system block diagram <835> ..... 10
   (B) Control system block diagram <826> ..... 11
   (C) Control system block diagram <825> ..... 12
7. Main motor control system ..... 13
8. Pattern generator ..... 13
9. Other electronic component functions ..... 14

# 1. MECHANICAL CHART <835, 826>

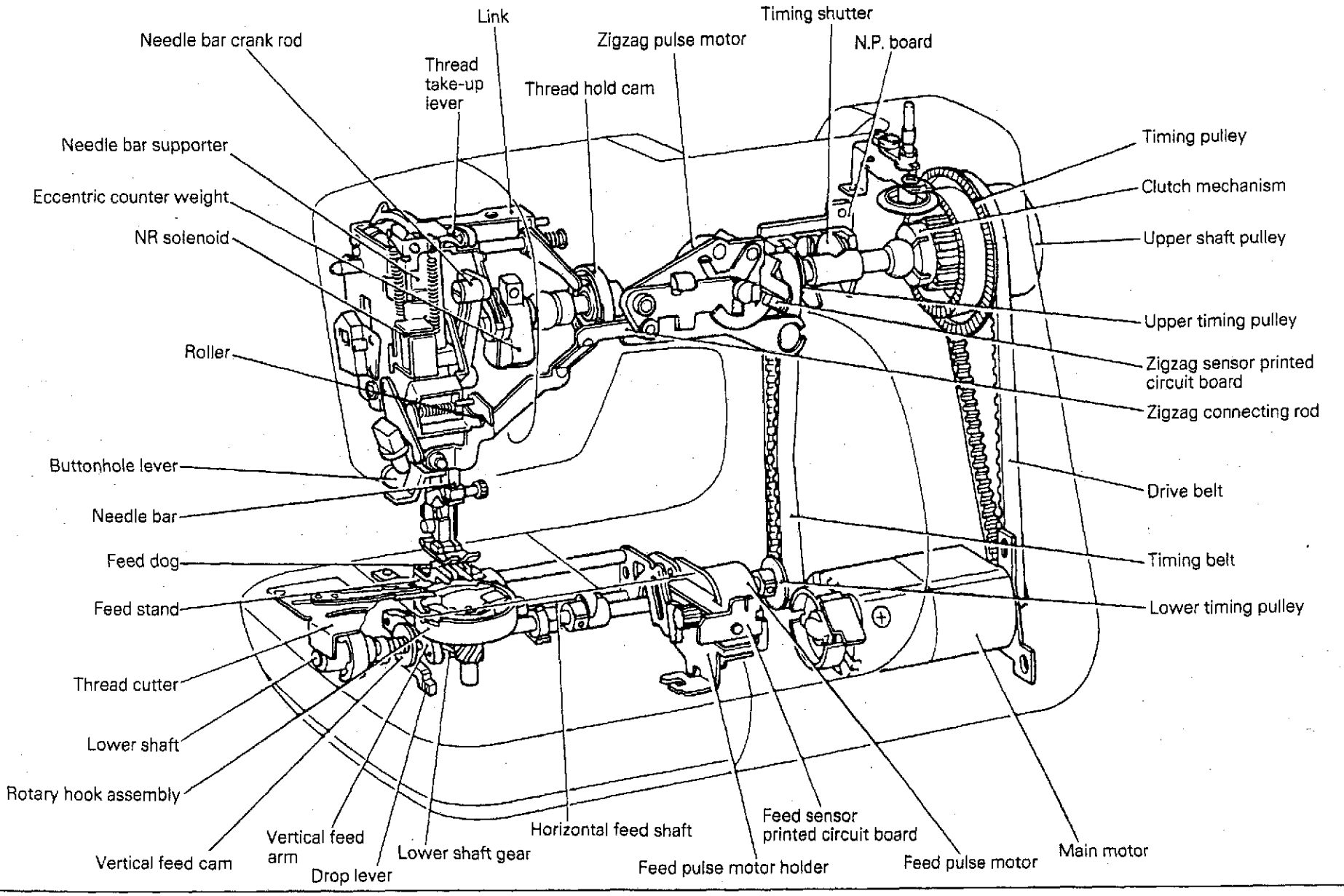

# 2. MECHANICAL CHART <825>

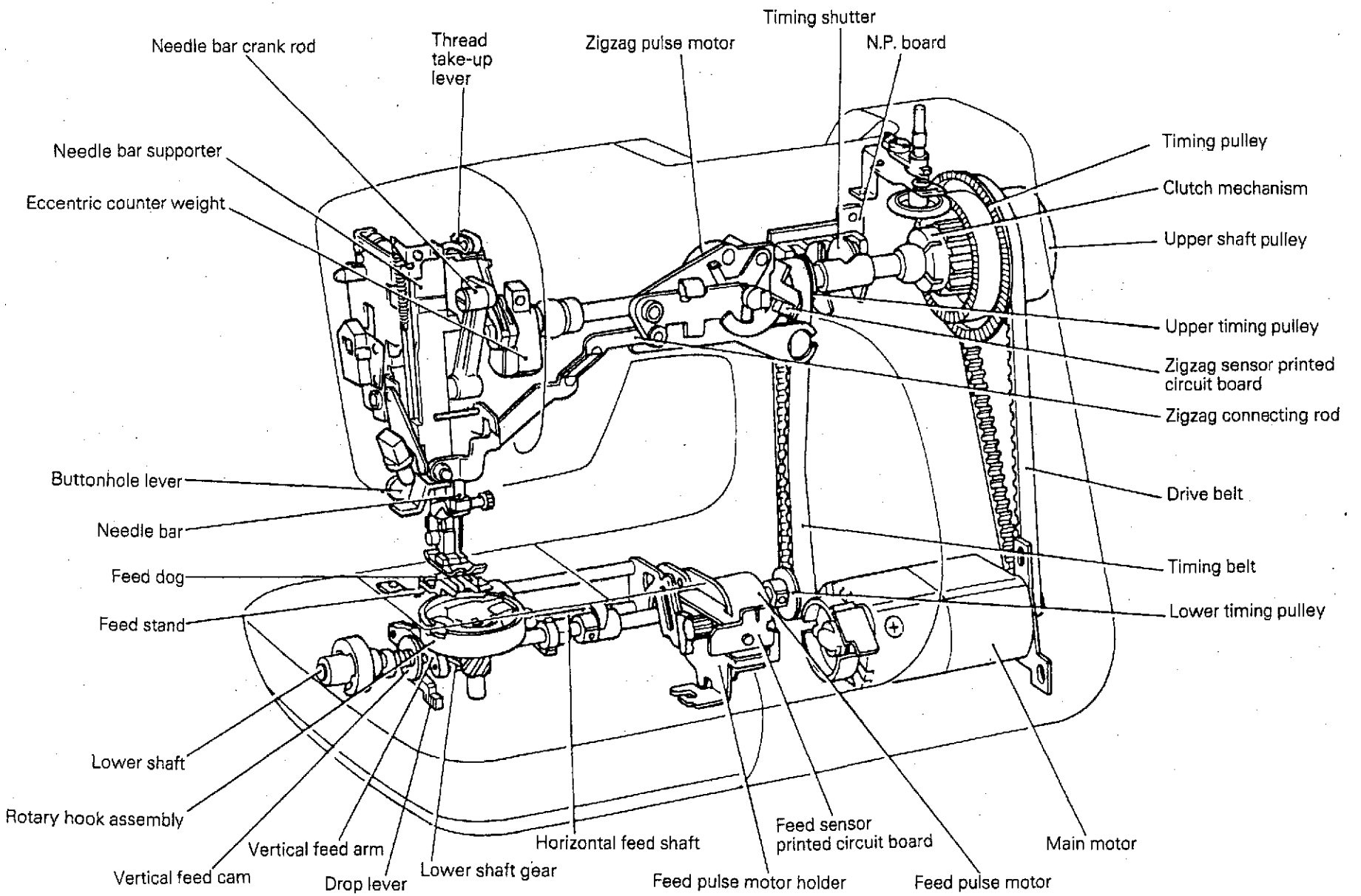

# 3. POWER TRANSMISSION CHART

## (A) Generating mechanism of needle bar, thread take-up lever and zigzag movements <835, 826>

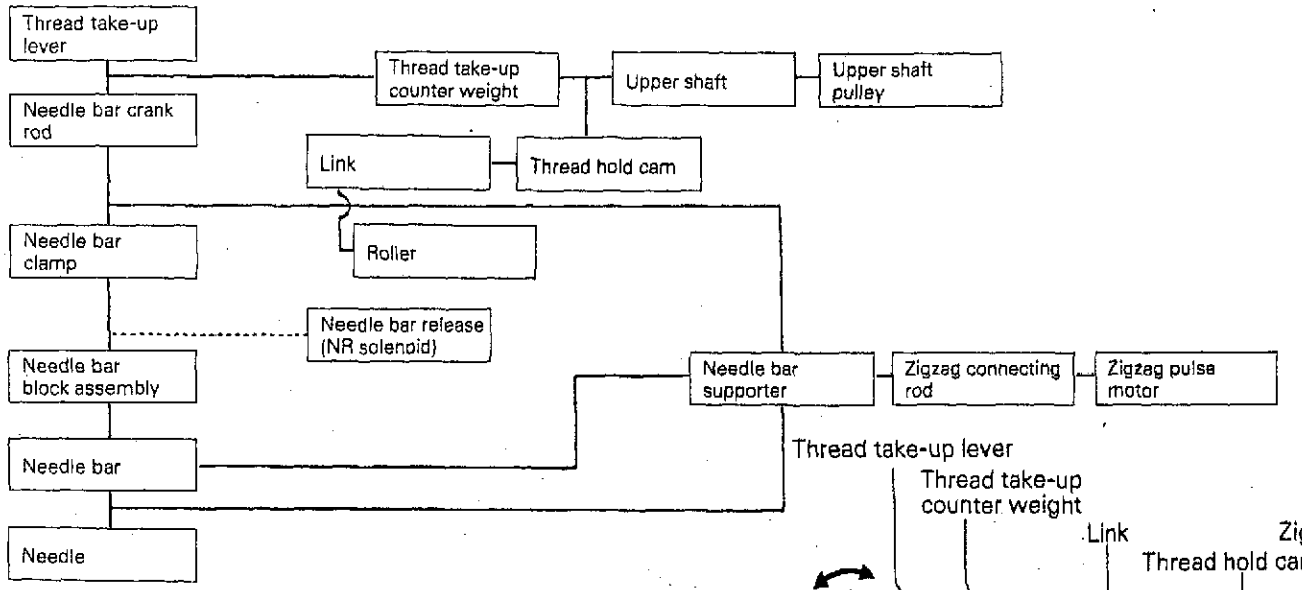


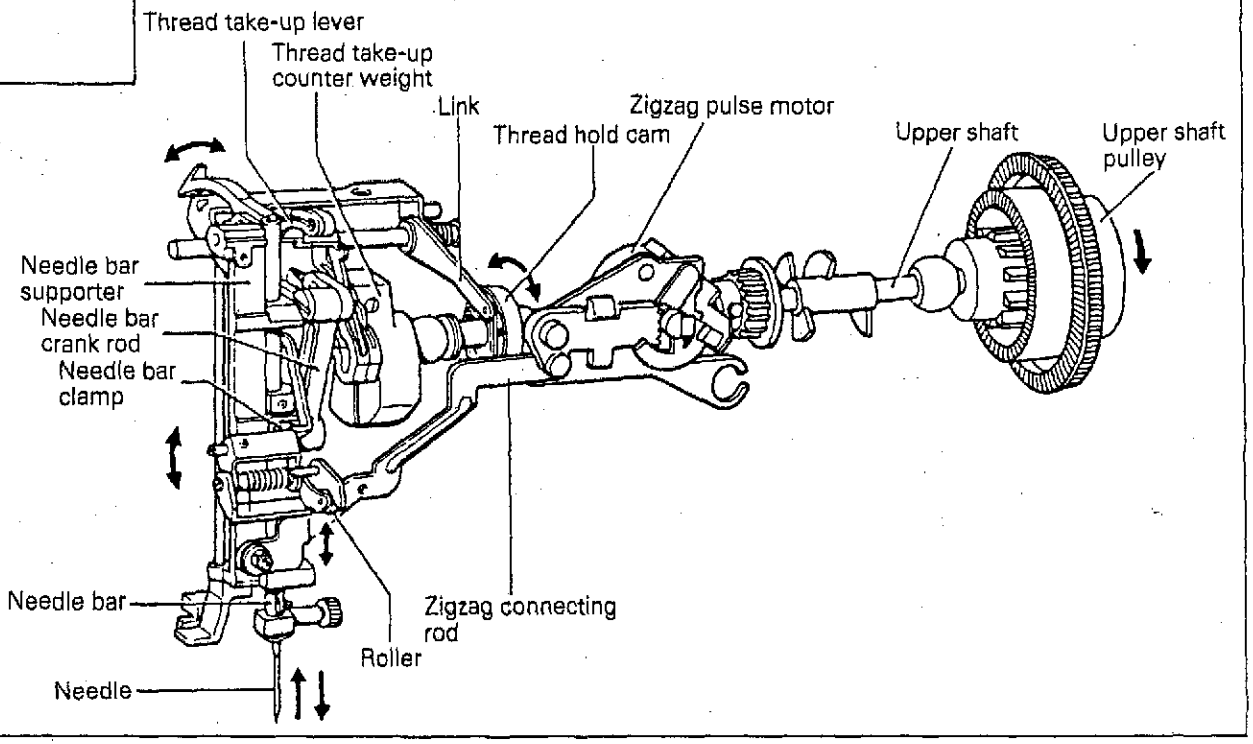

## (B) Generating mechanism of needle bar, thread take-up lever and zigzag movements <825>

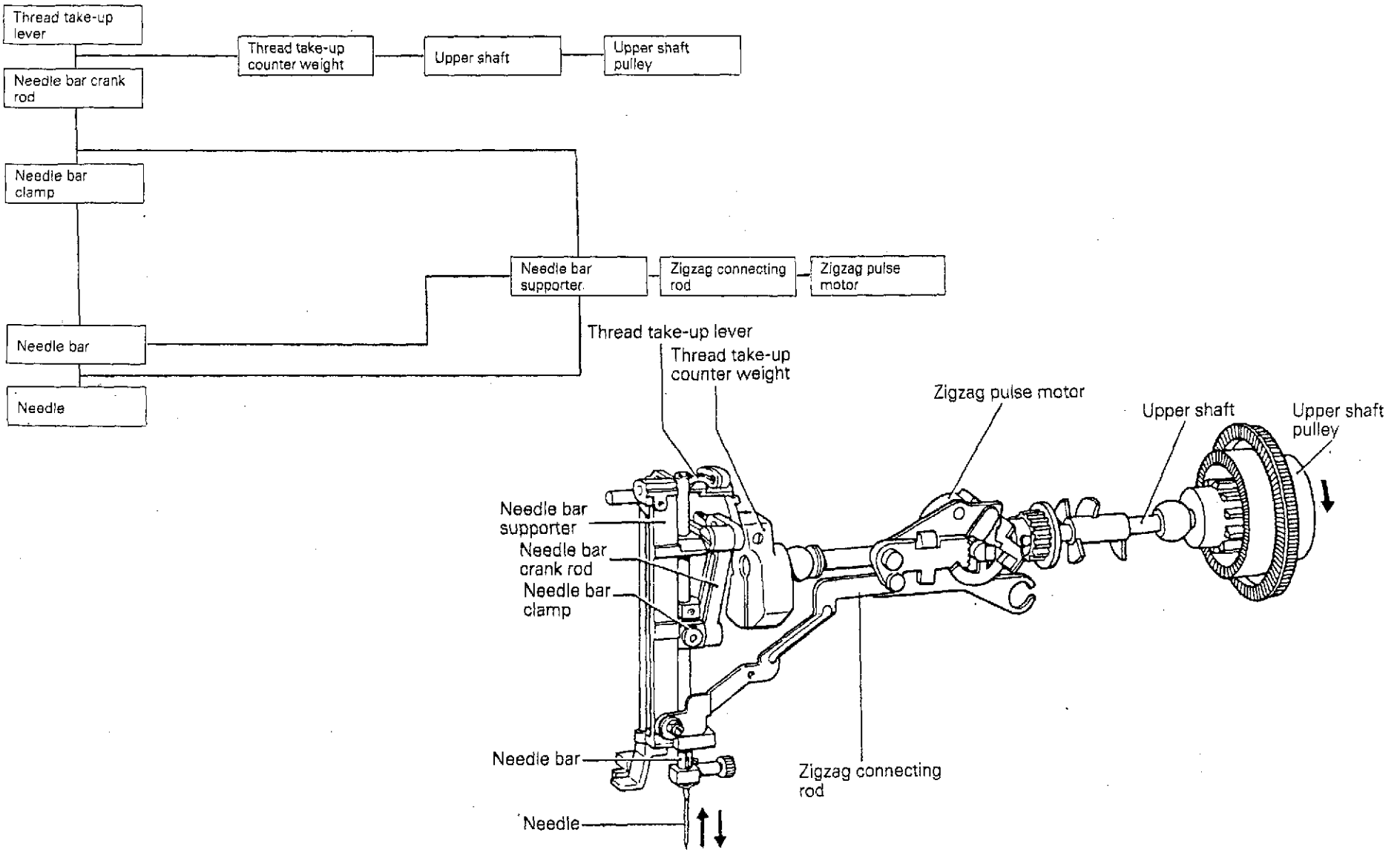

## (C) Feed dog and rotary hook movement <835, 826, 825>

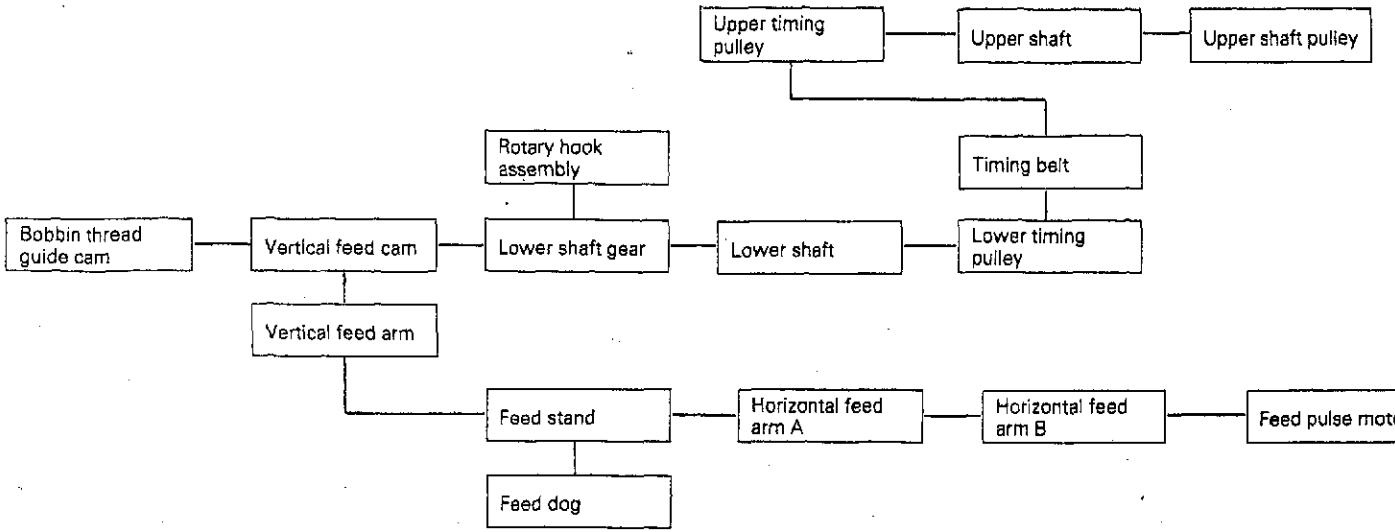


**Longitudinal feed, vertical feed and rotary hook mechanism**

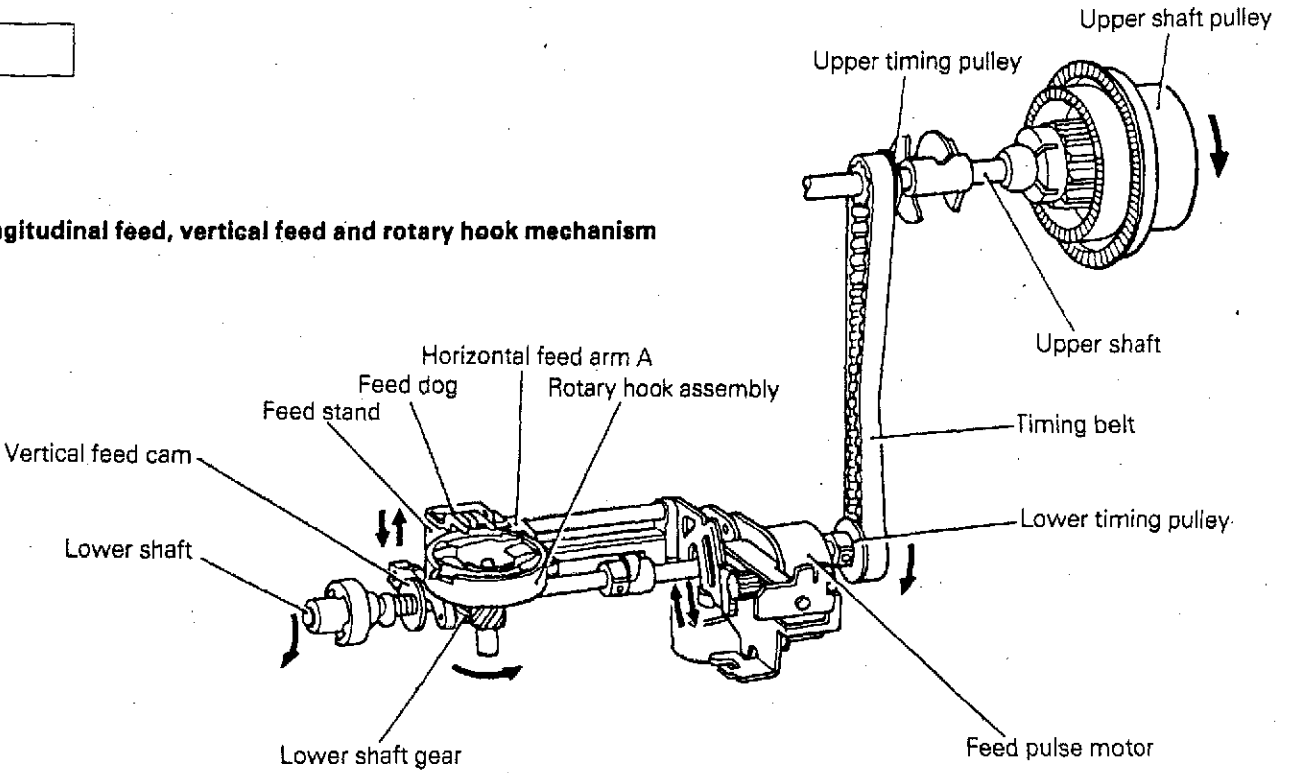

# 4. ELECTRONIC PARTS LAYOUT CHART <835>

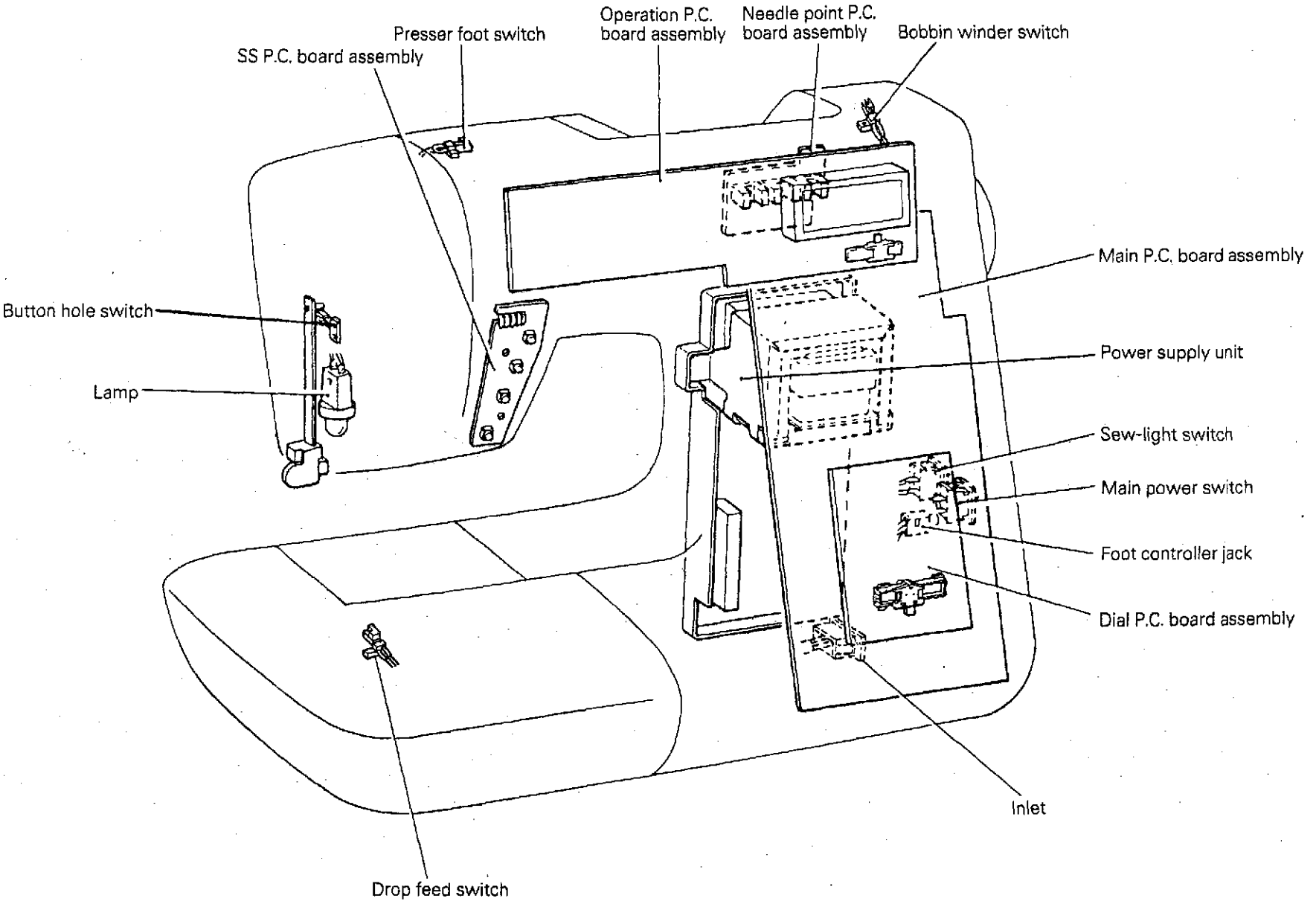

# 5. ELECTRONIC PARTS LAYOUT CHART <826, 825>

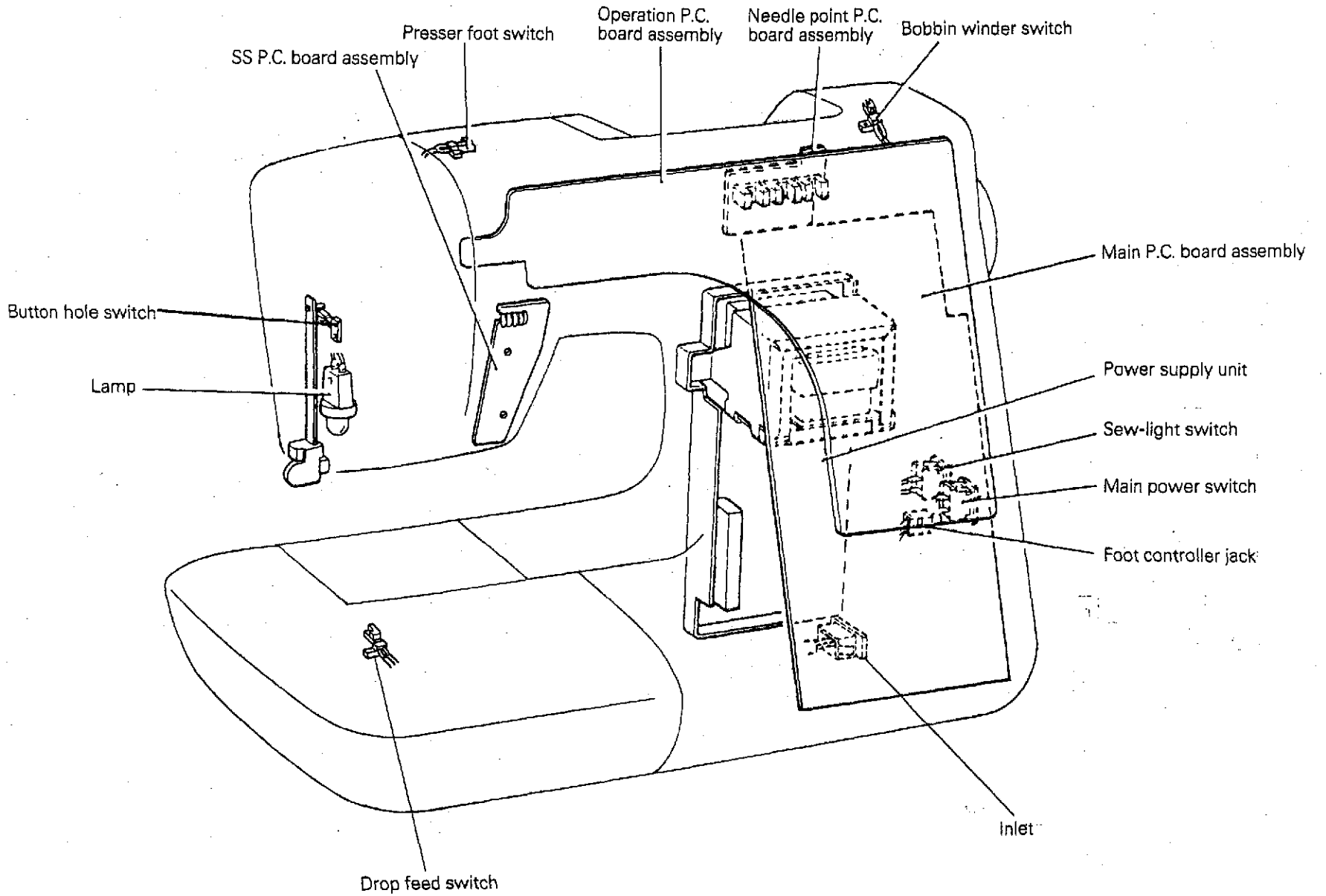

# 6. CONTROL SYSTEM FLOW CHART

## (A) Control system block diagram <835>

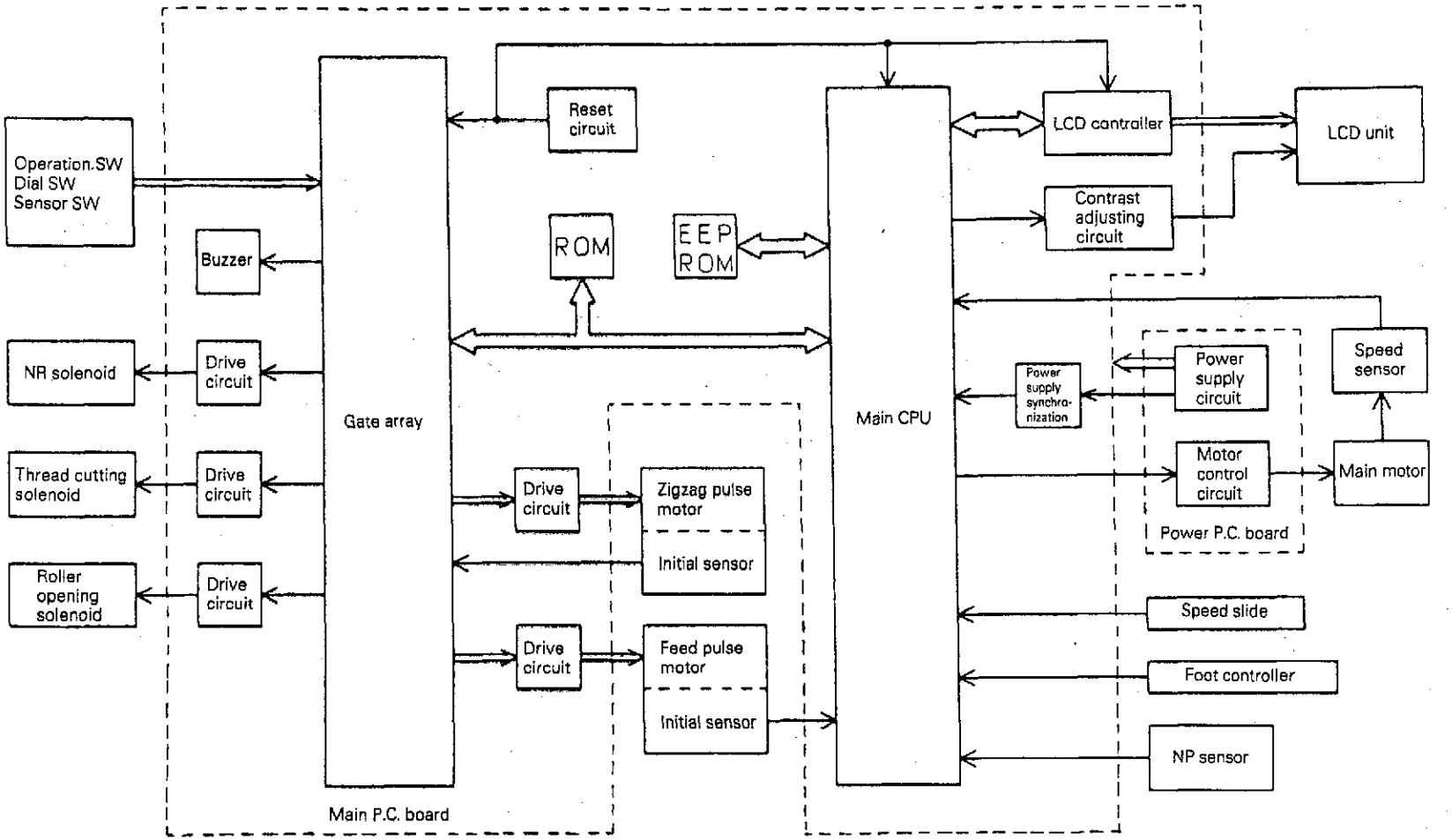

## (B) Control system block diagram <826>

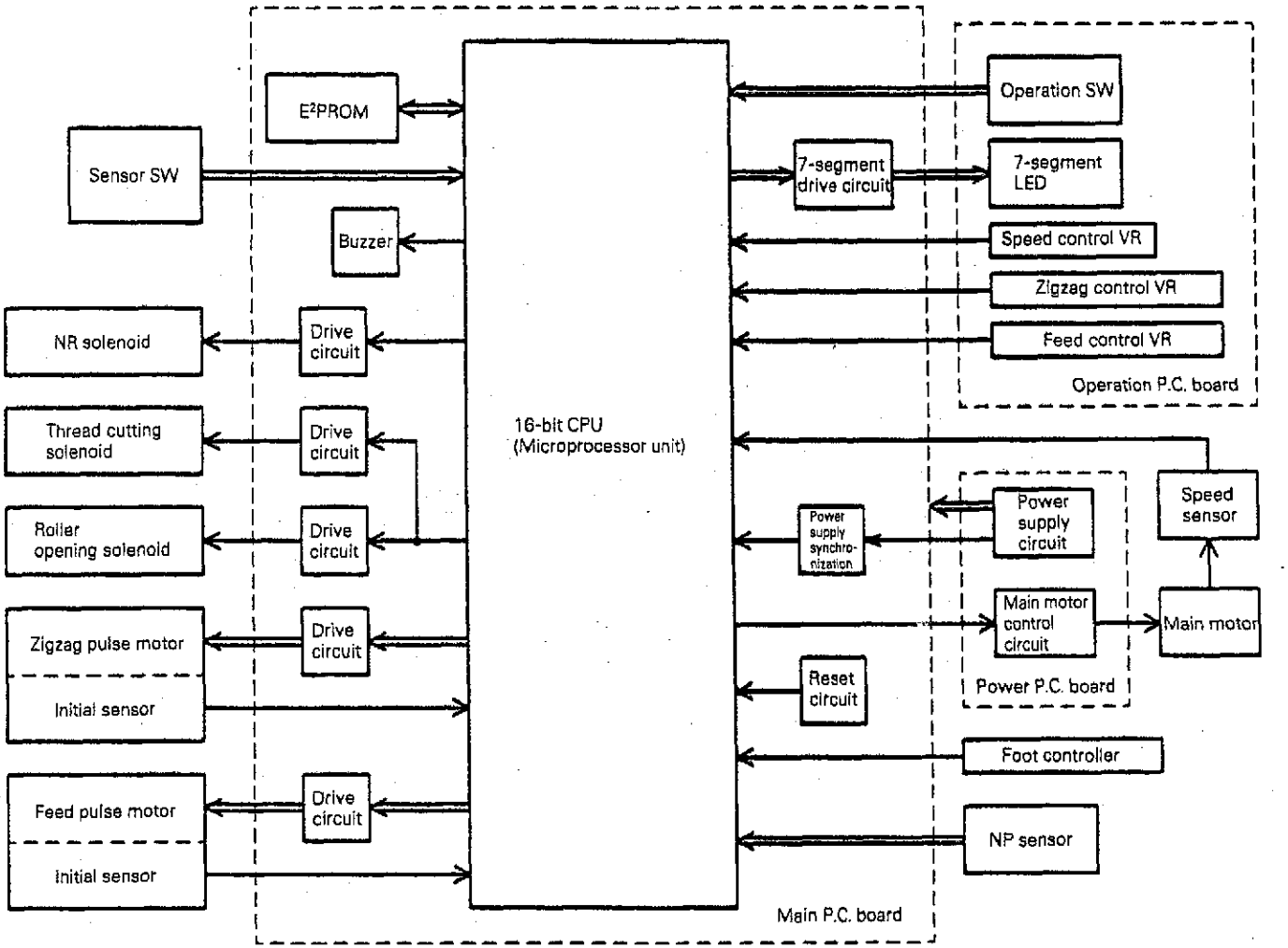

## (C) Control system block diagram <825>

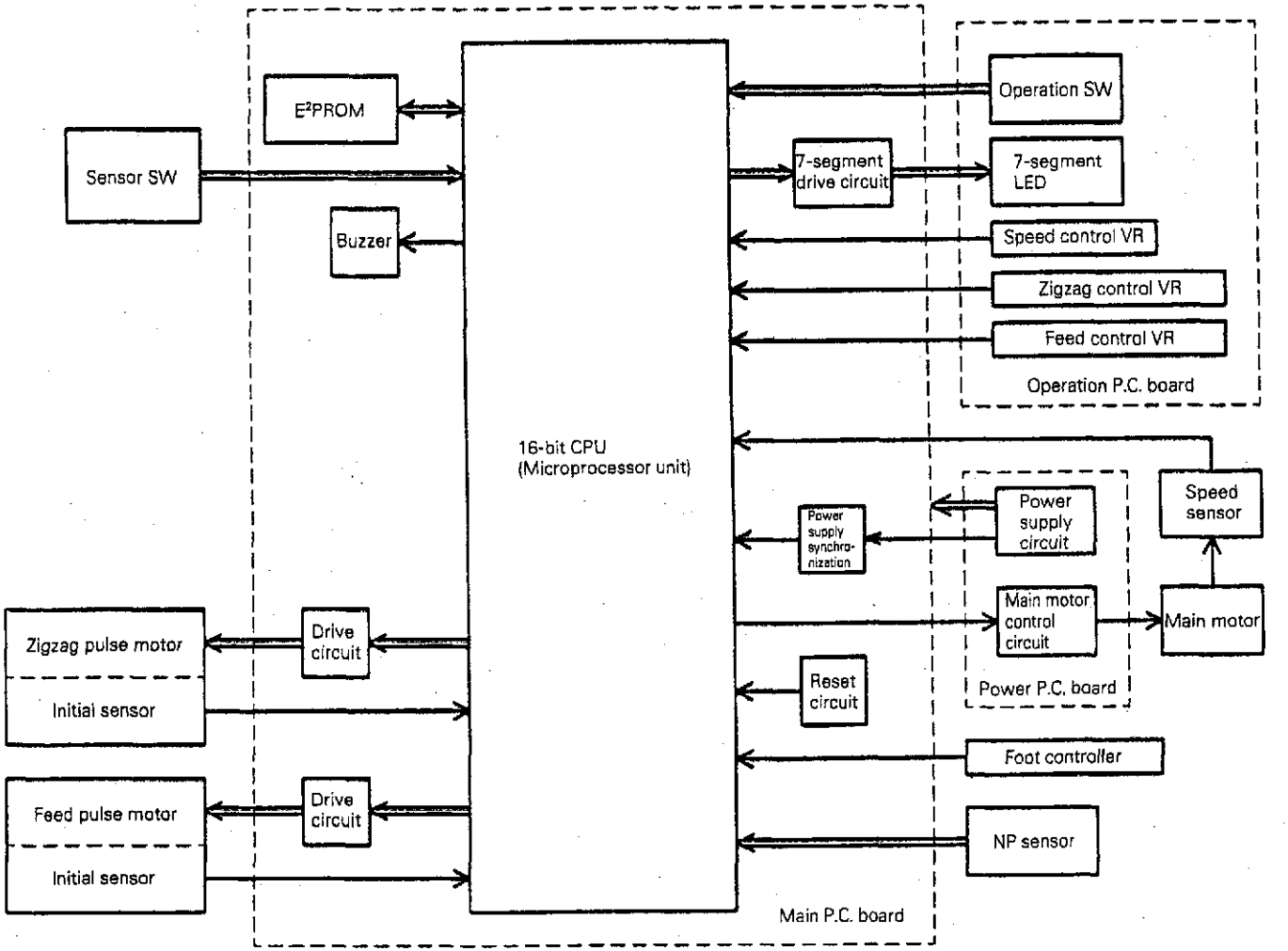

# 7. MAIN MOTOR CONTROL SYSTEM

The main motor of a sewing machine is required to make smooth changes from low-speed to high-speed operation without any fluctuations occurring due to load or temperature changes. To fully comply with this requirement, the main motor which has been adopted in the ZZ3-B836, -B826 and -B825 is an SSR phase-controlled motor.

# 8. PATTERN GENERATOR

For conventional sewing machines, the pattern was generated by rocking the needle bar and the feed dog by means of a pattern cam onto which the pattern data had been mechanically engraved. In contrast to this, this model stores the data electronically in memory and uses a feed pulse motor and a zigzag pulse motor to directly rock the needle bar and the feed dog to generate the pattern. As a result of this, it is possible to increase the number of patterns and the number of stitches simply by adding extra memory capacity, so that about 300 patterns comprising a total of approximately 15,000 stitches can be stored. In addition, the pulse motors must move the position of the needle while the needle is raised and stop it in the correct position (and similarly, they must move the position of the feed dog while the needle is lowered), so that highly-precise positioning and a fast response speed are required. Because of this, a PM-type feed pulse motor and zigzag pulse motor were adopted, and the circuit structure employed is a simple open-loop structure.

# 9. OTHER ELECTRONIC COMPONENT FUNCTIONS

Start/stop switch

This switch is used to start and stop the machine. If you wish to start sewing at low speed, the machine will sew at low speed as long as this switch is kept depressed.

Backstitch switch

This switch is used for backstitching and lockstitching. Backstitching is carried out at low speed in the reverse direction to sewing while the switch is being pressed. For lockstitching, three stitches are made at the current needle position and then sewing automatically stops.

Needle position (up/down) switch

This switch is used to change the needle position to either up or down.

Automatic thread cutter switch <835, 826>

This switch is used to cut the thread automatically. When this switch is pressed, the machine will cut the thread, regardless of the needle position, and sewing will then stop with the needle at its highest position.

Pattern selector dial

This dial is used when selecting the pattern to be sewn.

Buttonhole stitch switch

This switch is used to detect the edges of the buttonhole stitch by means of the buttonhole stitch presser foot and lever.

Buttonhole stitch lever switch

This switch is used to detect whether the buttonhole stitch lever is raised or lowered.

Presser foot switch

This switch is used to detect whether the presser foot is raised or lowered.

NP sensor

This sensor is used to detect the timing between the zigzag and feed pulse motors and between the solenoids for vertical roller opening, needle bar release and automatic thread cutting, and it also detects the needle up and down stop positions. The NP sensor detects the rotation angle of the upper shaft by means of the NP shutter which is mounted on the upper shaft and a photo interrupter.

Speed sensor

This sensor is used to detect the operation speed of the main motor.

It detects the operation speed by means of a shutter which is mounted to the shaft of the main motor and a photo interrupter.

Bobbin winder switch

This switch is used to detect whether the bobbin winder has been set when winding the bobbin thread.

Foot controller jack

When using the foot controller, connect it to this jack.

Transformer

This is used for driving the pulse motors and solenoids, to illuminate the lamps and to supply power to the electronic circuitry.

Lamp

This lamp can be used as a sewing light. An 8 V 2.4 W bulb should be used.

Drop feed switch

This switch is used to detect whether the feed dog is lowered or not.

# II. DISASSEMBLY AND REASSEMBLY PROCEDURES

## CONTENTS


1. Disassembling the external parts ..... 16
2. Disassembling the mechanical parts ..... 17
3. Reassembling the mechanical parts ..... 21
4. Reassembling the external parts ..... 25
5. Inspection after operation is completed ..... 26
6. Wiring harness arrangement ..... 26

# 1. DISASSEMBLING THE EXTERNAL PARTS

1. Remove the screw, and then remove the face plate from the left side.
2. Lift up the handle, remove the two screws of the head cover, remove the head cover, and then remove the thread guide cover.
3. Remove the screw cover of the belt cover, remove the screw, and then remove the belt cover from the right side.
4. Remove the two screws, and then remove the base plate by pulling it out to the left and then lifting it up toward you.
5. Loosen the screw on the left of the front cover, take out the connector and the flat cable, and then remove the front cover.
6. Lay the sewing machine on its side, remove the screw, and then remove the free arm cover from the left side.

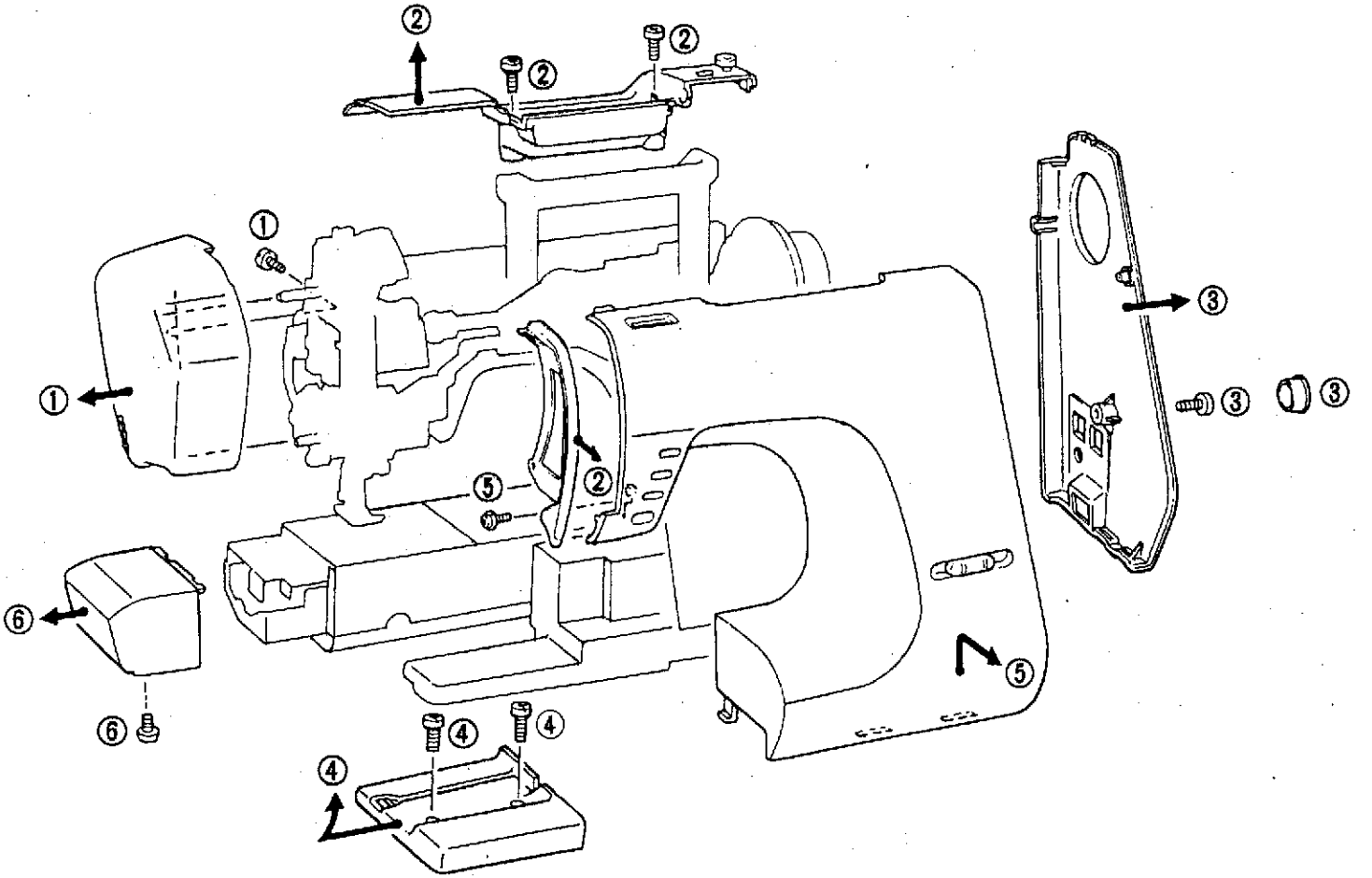

# 2. DISASSEMBLLING THE MECHANICAL PARTS

7. Disconnect the connectors, remove the screw, and then remove the main P.C. board.
8. Remove the screw and then remove the presser foot, presser foot holder and the needle.
9. Remove the three screws, and then remove the thread guide plate.
10. Remove the two screws, remove the lamp holder. Remove the screw, and then remove the presser foot switch holder. For the 825, remove the spring of the presser foot switch holder.
11. Remove the screw of the zigzag lever eccentric nut and the two screws securing the needle bar supporter assembly, and then remove the needle bar supporter assembly.
12. Remove the two screws, and then remove the lower P.C. board mounting plate.
13. Remove the two screws, and then remove the zigzag pulse motor holder assembly.
14. Remove the four screws, and then remove the left and right handle holders. Then remove the thread guide support and the upper P.C. mounting plate at the same time.
15. Remove the two screws, and then remove the bobbin winder assembly.

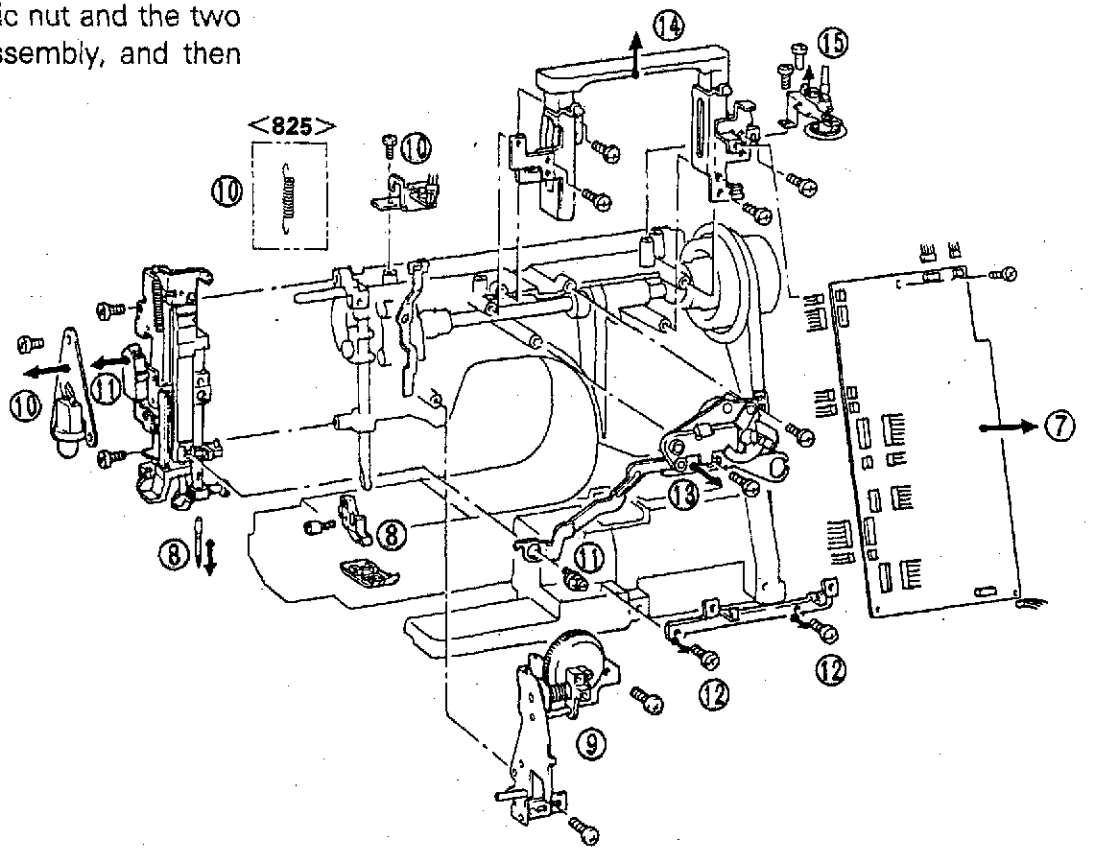

16. Loosen the set screw, remove the presser foot spring shaft, loosen the screw of the presser bar clamp, and then lift up the presser bar to remove it. Then remove the presser bar clamp and the presser foot spring.
17. Loosen the two screws, and then remove the roller opening unit. <835, 826>
18. Remove the two stop rings, remove the screw of the presser plate, and then pull the thread take-up lever stud out from the left side. <835, 826>
    Remove the stop ring, remove the screw of the presser plate, and then take out the thread take-up lever stud out from the left side. <825>
19. Remove the screw, and then remove the needle bar supporter shaft holder.
20. Remove the two screws, and then remove the needle plate assembly.
21. Disconnect the connector, remove the three screws, and then remove the thread cutter unit. <835, 826>
    Remove the two screws, and then remove the arm cover support. <825>
22. Remove the inner rotary hook.
23. Remove the screw, and then remove the inner rotary hook bracket.

**<835>**
**<826>**

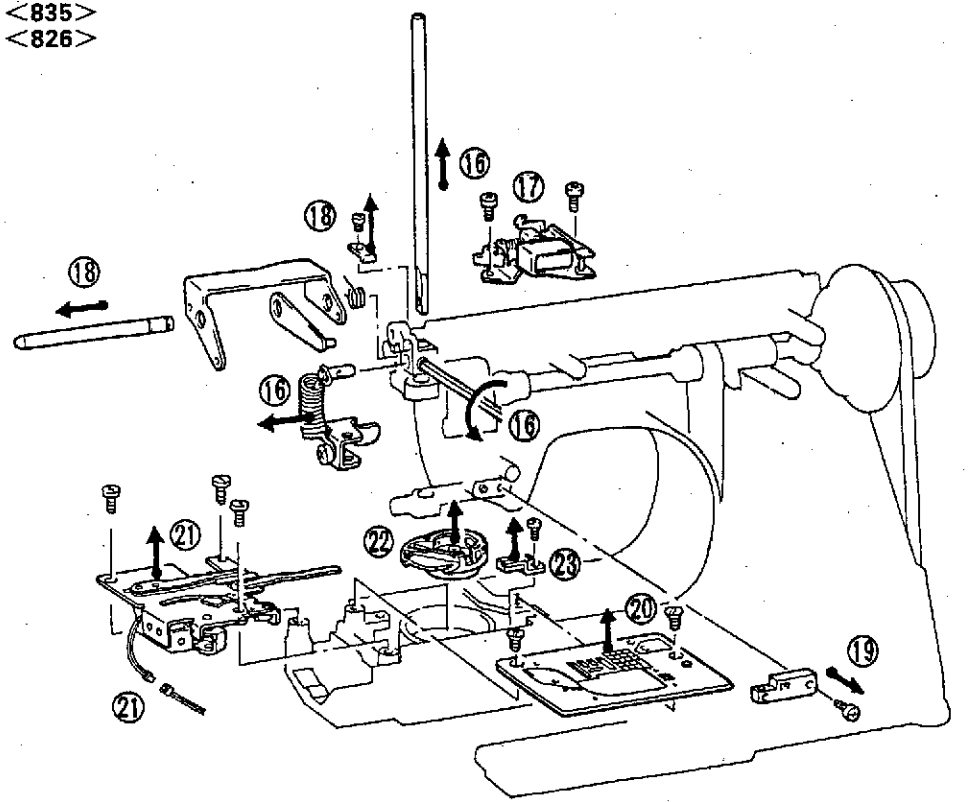


**<825>**

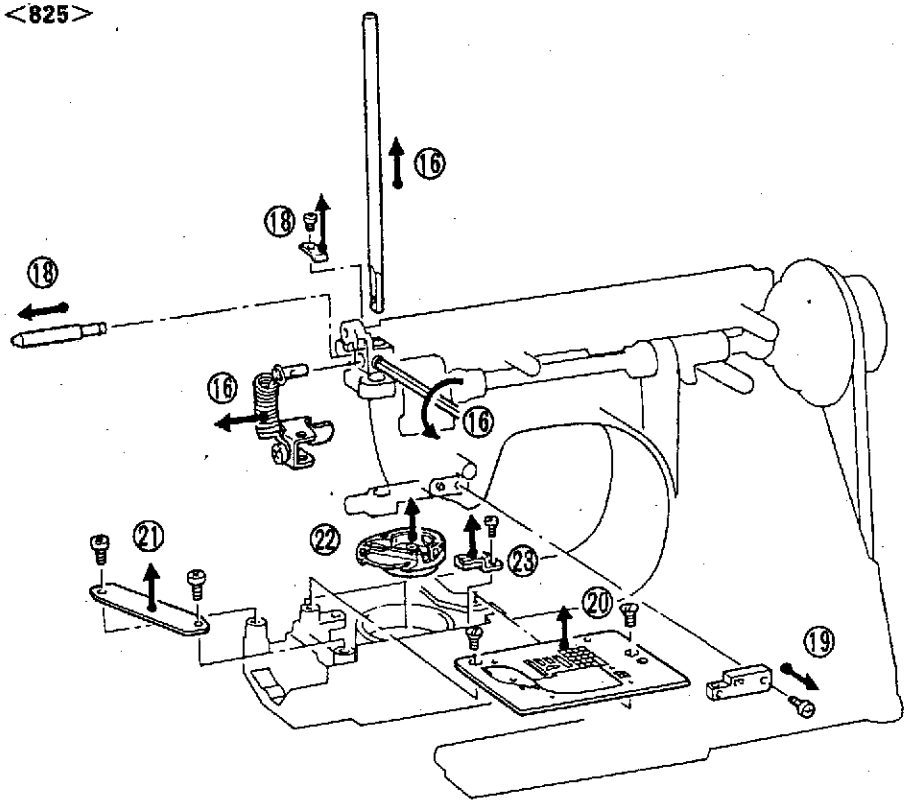

24. Lay the machine on its side, remove the three screws, and then remove the base plate mounting plate.
25. Remove the screw, and then remove the bed cover.
26. Remove the three screws, and then remove the base cover.
27. Remove the belt.
28. Disconnect the connector, remove the two screws of the motor holder, and then remove the motor.
29. Remove the two screws, and then remove the drop lever assembly.
30. Remove the screw, and then remove the switch cover and the power supply unit.

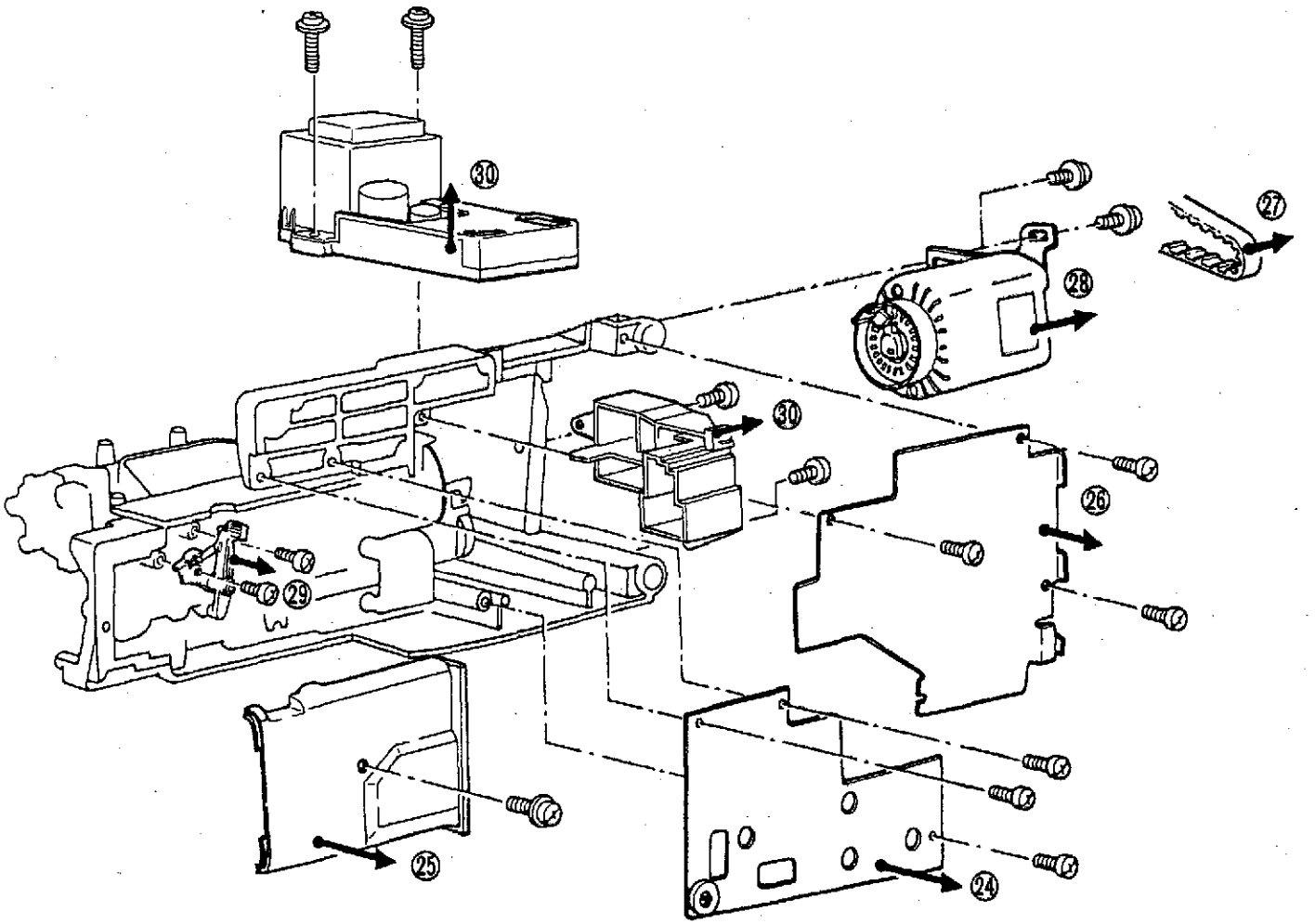

31. Remove the timing belt from the lower shaft pulley, remove the two screws of the upper shaft bushing presser, and then remove the upper shaft.
32. Remove the screw, and then remove the N.P. circuit board.
33. Remove the screw, and then remove the tension releaser. Remove the screw, and then remove the wire guide. <825 has no wire guide.>
34. Remove the screw of the presser plate, and then remove the presser foot lever.
35. Remove the screw, and then remove the tension pulley.
36. Remove the vertical feed spring, remove the two screws, and then remove the base plate.
    Remove the screw, and then remove the lower shaft supporting plate. <835, 826>
37. Remove the four screws of the bushing presser, remove the three screws, and then remove the lower shaft assembly and the feed unit assembly.
38. Remove the screw of the presser plate, and then remove the vertical feed arm.
39. Loosen the screw, take out the shaft, and then remove the outer rotary hook.

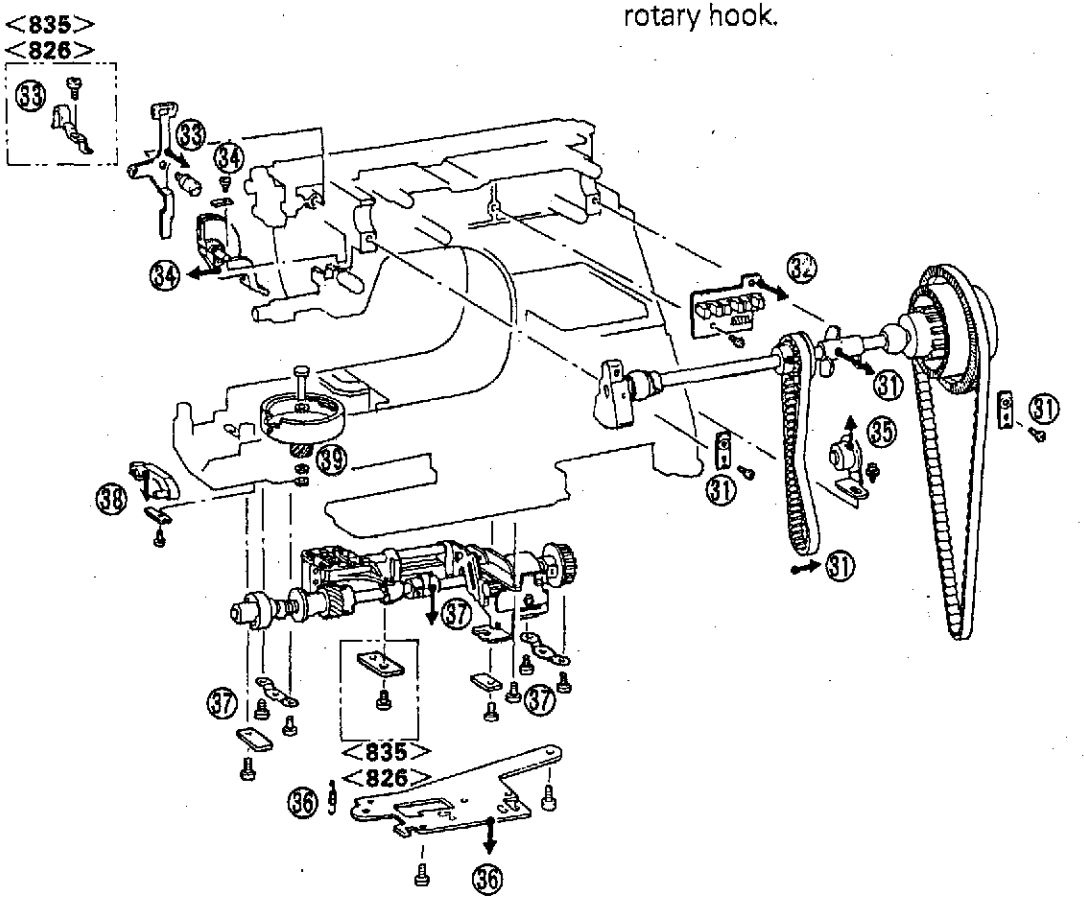

# 3. REASSEMBLING THE MECHANICAL PARTS

40. Install the outer rotary hook with the shaft and the three spacers.
41. Install the vertical feed arm with the presser plate and the screw.
42. Install the feed unit and the lower shaft assembly at the same time with the two bushing pressers, the two presser plates and the seven screws.
    Install the lower shaft supporting plate with the screw. <835, 826>
43. Install the base plate with the two screws.
44. Attach the vertical feed spring.
45. Install the tension pulley with the screw.
46. Install the NP board with the screw.
47. Install the presser foot lever with the presser plate and the screw.
48. Install the tension releaser with the screw, pass the wiring harness through the hole in the wire guide, and then install the wire guide with the screw. <825 has no wire guide.>
49. Place the timing belt on the upper shaft assembly, install with the two presser plate screws, and then set the timing belt onto the upper shaft pulley and the lower shaft pulley.

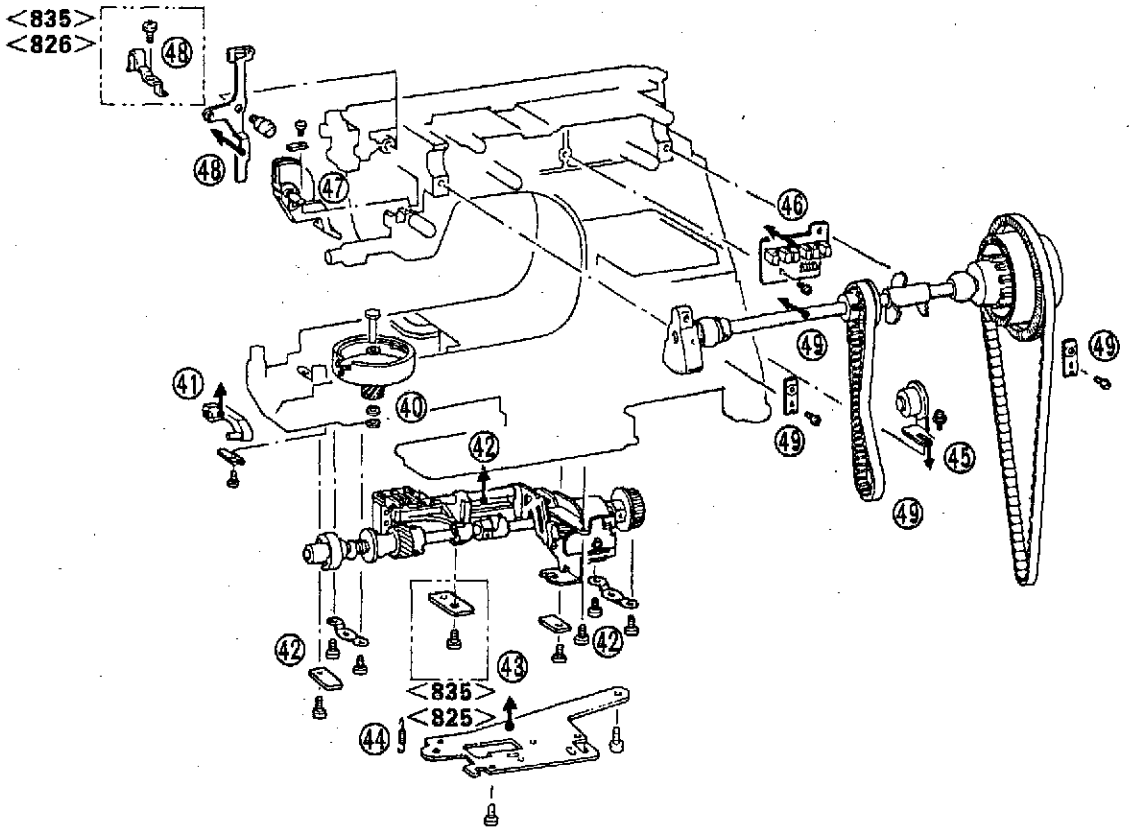

50. Install the power supply unit and the switch cover with the screws.
51. Install the drop lever assembly with the two screws.
52. Connect the motor connector to the power supply unit, set the belt onto the motor and the upper shaft pulley, and then install the motor with the two screws.
53. Install the bed cover with the screw.
54. Install the base cover with the three screws.
55. Install the base plate mounting plate with the three screws.

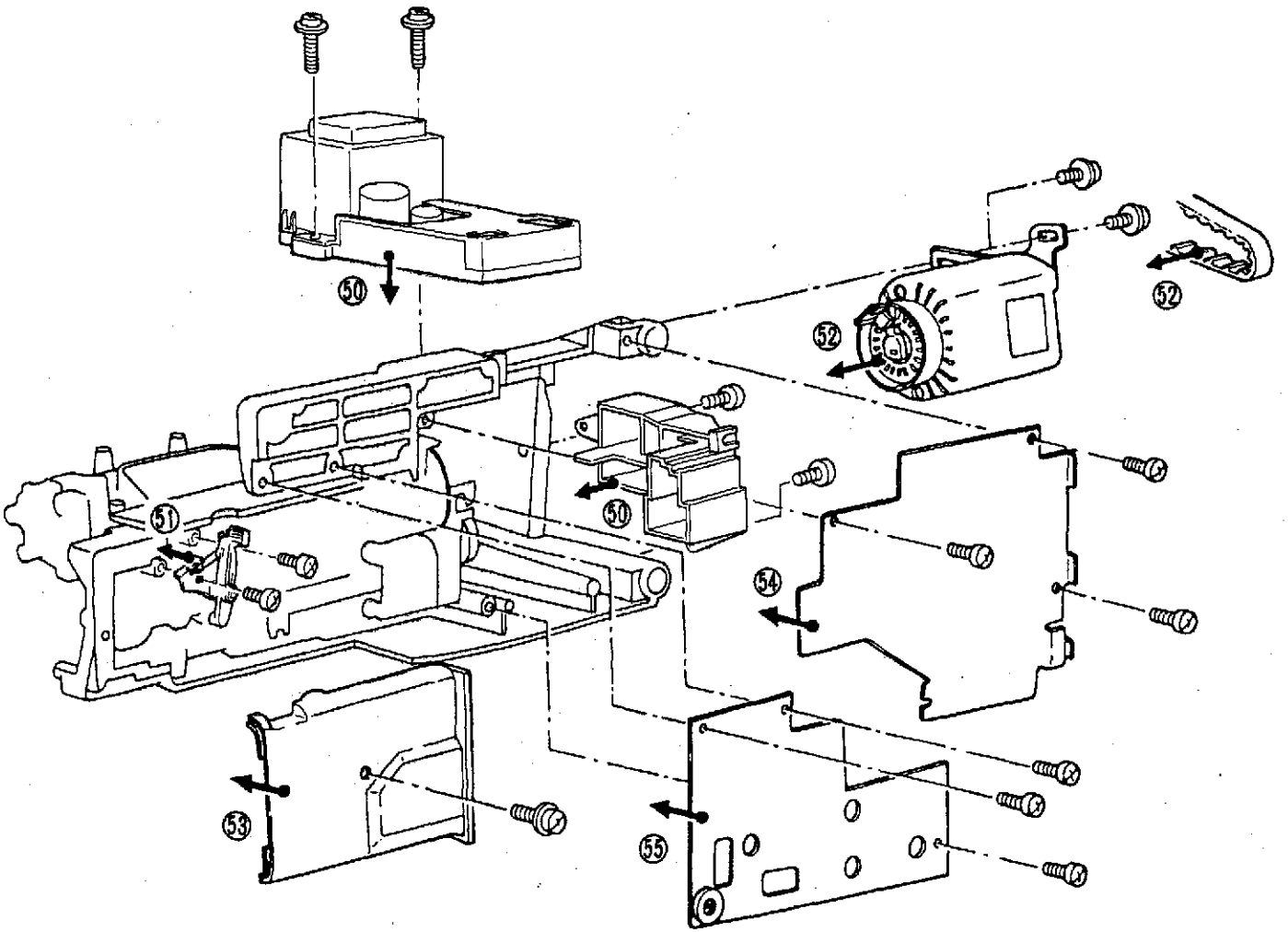

56. Insert the inner rotary hook, and then install the inner rotary hook bracket with the screw.
57. Install the thread cutter unit with the three screws. <835, 826>
    Install the arm cover support with the two screws. <825>
58. Connect the connector of the thread cutter unit. <835, 826>
59. Pass the thread take-up lever stud through the arm, link, spring and the thread take-up link, secure it with the stop ring, and then install it with the presser plate and the screw. <835, 826>
    Pass the thread take-up lever stud through the arm and the thread take-up link, secure it with the stop ring, and then install it with the presser plate and the screw. <825>
60. Insert the presser bar into the presser bar clamp, insert the presser foot spring into the presser foot spring shaft, and then install the presser bar clamp with the set screw.
61. Place the needle bar supporter assembly onto the thread take-up lever stud, insert the shaft of the needle bar clamp into the needle bar crank rod, and then install with the two screws.
62. Insert the needle bar supporter shaft holder into the needle bar supporter pin, and then install the needle bar supporter shaft holder with the screw.
63. Install the needle plate assembly with the two screws.
64. Install the roller opening unit with the two screws, and then attach the spring. <835, 826>

**<835, 826>**

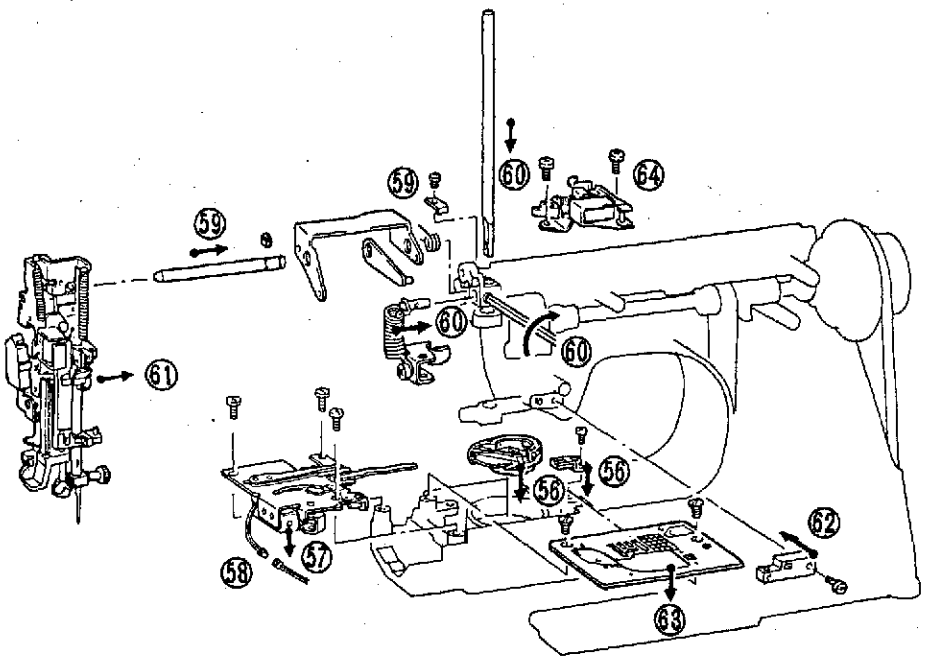


**<825>**

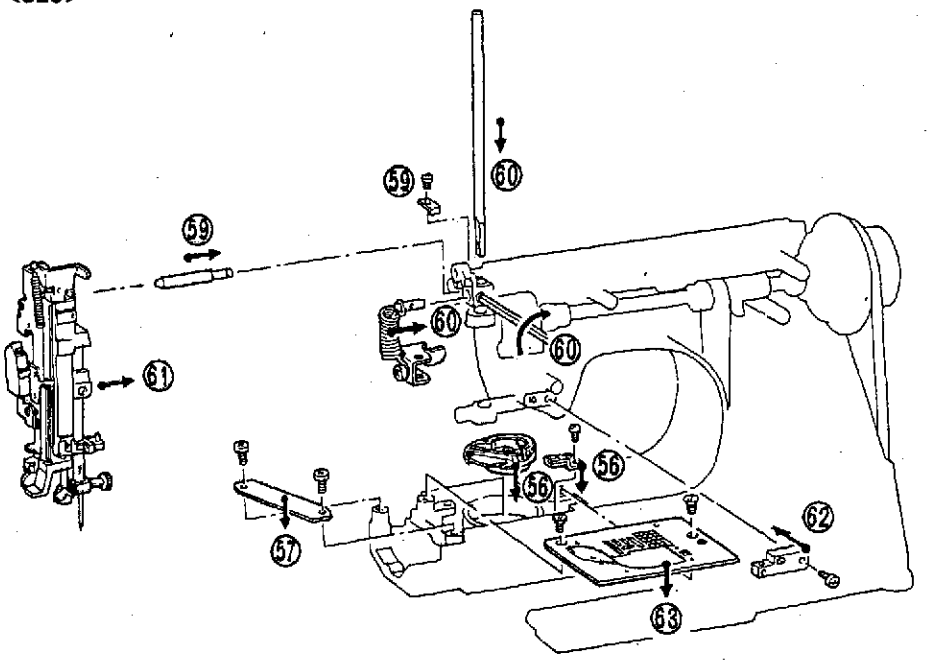

65. Install the left and right handle holders, the thread guide support and the upper P.C. mounting plate with the four screws.
66. Install the zigzag pulse motor holder assembly with the two screws.
67. Install the zigzag lever with the eccentric nut and the screw.
68. Install the bobbin winder assembly with the two screws.
69. Install the lamp holder with the two screws, and then install the presser foot switch holder with the two screws.
70. Install the lower P.C. board mounting plate with the two screws.
71. Install the thread guide plate assembly with the three screws.
72. Install the needle and the presser foot holder with the screw, and then install the zigzag presser foot.
73. Install the main P.C. board with the screw, and then connect the connector.
74. Attach the spring between the presser foot switch holder and tension releaser A. <825>

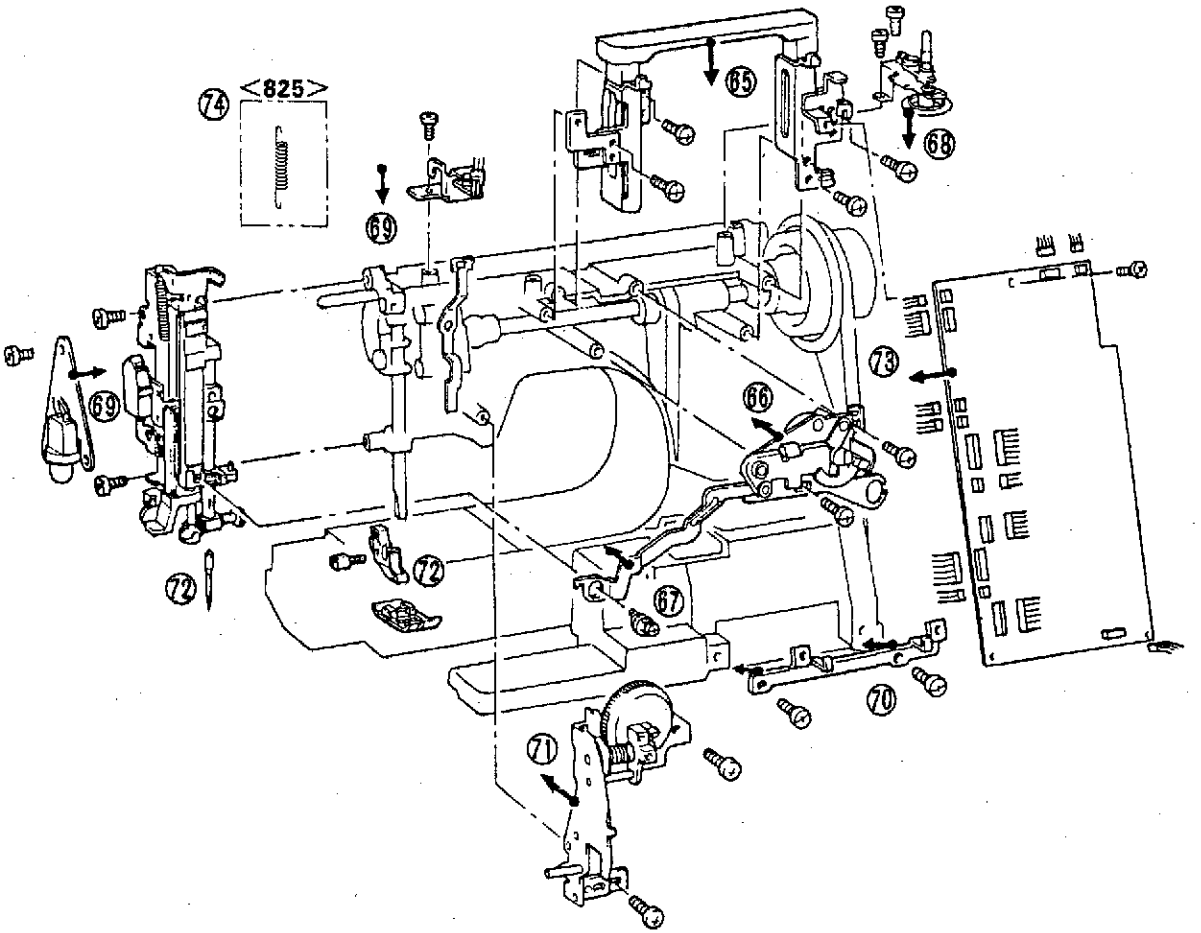

# 4. REASSEMBLING THE EXTERNAL PARTS

75. Insert the free arm cover, and then secure it with the screw.
76. Connect the front cover connector and the flat cable to the main P.C. board.
77. Install the front cover with the screw at the left side of the front cover.
78. install the belt cover with the screw, insert the screw cover, and then install the thread guide cover.
79. Insert the base plate from the left side, attach the pawl onto the base plate mounting plate, and then secure the base plate with the two screws.
80. Install the head cover with the two screws.
81. Install the face plate with the screw.

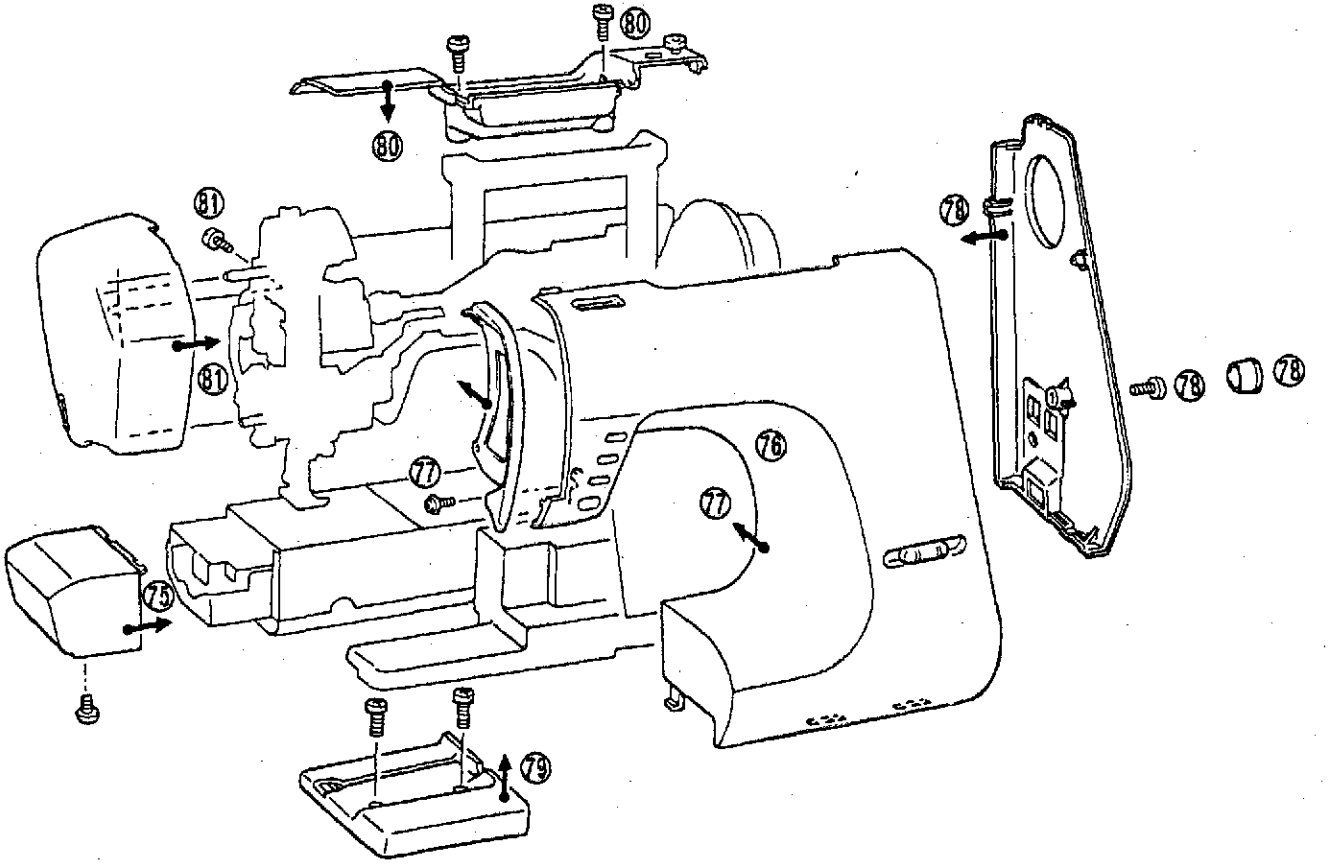

## 5. INSPECTION AFTER OPERATION IS COMPLETED

1. Check that no objects such as screws, nuts or washers have fallen down inside the machine.
2. Check that all screws have been forgotten to be tightened.
3. Check that no screws have been left provisionally tightened.
4. Check that oil has been applied in all the necessary places.

## 6. WIRING HARNESS ARRANGEMENT

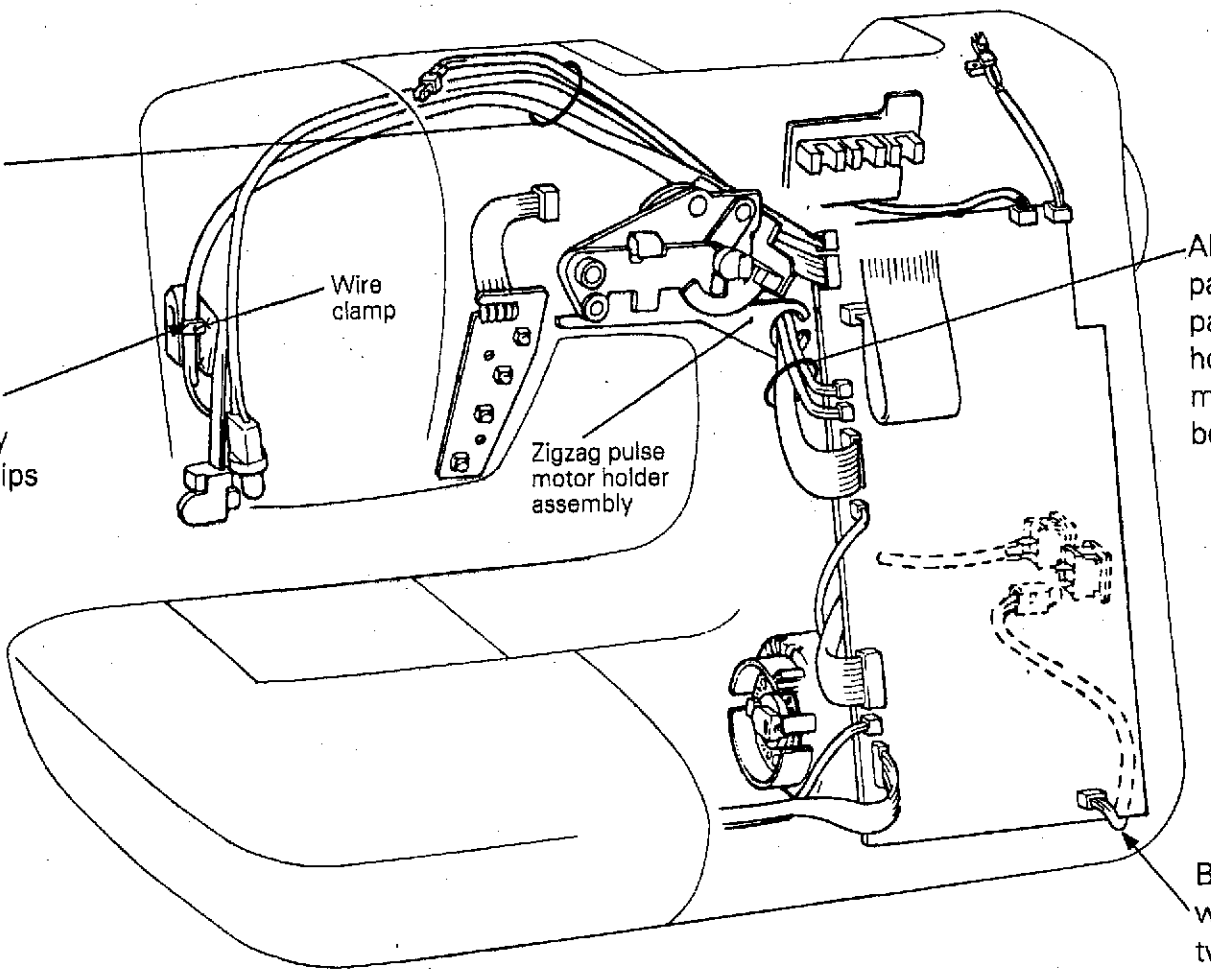

# III. ADJUSTMENT STANDARDS AND ADJUSTMENT PROCEDURES FOR MECHANICAL PARTS

## CONTENTS


1. Test mode setting method <835> ..... 28
2. Test mode setting method <826, 825> ..... 29
3. Initial function setting method <826, 825> ..... 30
4. Tension of timing belt and drive belt ..... 31
5. Timing of needle bar and feed mechanism ..... 32
6. Position of NP shutter ..... 33
7. Needle drop point adjustment <835> ..... 34
8. Needle drop point adjustment <826, 825> ..... 35
9. Timing of needle and rotary hook assembly (Clearance between needle and rotary hook point) ..... 36
10. Height of needle bar ..... 37
11. Height of feed dog ..... 38
12. Height of presser bar ..... 39
13. Buttonhole stitching (Position of buttonhole switch) ..... 40
14. Adjustment of bobbin winding (Adjustment of bobbin winder switch and tension release switch) ..... 41
15. Adjustment of inner rotary hook bracket ..... 42
16. Adjustment of thread tension dial <835, 826> ..... 43
17. Adjustment of thread tension dial <825> ..... 44
18. Adjustment of roller (Automatic thread tension) <835, 826> ..... 45
19. Adjustment of inner rotary hook tension ..... 46
20. Adjustment of pattern <835> ..... 47
21. Adjustment of pattern <826, 825> ..... 48
22. Needle threader ..... 49
23. Needle threader (Simple check of hook operation) ..... 50
24. Needle threader (Replacement) ..... 50
25. Needle threader (Standard position of hook) ..... 51
26. Needle threader (Vertical position of hook) ..... 52
27. Side cutter adjustment (Meeting of upper knife and lower knife) ..... 53
28. Side-cutter adjustment (Clearance between upper knife and lower knife) ..... 54

# 1. TEST MODE SETTING METHOD <835>

### STANDARD

Turn on the power while pressing down both the (+) and (−) manual zigzag width keys simultaneously. After that, each test mode can be executed by pressing the corresponding key for that pattern.

### ADJUSTMENT

1. Turn on the power while pressing down both the (+) and (−) manual zigzag width keys simultaneously to set the test mode.
2. Press the left-side straight reference line key. "TEST" and "00" will be displayed on the LCD, the initial setting data will be reset in memory, and the initial setting program for the feed pulse motor and zigzag pulse motor will be set.
3. Each time the initial setting program for the feed pulse motor and zigzag pulse motor are reset, the needle drop point data stored up until that time will be erased. This means that it is necessary to reset the needle drop point, so press the triple stitch key to display the needle drop point setting.
4. Press the (−) manual zigzag width key (0·····−5) and the (+) manual zigzag width key (0·····+5) to adjust each needle drop point with respect to the left and right needle plate holes. (Refer to page 34.)
5. Press the (+) and (−) stitch length keys and check that the needle drop points at the left and right sides of the needle plate hole are symmetrical with respect to each other.

※ Always be sure to check the needle drop points after resetting the initial setting program for the feed pulse motor and zigzag pulse motor.

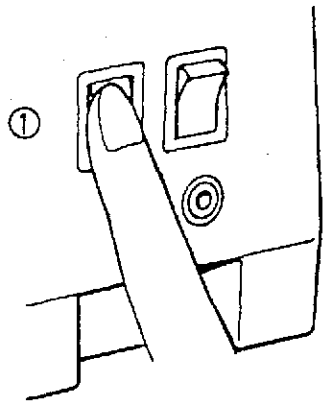


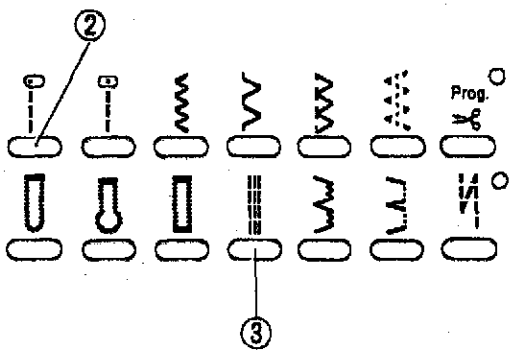


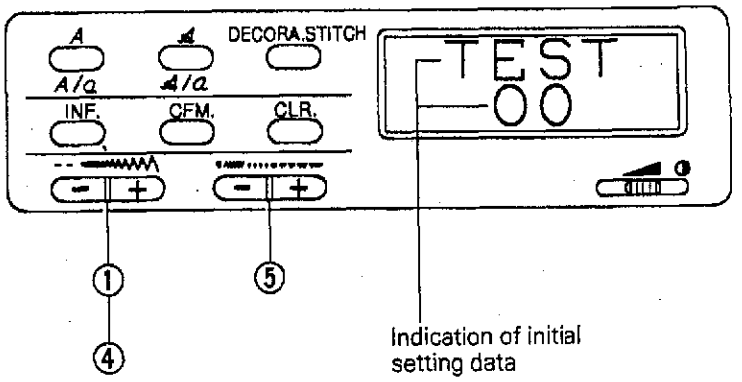

# 2. TEST MODE SETTING METHOD <826, 825>

## STANDARD

Turn on the power while pressing down both the manual zigzag and feed buttons simultaneously. After that, the respective test mode can be executed by selecting a number with the shift keys.

## ADJUSTMENT

1. Turn on the power while pressing down both the manual zigzag and feed buttons simultaneously to set the test mode.
2. Select "00" with the shift keys, and then press the memory key. The initial setting data will be reset in memory, and the initial setting program for the feed pulse motor and zigzag pulse motor will be set.
3. Each time the initial setting program for the feed pulse motor and zigzag pulse motor are reset, the needle drop point data stored up until that time will be erased. This means that it is necessary to reset the needle drop point, so input "01" using the shift keys and then press the memory key to display the needle drop point setting.
4. Press the clear key (0·····-5) and the alphabet selection key (0·····+5) to adjust each needle drop position with respect to the left and right needle plate holes. (Refer to page 35.)
5. Press the manual zigzag button and check that the needle drop points at the left and right sides of the needle plate hole are symmetrical with respect to each other.

※ Always be sure to check the needle drop points after resetting the initial setting program for the feed pulse motor and zigzag pulse motor.

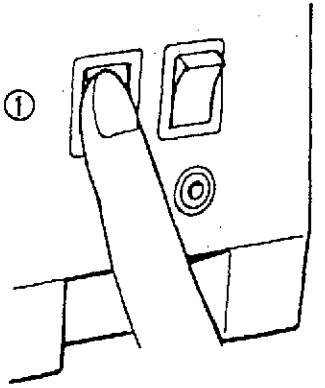


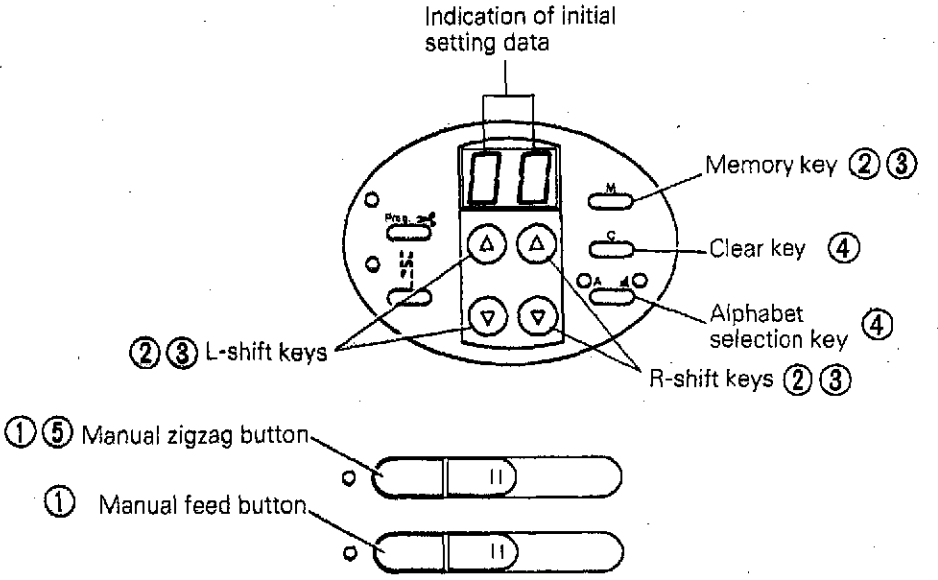

# 3. INITIAL FUNCTIONAL RANGE SETTING METHOD <826, 825>

After replacing the main P.C. board assembly in the 826 and 825 models, it is necessary to reset the initial functional range.

**SETTING PROCEDURE**

1. Turn on the power while pressing down both the manual zigzag and feed buttons simultaneously.
2. Select "03" using the shift keys.
3. <For the 826 model>
   After pressing the memory key, press the clear key or the alphabet selection key so that "0" is displayed.
   <For the 825 model>
   After pressing the memory key, press the clear key or the alphabet selection key so that "1" is displayed.
4. Press the memory key once more. This completes the initial functional range setting.
   ※ During normal operation, the 826 model will be "needle down position stop" and the 825 model will be "needle up position stop" when the machine is started or stopped.

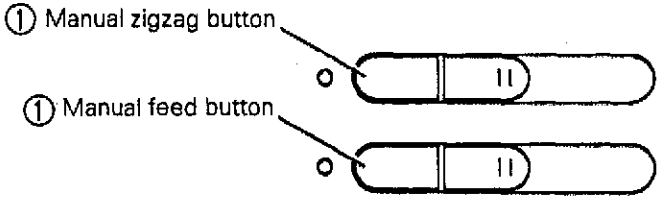


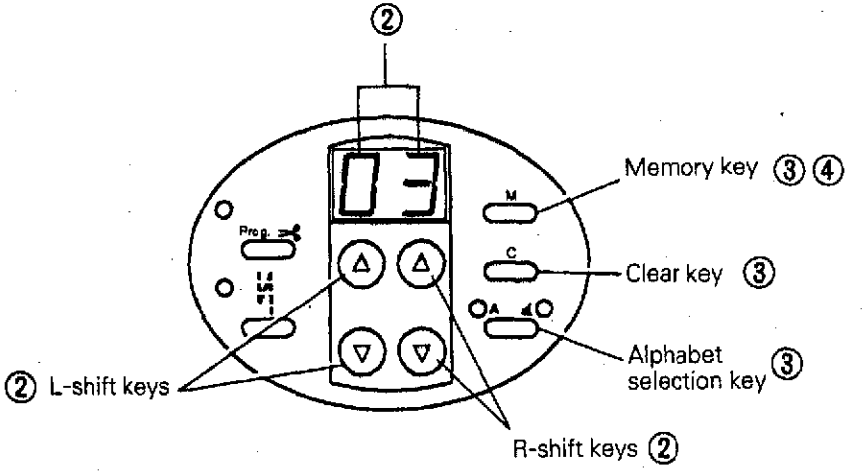

# 4. TENSION OF TIMING BELT AND DRIVE BELT

## STANDARD

When the center of the drive belt between the upper shaft pulley and the motor shaft pulley is pushed gently with a finger with a force of approximately 200 g as shown in the illustration, there should be 4 ~ 6 mm (0.16 ~ 0.24 in.) of slack in the drive belt. When the timing belt is similarly pushed, there should be a slack of 3 ~ 5 mm (0.12 ~ 0.16 in.) in the timing belt.

## ADJUSTMENT

- Timing belt
  1. Loosen the screw of the tension pulley.
  2. Move the tension pulley to adjust the tension of the timing belt.
  3. Tighten the screw of the tension pulley.
- Drive belt
  1. Loosen the two screws of the motor holder.
  2. Move the motor holder to adjust the tension of the drive belt.
  3. Tighten the two screws of the motor holder.

**Timing belt adjustment**

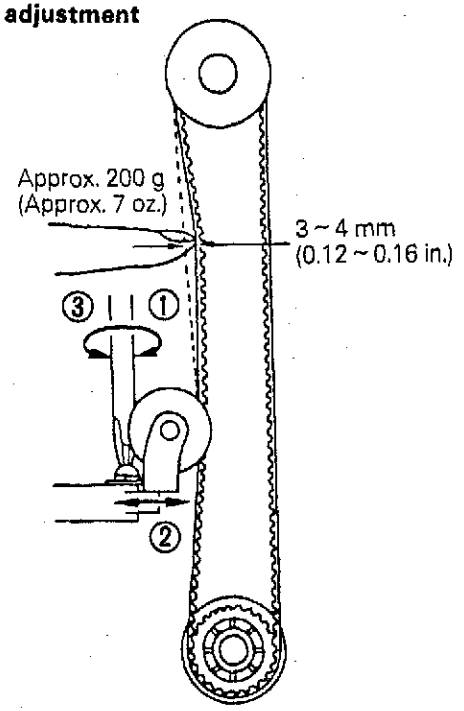


**Drive belt adjustment**

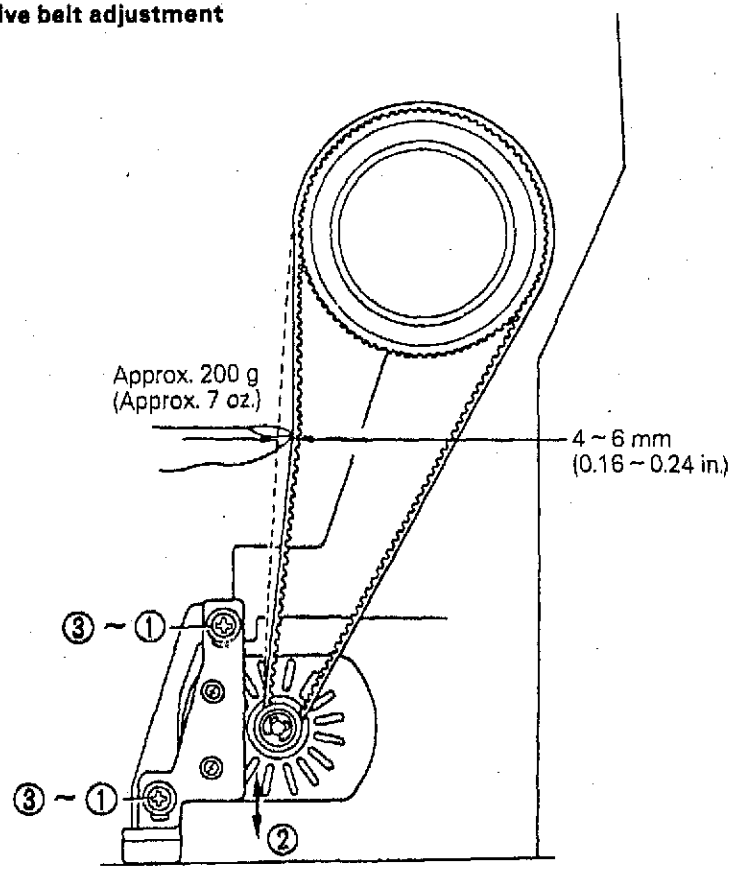

# 5. TIMING OF NEEDLE BAR AND FEED MECHANISM

## STANDARD

The needle bar should be −4° from its highest position when the pin is in the hole of the thread cutter cam shaft.

## ADJUSTMENT

1. Align the holes of the thread cutter cam shaft and the supporter base shaft, and then insert the 3 mm (0.12 in.) pin into the holes.
2. Loosen the screw of the upper timing pulley, and then turn the pulley to move the needle bar so that it is −4° from its highest position.
3. Tighten the screw of the upper timing pulley.

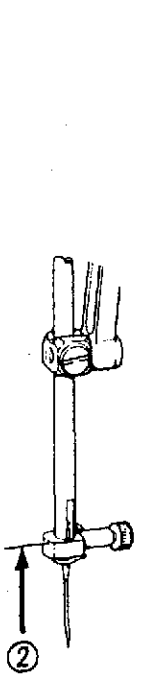


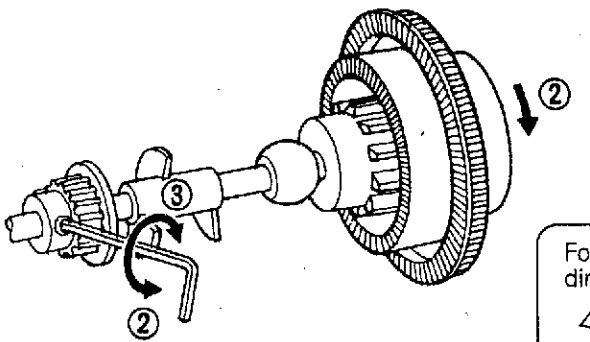


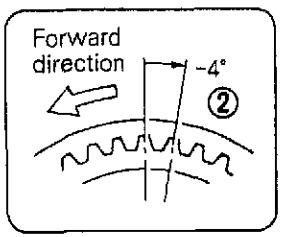


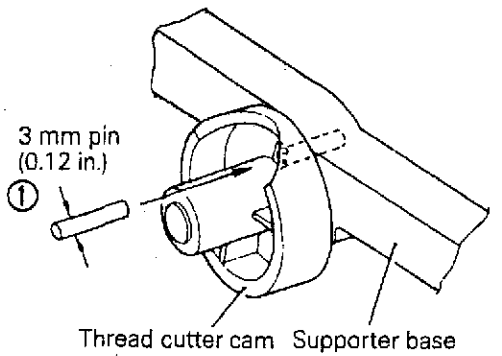


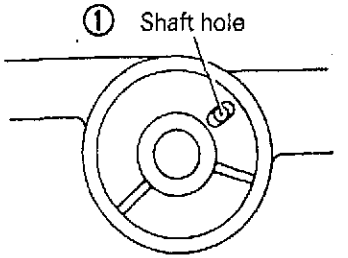

# 6. POSITION OF NP SHUTTER

## STANDARD

When the needle bar is at its lowest position, the NP shutter should be positioned so that the screw is facing toward the front of the machine (0°±1°).

## ADJUSTMENT

1. Turn the upper shaft pulley to lower the needle bar to its lowest position.
2. Loosen the screw of the NP shutter.
3. Move the NP shutter so that the screw faces toward the front of the machine.
4. Tighten the screw of the NP shutter.
   NOTE: The side of the NP shutter should not touch the photo interrupter. Turn the upper shaft pulley to check this.

※ To visually determine the standard position, choose a zigzag pattern, lift up the presser foot lever and turn the upper shaft pulley manually. Adjust the NP shutter so that the needle moves left and right when the tip of the needle passes the lower side of the presser foot [approximately 6 mm (approx. 0.24 in.) above the needle plate].

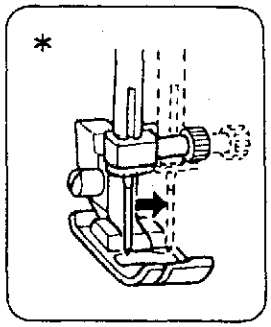


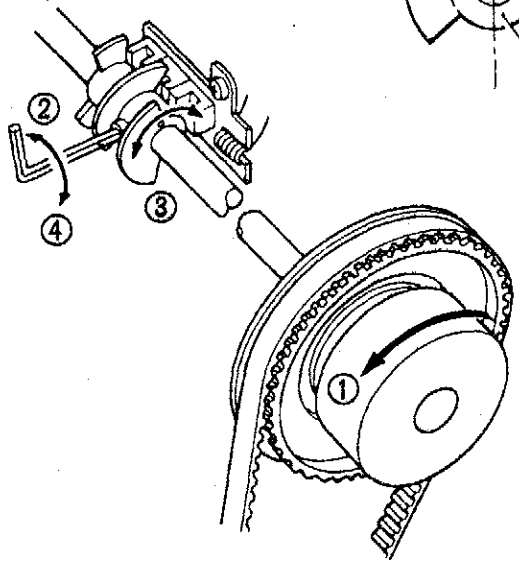


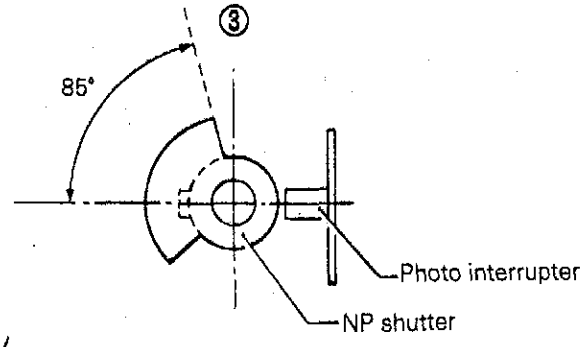


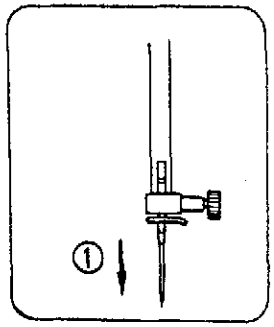

# 7. NEEDLE DROP POINT ADJUSTMENT <835>

## STANDARD

The needle drop points at the left and right sides of the needle plate hole should be symmetrical with respect to each other.

## ADJUSTMENT

1. Loosen the lock nut and turn the eccentric stud of the zigzag connecting rod to its highest position.
2. While pressing down both the (+) and (−) manual zigzag width keys simultaneously, turn on the power.
3. Press the manual triple stitch key.
4. Turn the upper shaft pulley to lower the needle so that its point is just above the needle plate.
5. Alternately press the (+) and (−) stitch length keys and check that the needle drop points at the left and right sides of the needle plate hole are symmetrical with respect to each other.
6. If they are not symmetrical, adjust by pressing the (+) and (−) manual zigzag width keys.

※ Repeat steps 5 and 6 until the needle drop point is correct.

※ The zigzag pulse motor holder assembly should be installed in the center of the mounting hole.

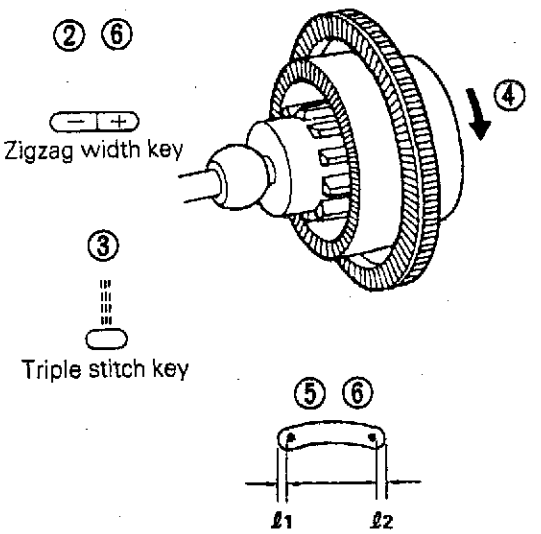


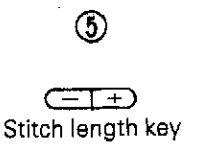


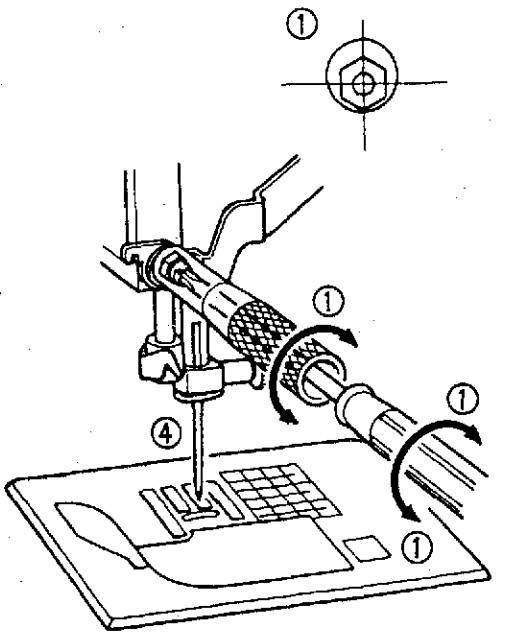

# 8. NEEDLE DROP POINT ADJUSTMENT <826, 825>

## STANDARD

The needle drop points at the left and right sides of the needle plate hole should be symmetrical with respect to each other.

## ADJUSTMENT

1. Loosen the lock nut and turn the eccentric stud of the zigzag connecting rod to its highest position.
2. While pressing down both the manual feed and manual zigzag buttons simultaneously, turn on the power.
3. Select "01", and then press the memory key.
4. Turn the upper shaft pulley to lower the needle so that its point is just above the needle plate.
5. Press the manual zigzag buttons and check that the needle drop points at the left and right sides of the needle plate hole are symmetical with respect to each other.
6. If they are not symmerical, adjust by pressing the clear key (0·····-5) and the alphabet selection key (0·····+5).

※ Repeat steps 5 and 6 until the needle drop point is correct.

※ The zigzag pulse motor holder assembly should be installed in the center of the mounting hole.

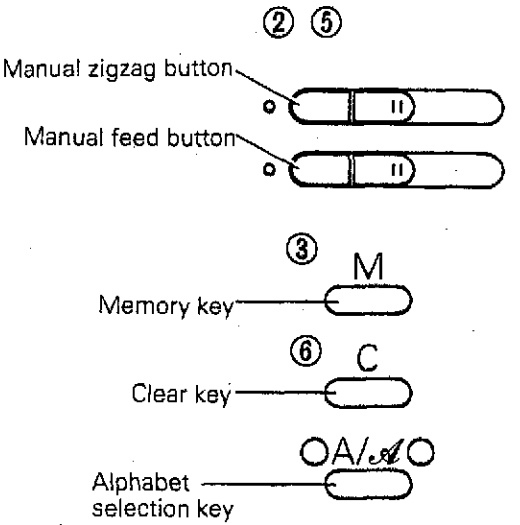


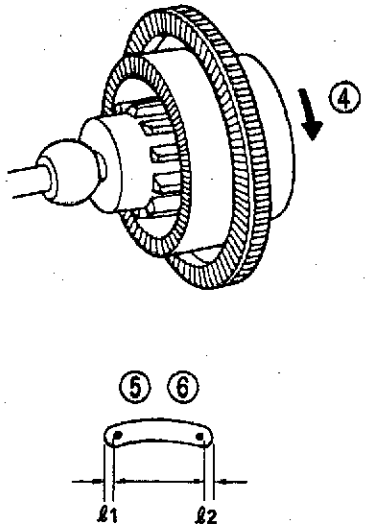


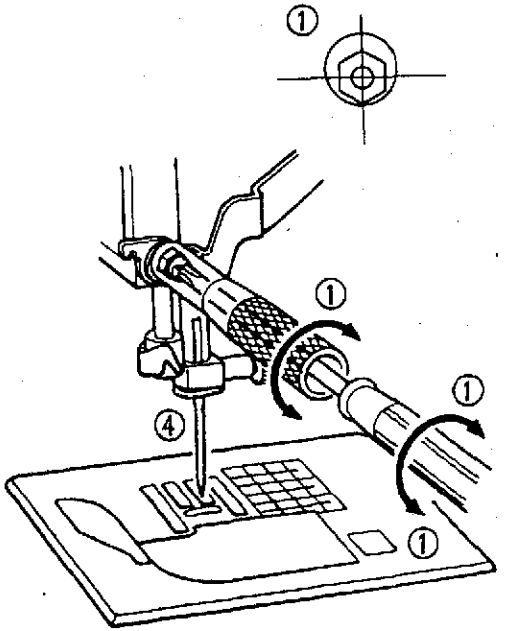

# 9. TIMING OF NEEDLE AND ROTARY HOOK ASSEMBLY (CLEARANCE BETWEEN NEEDLE AND ROTARY HOOK POINT)

## STANDARD

When the timing test mode has been selected and the needle is raised 2.9 ~ 3.3 mm (0.11 ~ 0.13 in.) from its lowest position, the rotary hook point should be aligned with the side of the needle. Furthermore, the clearance between the needle (#11) and the rotary hook point at this time should be 0.1 mm or less on both sides without the hook point touching the needle.

## ADJUSTMENT

1. While pressing down both the (+) and (-) manual zigzag width keys simultaneously, turn on the power. <835>
   While pressing down both the manual zigzag and manual feed buttons simultaneously, turn on the power. <826, 825>
2. Press the program thread cutting key to align the needle and rotary hook point. <835>
   Select "07" with the shift key. <826, 825>
3. Loosen the three screws of the lower shaft gear.
4. Adjust the phase of the rotary hook and the raising of the needle. (Adjust so that the rotary hook point is aligned with the side of the needle when the needle is raised 2.9 ~ 3.3 mm (0.11 ~ 0.13 in.) from its lowest position.)
5. Tighten the three screws of the lower shaft gear.
6. Loosen the needle clearance adjustment nut.
7. Turn the needle clearance adjustment eccentric screw to adjust so that the clearance between the side of the needle and the rotary hook point is 0.1 mm (0.004 in.) or less on both sides, and check that the hook point does not touch the needle.
8. Tighten the needle clearance adjustment nut.

   NOTE: If complete adjustment is not possible by turning the eccentric nut only within one half of a revolution, loosen the adjusting collar screw and move the needle bar supporter shaft A backwards or forwards to adjust.

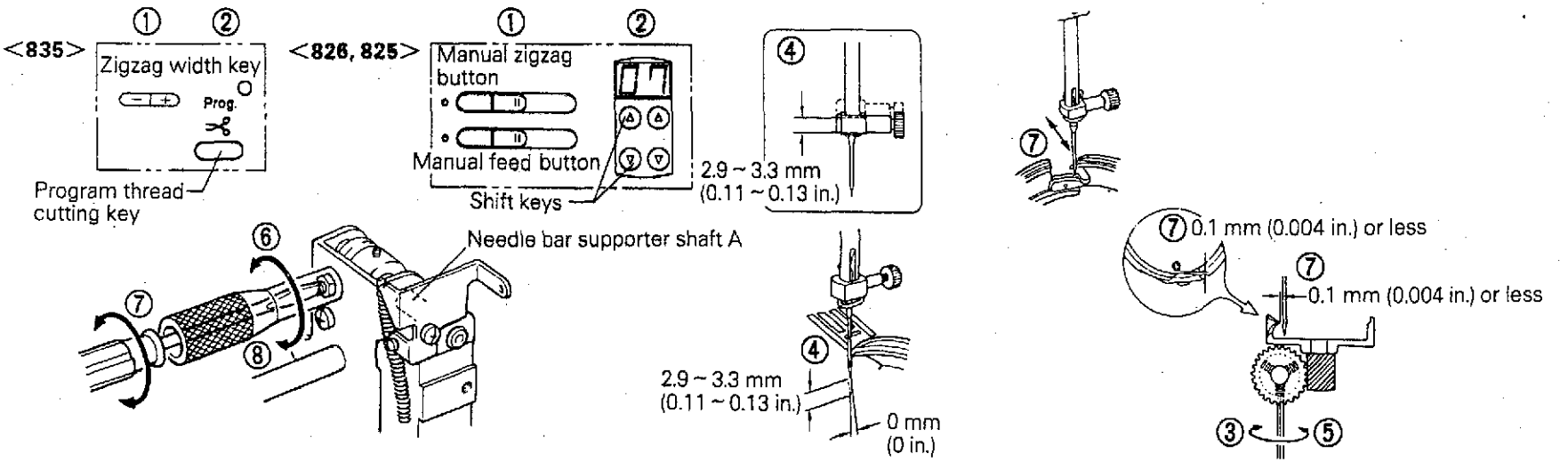

# 10. HEIGHT OF NEEDLE BAR

## STANDARD

When the timing test mode has been selected and the rotary hook point is aligned with the side of the needle, the distance from the top edge of the needle eye to the bottom edge of the rotary hook point should be within 0.9 ~ 1.3 mm (0.035 ~ 0.051 in.).

## ADJUSTMENT

1. While pressing down both the (+) and (−) manual zigzag width keys simultaneously, turn on the power. <835>
   While pressing down both the manual zigzag and manual feed buttons simultaneously, turn on the power. <826, 825>
2. Press the program thread cutting key to align the needle and rotary hook point. <835>
   Select "07" with the shift key. <826, 825>
3. Turn the upper shaft pulley to set so that the rotary hook point is aligned with the side of the needle.
4. Loosen the screw of the needle bar clamp.
5. Move the needle bar up or down so that the aforementioned distance is 0.9 ~ 1.3 mm (0.035 ~ 0.051 in.).
6. Tighten the screw of the needle bar clamp.

   NOTE: Because the needle bar may become a hindrance to sewing if it can turn too easily, make sure that the needle bar clamp is parallel to the side of the needle plate after adjusting the height of the needle bar.

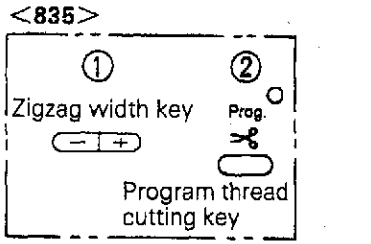


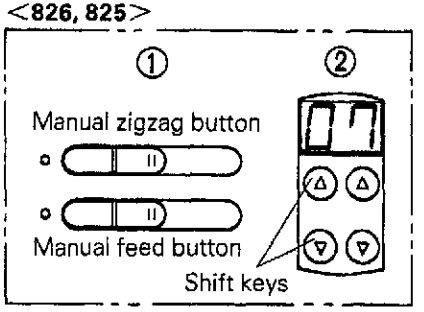


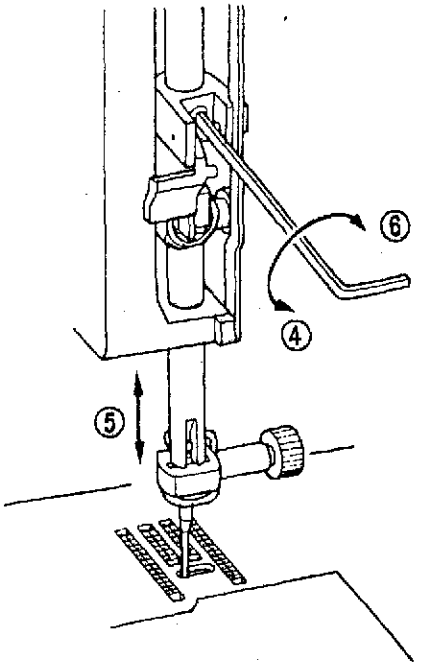


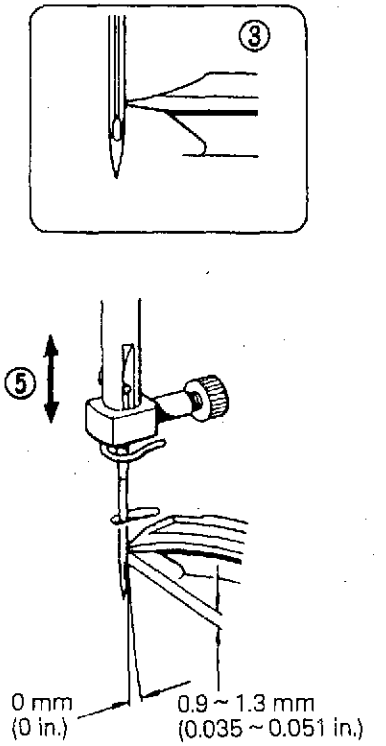

# 11. HEIGHT OF FEED DOG

### STANDARD

When the upper shaft pulley is turned to raise the feed dog to its highest position, the standard height of the feed dog above the needle plate should be 0.9 ~ 1.1 mm (0.035 ~ 0.043 in.).

### ADJUSTMENT

1. Turn the upper shaft pulley to raise the feed dog to its highest position.
2. Loosen the screw of the vertical feed roller shaft, and then turn the vertical feed roller shaft to adjust the feed dog height to within 0.9 ~ 1.1 mm (0.035 ~ 0.043 in.).
3. Tighten the screw of the vertical feed roller shaft.

   NOTE:
   - The eccentric nut of the vertical feed shaft should be at the back after adjustment.
   - The drop lever should be at the left while carrying out adjustment.

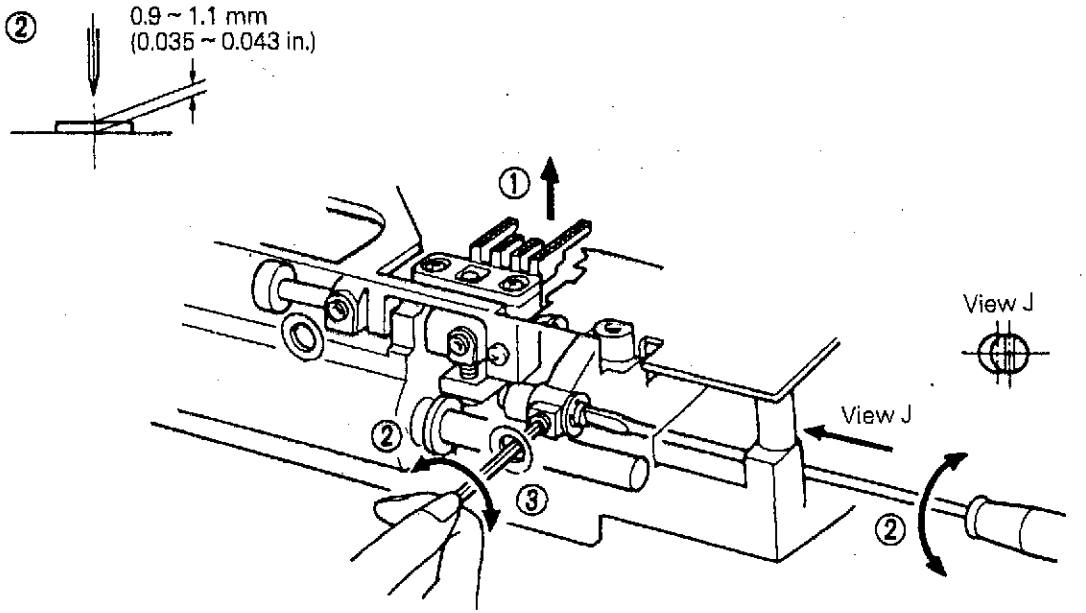

# 12. HEIGHT OF PRESSER BAR

## STANDARD

The standard height of the presser bar should be such that the distance from the top of the needle plate to the bottom of the presser foot is 6.0 ~ 6.5 mm (0.24 ~ 0.25 in.).

## ADJUSTMENT

1. Raise the presser foot lifter.
2. Loosen the screw of the presser bar guide bracket.
3. Move the presser bar up or down to adjust the height.
4. Tighten the screw of the presser bar guide bracket.

NOTE: Make sure that the presser foot and the feed groove of the needle plate are parallel.

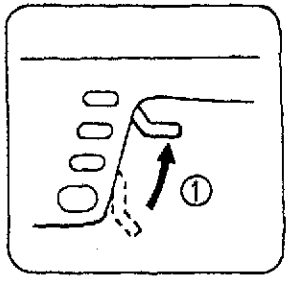


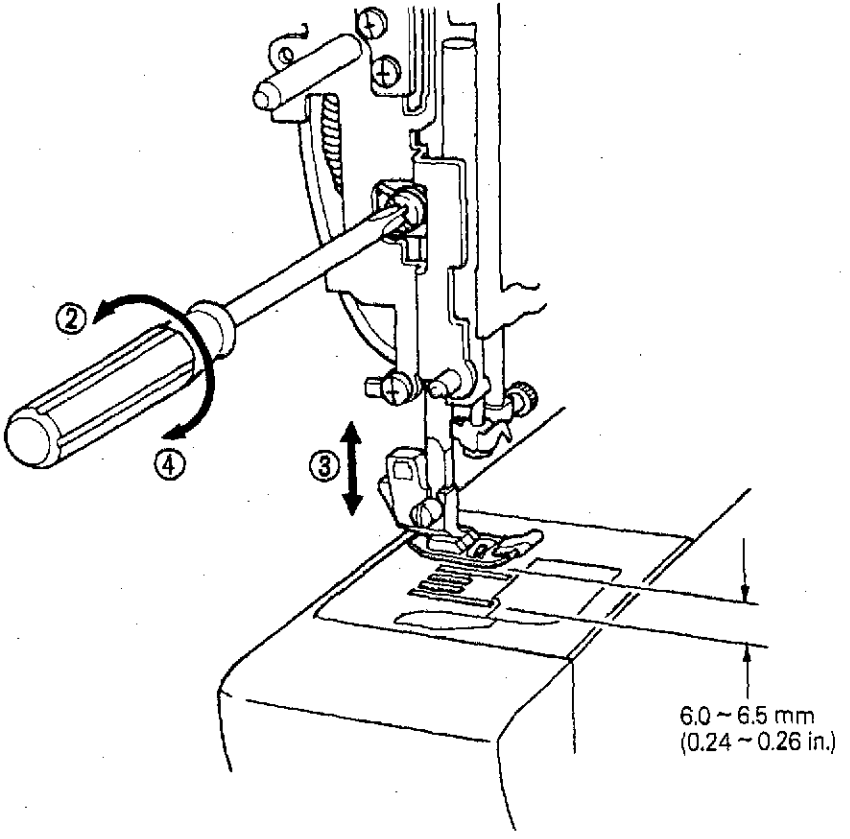

# 13. BUTTONHOLE STITCHING (POSITION OF BUTTONHOLE SWITCH)

## STANDARD

The contacts BH 0 and BH 1 of the buttonhole switch should touch when the buttonhole lever is lowered, the clearance at the front of buttonhole stitch presser foot (A) is 1.5 mm (0.06 in.) and the presser foot lifter lever is lowered.

## ADJUSTMENT

1. Turn on the power and select the "Bar Tack" pattern. <835>
   Turn on the power and select "07" with shift key. <826, 825>
2. Replace the presser foot with buttonhole stitch presser foot (A) so that the clearance at the front of buttonhole presser foot (A) is 1.5 mm (0.06 in.), and then lower the presser foot lifter lever.

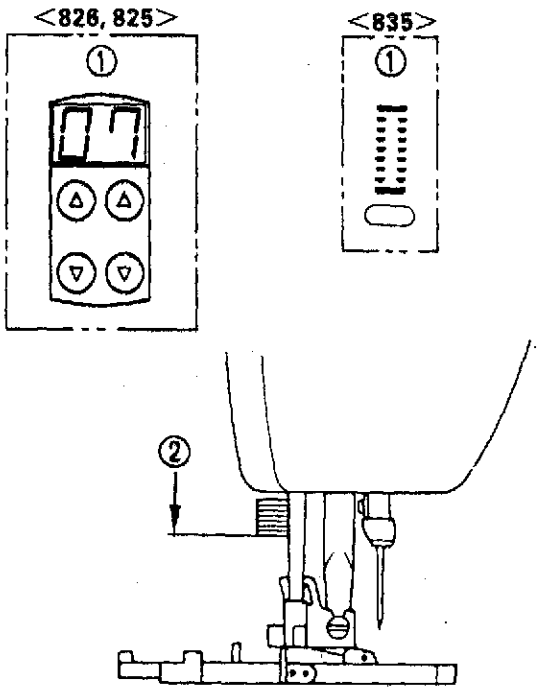


3. Loosen the screw of the buttonhole lever.
4. Adjust the position of the buttonhole lever.
5. Tighten the screw of the buttonhole lever.

NOTE: If the length of the buttonhole stitch is too short, bend BH 1 so that it is further away from BH 0, and if the length of the stitch is too long, bend BH 2 so that it is closer to BH 0.

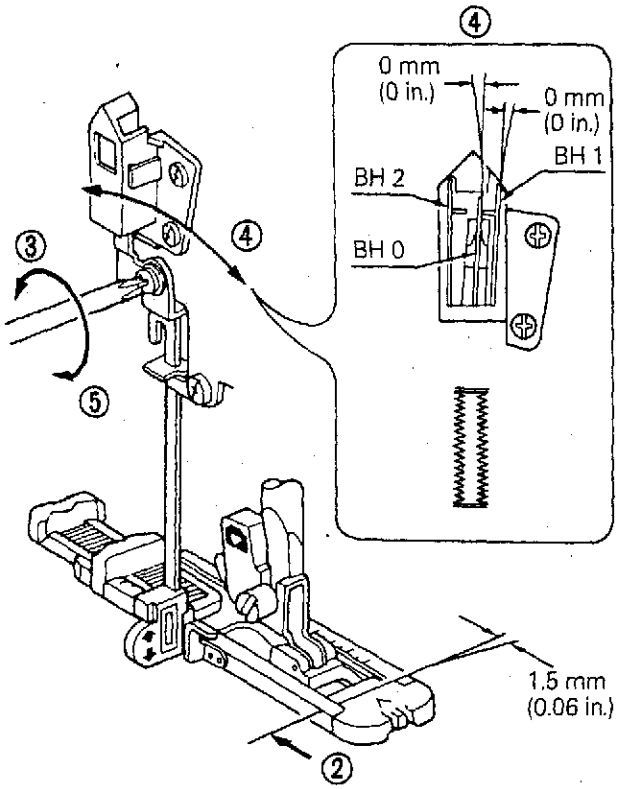

# 14. ADJUSTMENT OF BOBBIN WINDING (ADJUSTMENT OF BOBBIN WINDER SWITCH AND TENSION RELEASE SWITCH)

## STANDARD

The thread should be wound parallel onto the bobbin, and the thread should take up 85 ~ 90% of the outside diameter of the bobbin when it is wound on at the lowest speed. In addition, the clearance between the bobbin winder switch and the bobbin winder shaft support should be within 0.5 ~ 1.0 mm (0.02 ~ 0.04 in.), and the clearance between the tension release switch and the tension releaser should be within 2 ~ 3 mm (0.08 ~ 0.12 in.).

## ADJUSTMENT

1. If the thread winding is unbalanced, slightly loosen the screw of the bobbin thread winding guide.
2. Move the bobbin thread winding guide up or down so that the thread is wound evenly onto the bobbin.
3. Tighten the screw of the bobbin thread winding guide.
4. When changing the bobbin thread winding amount, slightly loosen the screw of the bobbin presser.
5. Turn the bobbin presser to adjust the bobbin thread winding amount.
6. Tighten the screw of the bobbin presser.
7. Loosen the screw of the bobbin winder switch and the screw of the tension release switch.
8. Adjust so that the clearance for the bobbin winder switch is 0.5 ~ 1.0 mm (0.02 ~ 0.04 in.) and the clearance for the tension release switch is 2 ~ 3 mm (0.08 ~ 0.12 in.).
9. Tighten the screw of the bobbin winder switch and the screw of the tension release switch.

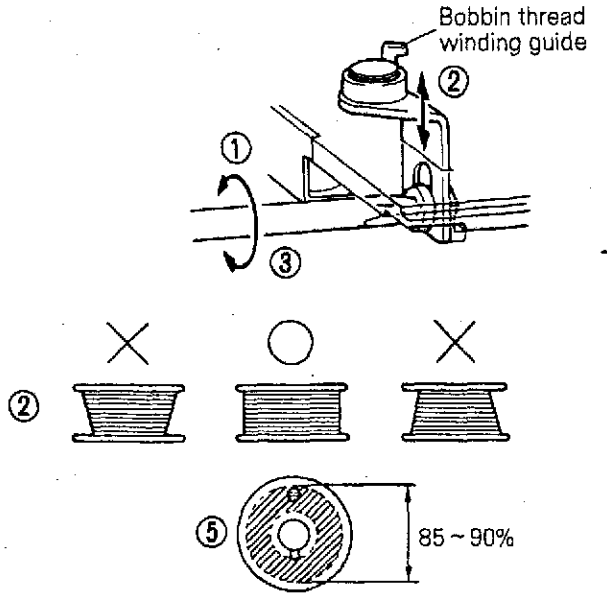


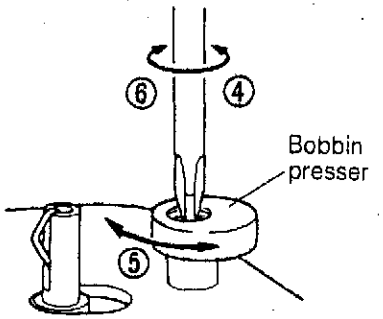


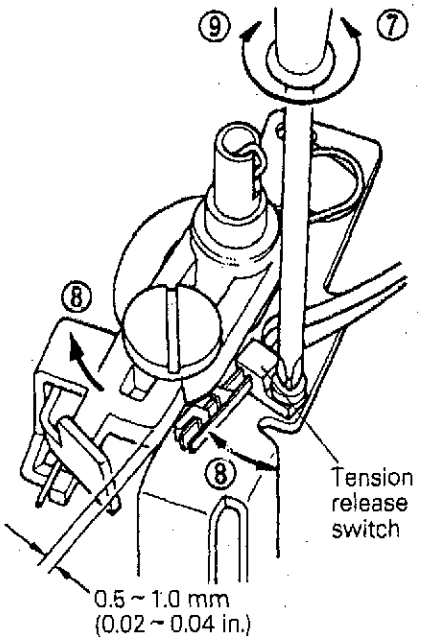


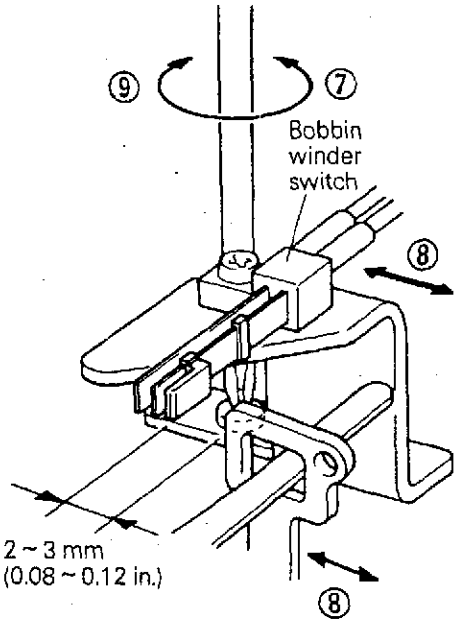

# 15. POSITION OF INNER ROTARY HOOK BRACKET

## STANDARD

When the inner rotary hook bracket and the rotary hook meet, the spring of the inner rotary hook bracket and the inner rotary hook should overlap each other by 1.9 ~ 2.1 mm (0.075 ~ 0.083 in.).

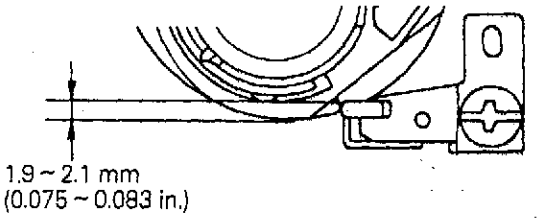


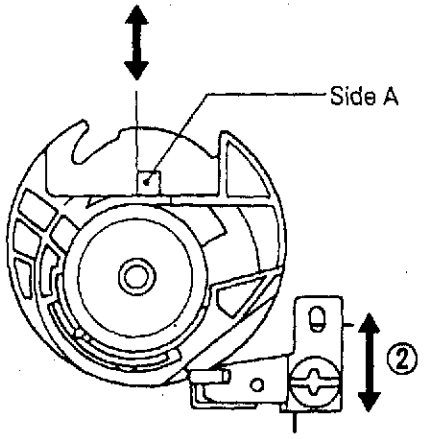


## ADJUSTMENT

1. Loosen the screw securing the inner rotary hook bracket.
2. Adjust the position of the inner rotary hook bracket by moving it vertically and/or horizontally.

   NOTE: Surface A of the inner rotary hook bracket should be perpendicular to the feeding direction.
3. Tighten the screw of the inner rotary hook bracket.

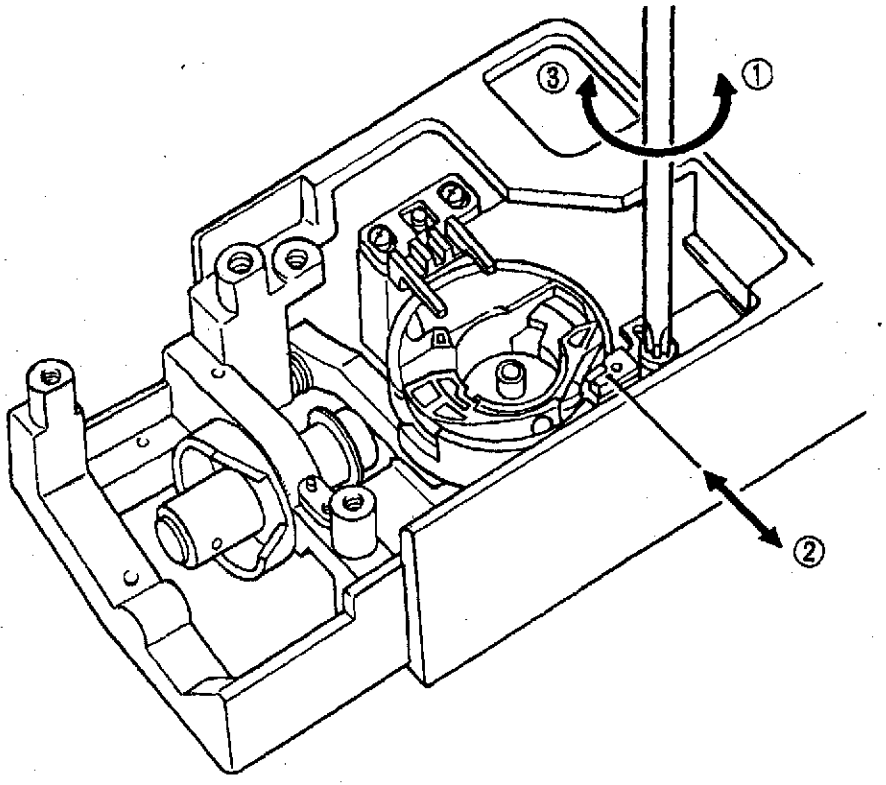

# 16. ADJUSTMENT OF THREAD TENSION DIAL <835, 826>

## STANDARD

When the presser foot is lowered and the thread tension dial is set to the center (automatic thread tension) position, the tension between the thread tension discs should be 13 ~ 16 g (0.46 ~ 0.56 oz.) when #60 polyester thread is being used.

## ADJUSTMENT

1. Set the dial to the automatic thread tension position, pass the #60 polyester thread between the two thread tension discs, and then lower the presser foot.
2. Loosen the thread tension screw.
3. Check to be sure that the #60 polyester thread is between the two thread tension discs, and then pull the thread gently using a tension gauge and turn the thread tension adjusting screw to adjust the thread tension to 13 ~ 16 g (0.46 ~ 0.56 oz.).
4. Tighten the thread tension screw.

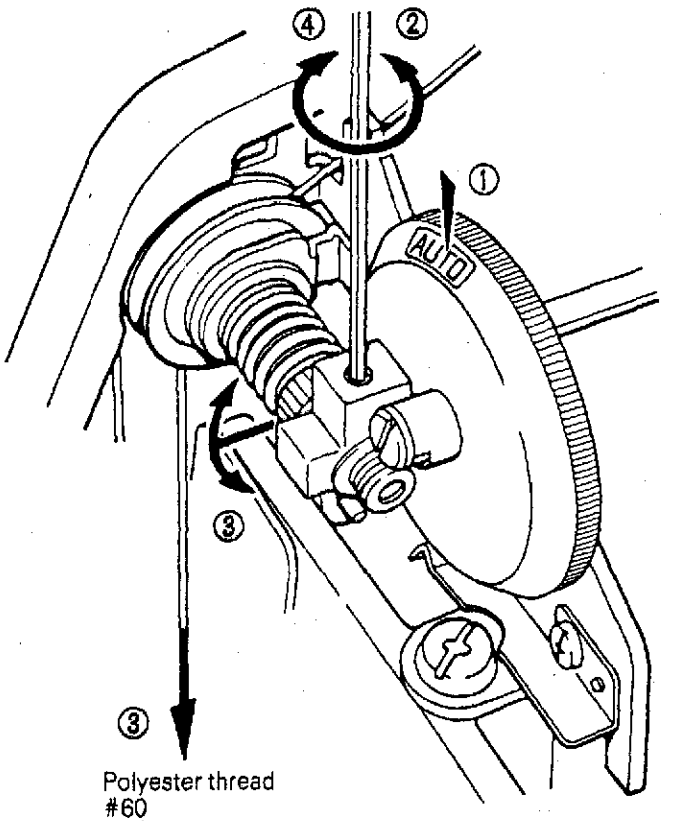


Polyester thread
#60
13 g ~ 16 g
(0.46 ~ 0.56 oz.)

# 17. ADJUSTMENT OF THREAD TENSION DIAL <825>

## STANDARD

When the presser foot is lowered and the thread tension dial is set to the "4" position on the scale, the tension between the thread tension discs should be 27 ~ 32 g (0.95 ~ 1.13 oz.) when #60 polyester thread is being used.

## ADJUSTMENT

1. Set the dial to the "4" position on the scale, pass the #60 polyester thread between the two thread tension discs, and then lower the presser foot.
2. Loosen the thread tension screw.
3. Check to be sure that the #60 polyester thread is between the two thread tension discs, and then pull the thread gently using a tension gauge and turn the thread tension adjusting screw to adjust the thread tension to 27 ~ 32 g (0.95 ~ 1.13 oz.).
4. Tighten the thread tension screw.

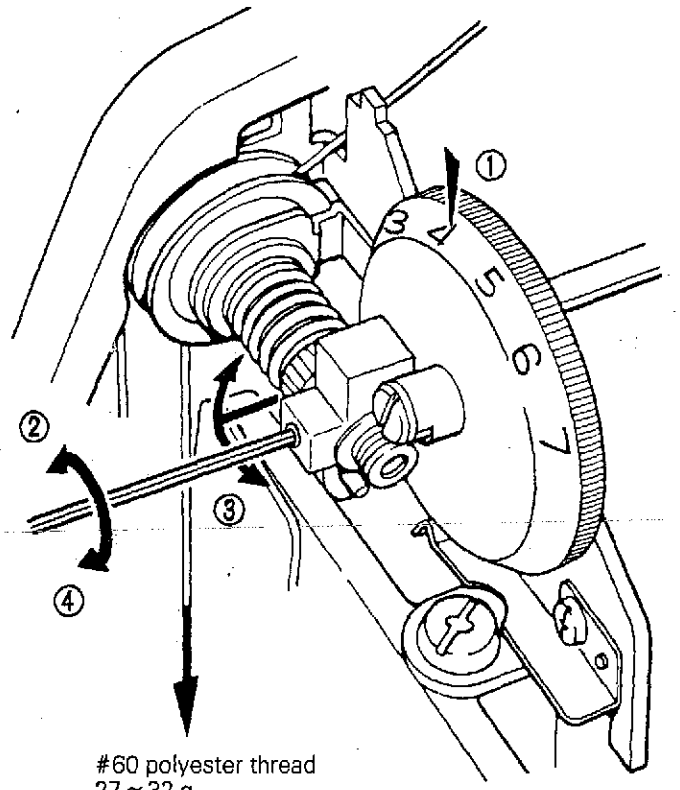

# 18. ADJUSTMENT OF ROLLER (AUTOMATIC THREAD TENSION) <835, 826>

## STANDARD

When the roller and tread guide are threaded with #60 polyester thread and the upper shaft pulley is turned in the forward direction by hand so that the top of the needle eye is lowered 0 ~ 1.5 mm (0 ~ 0.06 in.) from the top of the needle plate hole, the thread should be locked. (The presser foot should be removed and the presser bar should be lowered.)

## ADJUSTMENT

1. Turn on the power and set left straight-line sewing. Thread #60 polyester thread correctly, and lower the presser bar.
2. Turn the upper shaft pulley in the forward direction so that the top of the needle eye is lowered 0 ~ 1.5 mm (0 ~ 0.06 in.) from the top of the needle plate hole.
3. Loosen the set screw of the roller adjusting shaft.
4. Turn the roller adjusting shaft with a screwdriver while pulling the thread to adjust the thread tension to the border between the locked and released condition.
5. Tighten the set screw of the roller adjusting shaft. (The roller adjusting shaft should be adjusted within one revolution.)

NOTE: Check that the thread changes from being released to being locked when the upper shaft pulley is turned 2 ~ 3 times in the forward direction and the top of the needle eye is lowered 0 ~ 1.5 mm (0 ~ 0.06 in.) from the top of the needle plate hole. In addition, make sure that the thread tension is available for double broad stitching using a #11 needle and #60 polyester thread.

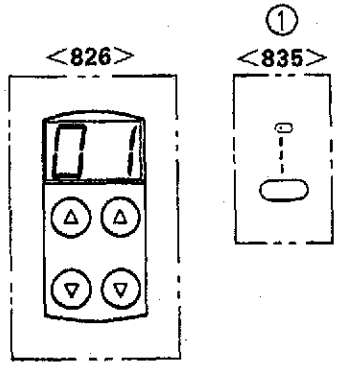


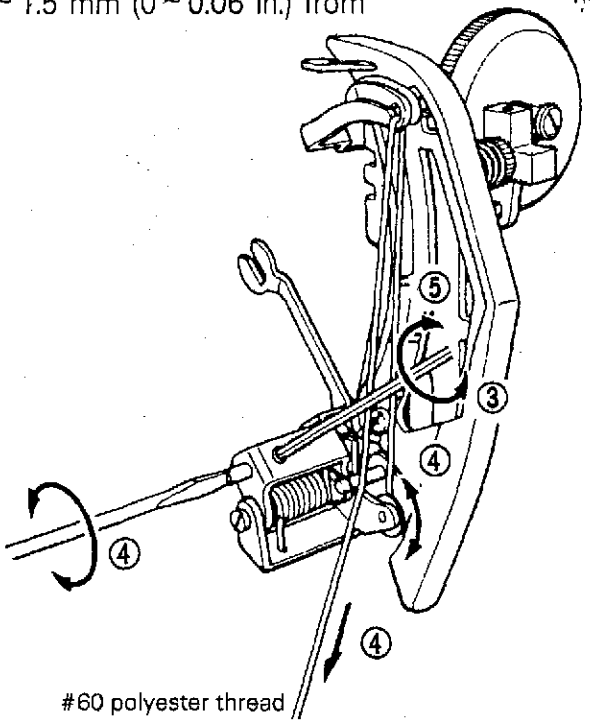


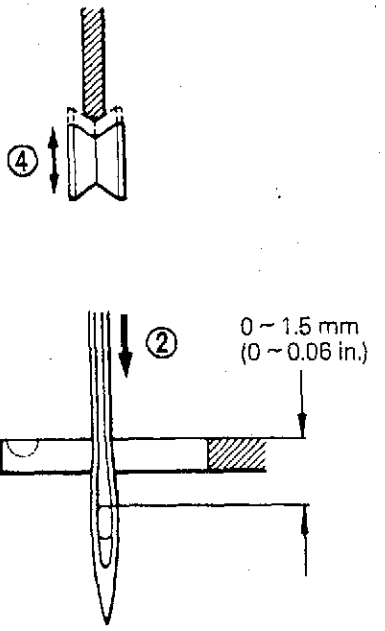

# 19. ADJUSTMENT OF INNER ROTARY HOOK TENSION

## STANDARD

The inner rotary hook tension should be 12 ~ 14 g (0.4 ~ 0.5 oz.) when #60 polyester thread is pulled gently using a tension gauge.

## ADJUSTMENT

1. Thread the inner rotary hook correctly with #60 polyester thread, and then pull the thread gently using a tension gauge.
2. Use a screwdriver to turn the adjusting screw to the left or right to adjust the thread tension.

   NOTE: After adjusting, paint over the screw to lock it.

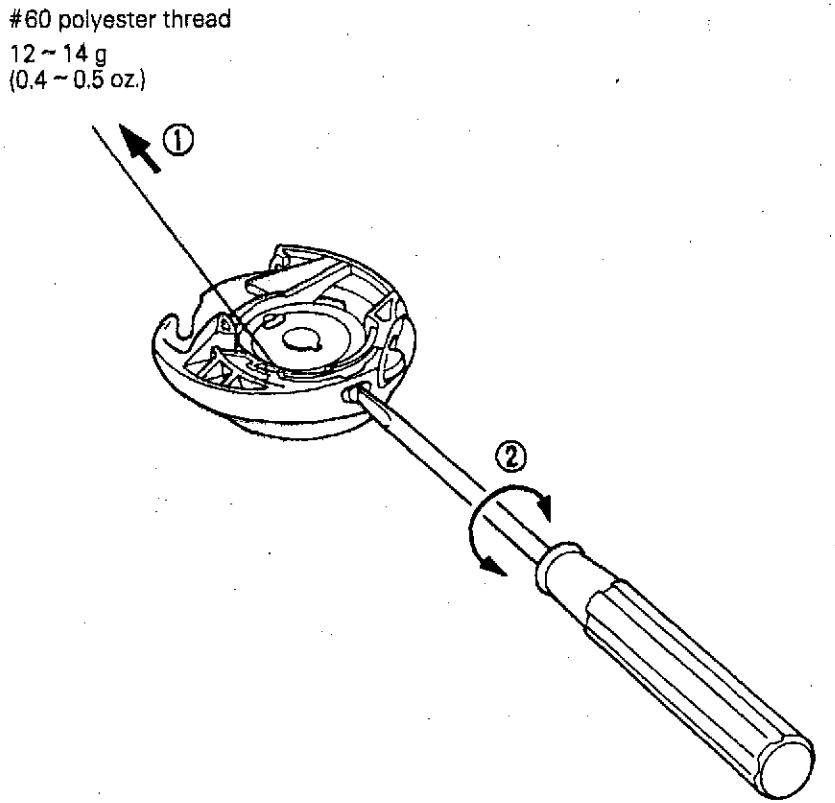

# 20. ADJUSTMENT OF PATTERN <835>

## STANDARD

When a single motif pattern such as the "Crocodile" pattern is selected and test sewing is carried out, the pattern should be sewn so that the width of the left and right back legs are equal.

## ADJUSTMENT

1. Turn on the power switch.
2. Press the "DECORA. STITCH" key.
3. Turn the pattern selection dial to "Utility" and then press the setting key.
4. Sew and check the crocodile pattern. If the pattern is incorrect, turn the pattern selection dial to select the pattern that has same type of incorrect shape, and then press the setting key.
5. Sew the pattern again, and confirm the pattern.
   (Repeat steps 4 and 5 until the widths of the crocodile's left and right back legs are equal.)
6. If the pattern shape is fine, set the pattern selection dial to "END", and press the setting key to complete the pattern adjustment.

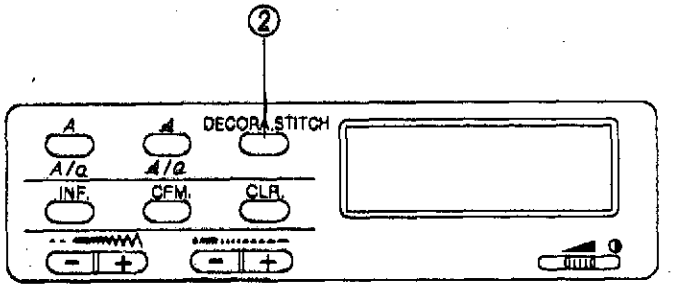


**Sample of shape for crocodile pattern**

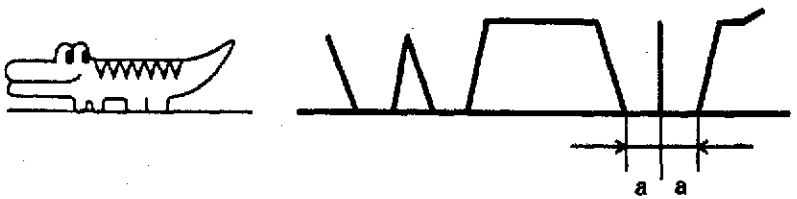


Normal shape

Width of left and right back legs are equal.

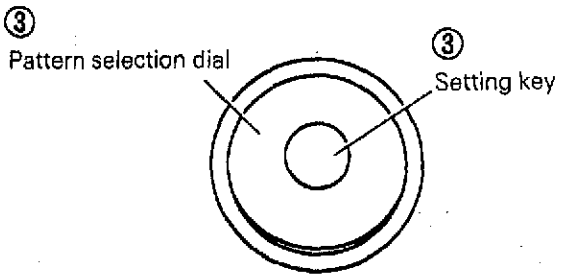

# 21. ADJUSTMENT OF PATTERN <826, 825>

## STANDARD

When a single motif pattern such as the "Crocodile" pattern is selected and test sewing is carried out, the pattern should be sewn so that the width of the left and right back legs are equal.

## ADJUSTMENT

1. Turn on the power switch.
2. Select "69" with the shift keys, and then press the memory key.
3. Sew and check the crocodile pattern. If the pattern is incorrect:
   - ○ If one of the back legs is normal but the other is too narrow.

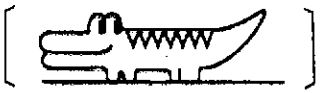

   - ● Press button ⓐ. (The numerical value will increment.)
   - ○ If one of the back legs is normal but the other is too wide.

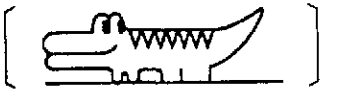

   - ● Press button ⓑ. (The numerical value will decrement.)

   ※ The adjustment range is -9・・・・・+9.
4. Sew the pattern again, and confirm the pattern. (Repeat steps 3 and 4 until the widths of the crocodile's left and right back legs are equal.)
5. If the pattern shape is fine, press the memory key again to complete the pattern adjustment.

**Sample of shape for crocodile pattern**

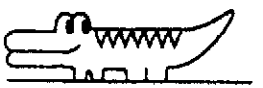

Normal shape

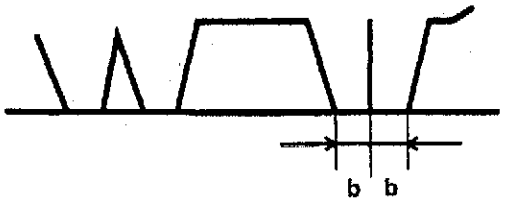


Width of left and right back legs are equal.

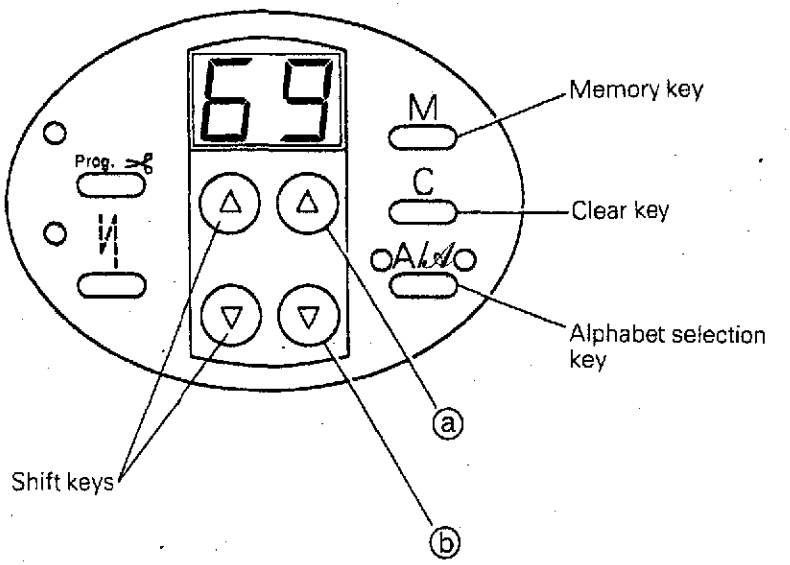

# 22. NEEDLE THREADER

## USING THE NEEDLE THREADER

There are a wide variety of different needles and sewing machine threads available. The right ones should be selected in accordance with the sewing conditions.

The needle threader is designed to make threading of needles easier, but it cannot handle every circumstance of use (combinations of needle and thread) that may occur. It can be used with some combinations but not with others, and if it can be used, the pattern may not be sewn correctly due to the particular sewing conditions. Do not use the needle threader without a thorough understanding of how to use it, otherwise the needle threader may be damaged or needle threading may not be possible.

Be sure to read and understand the following so that you can handle customer complaints.

## POINTS TO NOTE

1. The needle threader cannot be used with needles or threads which are not listed in the table at right, nor can it be used with combinations of needle and thread marked with an × in the table.
2. Use of combinations marked with ※ in the table is possible, but it is not recommended as it could damage the needle threader or result in poor performance.
3. Lower the presser foot when using the needle threader.
4. Use transparent nylon thread for needles #14 ~ 16, irrespective of the listing in the table.
5. Do not turn the upper shaft pulley when using the needle threader.
6. Do not lower the needle threader lever while the machine is running. The needle threader may be broken, rendering it unusable if lowered. In addition, it may cause the needle to break, which could result in injury.
7. If a #9 needle is used, the variation in needle precision may result in the needle being slightly difficult to thread.
8. If the needle is not more than 8 mm (0.31 in.) above the top of the needle plate, it may not be possible to use the needle threader for threading.
9. The needle threader cannot be used while the side cutter is being used. Thread the needle before attaching the side cutter.

| Needle size \ Thread count | #30 | #50 | #60 | #80 | #100 | #120 |
|---|---|---|---|---|---|---|
| #9 | × | × | × | ○ | ○ | ○ |
| #11 | × | ○ | ○ | ○ | ○ | ※ |
| #14 | × | ○ | ○ | ○ | ※ | ※ |
| #16 | ※ | ○ | ○ | ※ | ※ | ※ |
| #18 | ※ | ※ | ※ | ※ | ※ | ※ |

# 23. NEEDLE THREADER (SIMPLE CHECK OF HOOK OPERATION)

### HORIZONTAL POSITION OF NEEDLE WITH RESPECT TO NEEDLE HOLE

The distance from the inside of the hook guard (the side where the needletouches) to the center of the hook should be the standard distance of 0.42 mm (0.017 in.).

### SIMPLE METHOD OF CHECKING THE NEEDLE THREADER HOOK

As the standard needle is HA × 1 (#14), prepare 5 pcs. of new HA × 1 needles, and check using all of these needles.

1. If hook goes into eyes of all needles .....
   There is no problem.
2. If hook does not go into the eye of any needle .....
   Adjust by bending the hook.
3. If the hook goes into the eyes of only some needles .....
   Needles through which the hook does not go into are defective.

EXAMPLE: After 5 pcs. of new HA × 1 needles (#9) have been checked in the state of 1 above, it was found that "The hook did not go into the eyes of all needles". In this case, these #9 needles are judged as defective and the hook is not defective.

### HOOK ADJUSTMENT

If the checking method given above indicates that the hook is defective, adjust the hook by bending it with the type of pliers which are used for tuning electronic organs. When adjusting, be careful not to bend the hook guard.

# 24. NEEDLE THREADER (REPLACEMENT)

Replace the needle threader with the following procedure.

1. Remove the needle and lower the presser foot.
2. Depress the needle threader downward with the index fingers of both hands and remove it.
3. Install the new needle threader so that the guide groove and guide pin are as shown in Fig. A.
4. Push in the needle threader all the way until it is stopped by the guide pin.

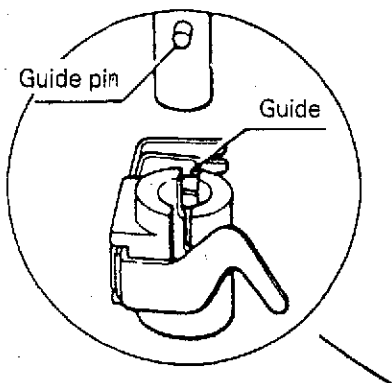


Fig. A

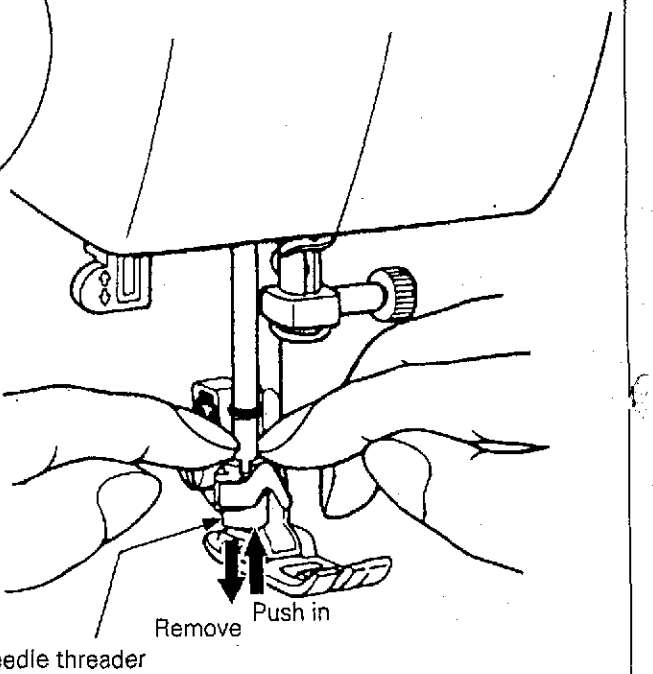

# 25. NEEDLE THREADER (STANDARD POSITION OF HOOK)

## VERTICAL POSITION OF NEEDLE WITH RESPECT TO NEEDLE HOLE

The clearance between the top of the hook and the top of the needle eye should be 0 mm (0 in.). Furthermore, needle threading should be possible when the end of the needle is 8 mm (0.31 in.) above the top of the needle plate.

## SYMPTOMS OF INCORRECT VERTICAL POSITIONING OF HOOK (Refer to the illustration)

(a) Hook hits the upper end of needle eye and cannot get through the needle eye. .....
Hook position is too high.

(b) Hook gets through the needle eye but the hook catches the bottom part of the needle eye. .....
Hook position is too low.

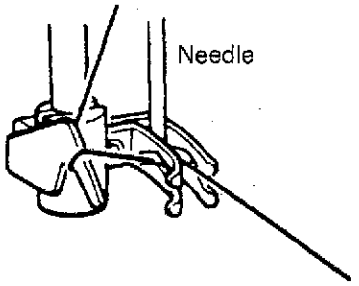


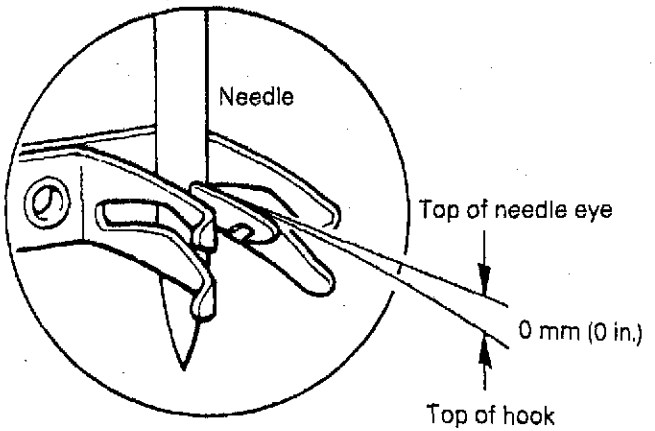


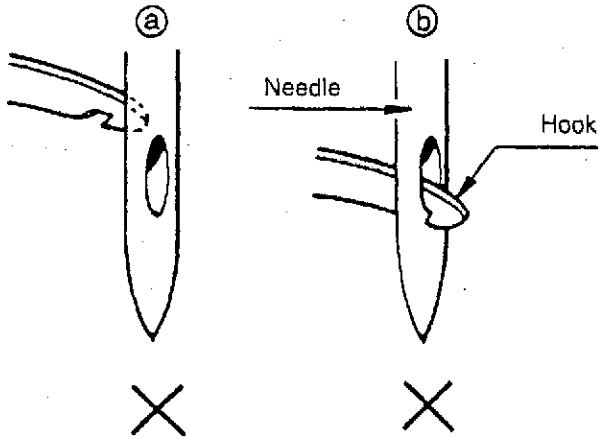

# 26. NEEDLE THREADER (VERTICAL POSITION OF HOOK)

(a) Hook position is too high
Move the needle to the right down position, loosen the screw of the needle threader position setter, lower the needle threader position setter slightly and adjust the clearance between the top of the hook and the top of the needle eye to 0 mm (0 in.). After adjusting check that section (A) of the needle threader position setter and section (B) of the needle bar clamp are parallel. If they are not parallel, adjust them so that they are parallel.

(b) Hook position is too low
Move the needle to the right down position, loosen the screw of the needle threader position setter, raise the needle threader position setter slightly and adjust the clearance between the top of the hook and the top of the needle eye to 0 mm (0 in.). After adjusting check that section (A) of the needle threader position setter and section (B) of the needle bar clamp are parallel. If they are not parallel, adjust them so that they are parallel.

If the needle threader position setter (A) and the needle bar clamp (B) are not parallel, the needle threader will not be held by the needle threader position setter (refer to Fig. 1), and the hook will not enter the eyelet of the needle (hook will not move). Thus, the needle will not be threaded when the needle threader lever is lowered.
In this case, loosen the screw securing the needle threader position setter and turn the needle threader position setter lightly to the left or right to make it parallel.
In addition, if the needle threader position setter is turned too far so that it is still not parallel, it may hit other parts, causing damage (refer to Fig. 2). If a part is damaged, it must be replaced. If no part is damaged, loosen the screw securing the needle threader position setter and turn the needlethreader position setter slightly to the right to make it parallel.

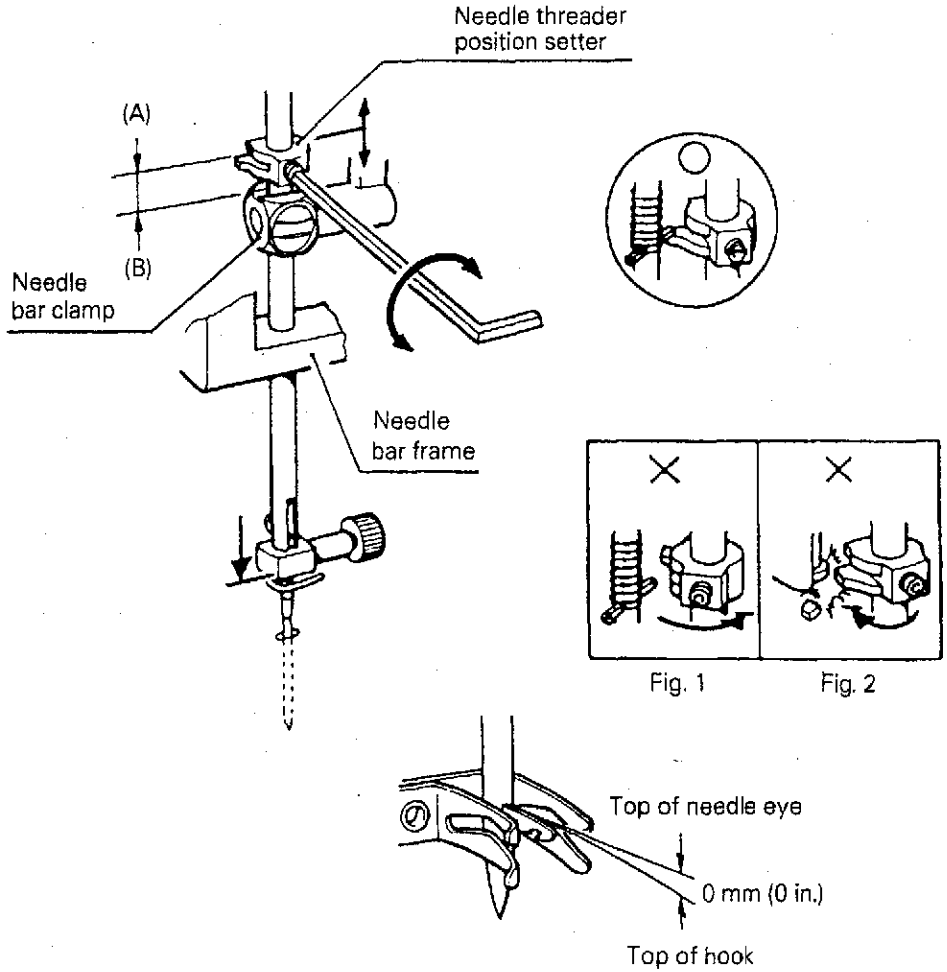

# 27. SIDE-CUTTER ADJUSTMENT (MEETING OF UPPER KNIFE AND LOWER KNIFE)

## STANDARD

1. When the side-cutter is set on the machine and the needle bar is at lowest position, both knives meet each other by 0.2 ~ 0.7 mm (0.008 ~ 0.28 in.).
2. Set the needle bar to its highest position and after adjusting the clearance between the adjusting screw of side-cutter arm and the side-cutter arm to be 0.2 ~ 0.3 mm (0.008 ~ 0.012 in.), both knives meet each other more than by 0.4 mm (0.016 in.), with the side-cutter removing from the machine and the side-cutter arm raising at highest position.

## ADJUSTMENT

1. Remove the bracket case and attach the side-cutter to the machine.
2. Set the needle bar at lowest position and adjust both knives to meet each other by 0.2 ~ 0.7 mm (0.008 ~ 0.028 in.). Then tighten the upper knife set screw securely.
3. Set the needle bar at highest position and adjust the clearance between the adjusting screw of side-cutter arm and the side-cutter arm is 0.2 ~ 0.3 mm (0.008 ~ 0.012 in.).
4. Remove the side-cutter from machine, raise the side-cutter arm at highest position, and adjust the upper knife to meet with knife by more than 0.4 mm (0.016 in.).

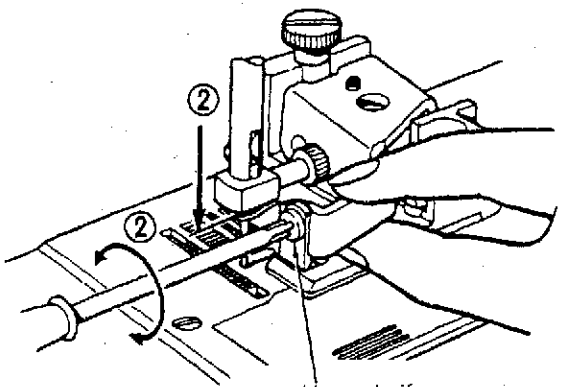


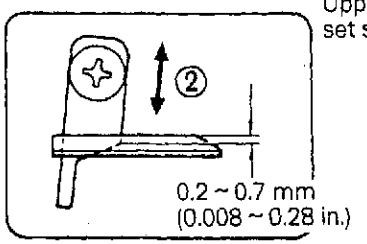


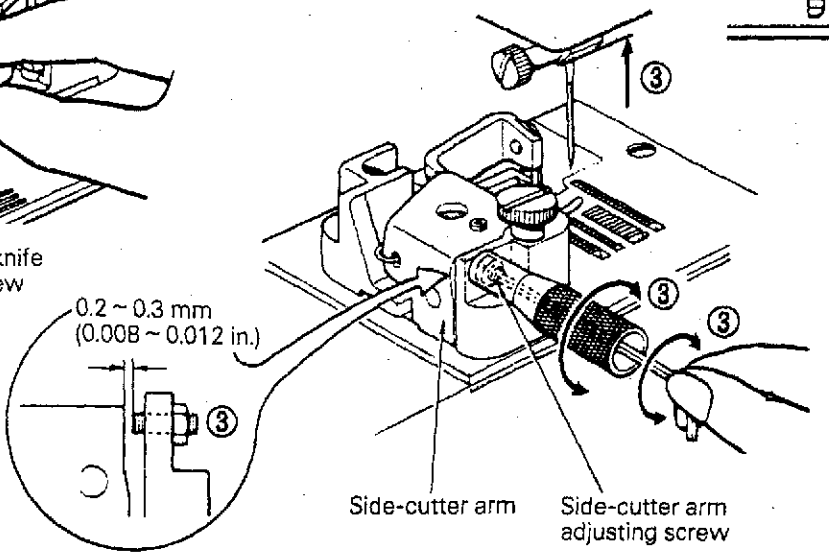


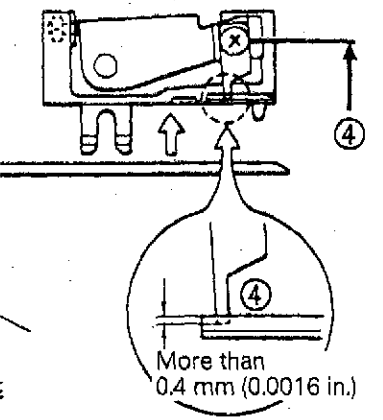


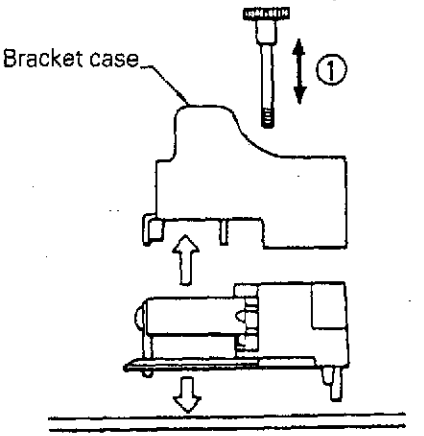

# 28. SIDE-CUTTER ADJUSTMENT (CLEARANCE BETWEEN UPPER KNIFE AND LOWER KNIFE)

### STANDARD

The clearance between the upper knife and the lower knife is 0.02 ~ 0.05 mm (0.0008 ~ 0.002 in.) at back side.

### ADJUSTMENT

1. Remove the side-cutter from the machine, and meet the upper knife with lower knife by moving the side-cutter arm.
2. Loosen the screw of lower knife and the lock nut of eccentric stud slightly.
3. Adjust the eccentric stud of lower knife to obtain the clearance between the upper knife and the lower knife by 0.02 ~ 0.05 mm (0.0008 ~ 0.002 in.) at back side.
   (At this time, adjust the eccentric stud of the lower knife at left position as illustrated)
4. Tighten the lock nut of eccentric stud moderately so as not to be loosened.
5. Tighten the set screw of lower knife securely.

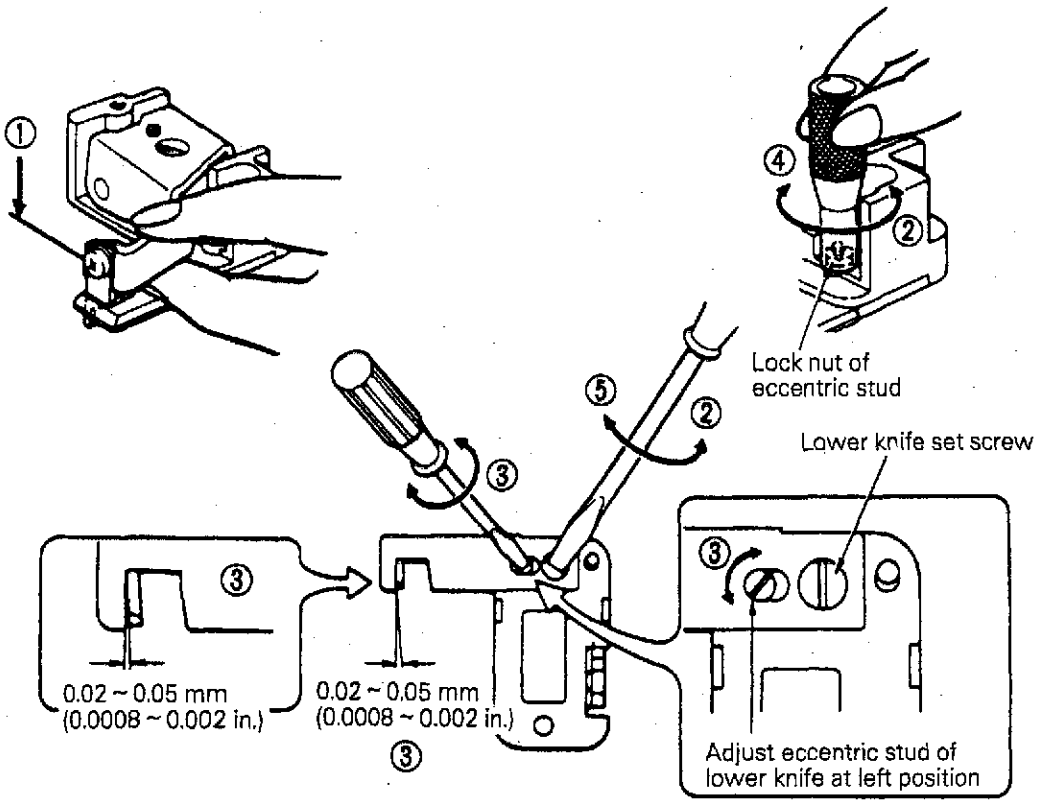

# IV. ADJUSTMENT STANDARDS AND ADJUSTMENT PROCEDURES FOR MECHANICAL PARTS

## CONTENTS


**Model 836**

1. When the power is turned on, the buzzer does not sound, and nothing appears on the display. ..... 56
2. After the power is turned on, feed and zigzag pulse motors do not return to their regulated positions with respect to the needle position. ..... 56
3. When power is turned on, "..... SW" appears on the display. ... 56
4. The pattern cannot be selected. ..... 57
5. The main motor does not run. ..... 57
6. Operation of the main motor is not stable, maximum speed operation is not achieved or the speed cannot be adjusted. .... 57
7. The patterns are not created correctly. ..... 58
8. Button holes are not stitched correctly. ..... 58
9. Manual feed or manual zigzag operation is not possible. ..... 58
10. Vertical movement of needle bar and backstitch operation are abnormal. ..... 59
11. Normal operation is not possible even when foot controller is pressed. ..... 59
12. The needle bar release mechanism does not operate correctly. ..... 59
13. The thread cutter does not operate correctly. ..... 60
14. The display does not appear clearly. ..... 60
15. The thread cannot be wound on the bobbin. ..... 60
16. The side cutter pattern cannot be stitched properly. ..... 60

**Model 826, 825**

1. When the power is turned on, the buzzer does not sound, and the 7-segment LED does not light. ..... 61
2. After the power is turned on, feed and zigzag pulse motors do not return to their regulated positions with respect to the needle position. ..... 61
3. The pattern cannot be selected. ..... 62
4. The main motor does not run. ..... 62
5. Operation of the main motor is not stable, maximum speed operation is not achieved or the speed cannot be adjusted. .... 62
6. The patterns are not created correctly. ..... 63
7. Button holes are not stitched correctly. ..... 63
8. Manual feed or manual zigzag operation is not possible. ....., 64
9. Vertical movement of needle bar and backstitch operation are abnormal. ..... 64
10. Normal operation is not possible even when foot controller is pressed. ..... 64
11. The needle bar release mechanism does not operate correctly. <826> ..... 65
12. The thread cutter does not operate correctly. <826> ..... 65
13. The thread cannot be wound on the bobbin. ..... 65
14. The LED or 7-segment LED does not illuminate. ..... 65
15. The side cutter pattern cannot be stitched properly. <826> ..... 65

## PROBLEM DIAGNOSIS PROCEDURES FOR THE ELECTRONIC PARTS

### For model 835

※ The power must be turned off and the connectors disconnected from printed circuit boards before measuring resistance.
※ Refer to the respective drawings for the check positions.

| CONDITION | PROBLEM SYMPTOMS | COUNTERMEASURES |
|---|---|---|
| 1. When the power is turned on, the buzzer does not sound, and nothing appears on the LCD. | 1) When the main power switch is turned on, are both resistances 1 Ω or less? | 1) Replace the power supply unit assembly. |
| | 2) Disconnect the output connector (CN12) from the power supply PC board, and measure the voltage between pins 4-5 and 6-7.<br>(CN12) ..... Between 4-5 → DC 8 ~ 12 V<br>(CN12) ..... Between 6-7 → DC 22 ~ 30 V | 2) Replace the power supply unit assembly. |
| | 3) Is there a blown fuse? | 3) Replace the fuse (Remove the cause of the blown fuse, and then replacethe fuse.) |
| | 4) Others | 4) Replace the main PC board assembly or replace the operation PC board assembly. |
| 2. After the power is turned on, feed and zigzag pulse motors do not return to their regulated positions with respect to the needle position.<br>( When needle bar is raised<br>..... Zigzag pulse motor<br>When needle bar is lowered<br>..... Feed pulse motor ) | 1) Are the resistance between the connector pins given below normal for the pulse motors which do not return to the home position?<br>Zigzag (CN8) ..... Between 1-3, 2-3, 4-5, 4-6 → 10 ~ 12 Ω<br>Feed (CN14) ..... Between 1-3, 2-3, 4-5, 4-6 → 7 ~ 8 Ω | 1) Replace the defective pulse motor unit. |
| | 2) Return to the regulated position for the same pulse motor irrespective of needle position. | 2) Replace the NP board assembly or main PC board assembly. |
| | 3) Is there a blown fuse? | 3) Replace the fuse (Remove the cause of the blown fuse, and then replace the fuse.) |
| | 4) Disconnect the output connector (CN12) from the power supply PC board, and measure the voltage between pins 6-7.<br>(CN12) ..... Between 6-7 → DC 22 ~ 30 V | 4) Replace the power supply unit assembly. |
| | 5) Others | 5) Replace the main PC board assembly. |
| 3. When power is turned on, "..... SW" appears on the display. | 1) Is the switch displayed as "..... SW" turned on? | 1) Check the assembly state of the displayed switch or replace the main PC board assembly. |

| CONDITION | PROBLEM SYMPTOMS | COUNTERMEASURES |
|---|---|---|
| 4. The pattern cannot be selected. | 1) Is some switch on the SS PC board, operation PC board or dial PC board pressed down?<br>2) Is the foot controller connected and pressed down?<br>3) Others | 1) Adjust or replace the PC board assembly.<br>2) Check<br>3) Replace the main PC board assembly. |
| 5. The main motor does not run. | 1) Does the upper shaft pulley rotate easily?<br>2) Is the main motor's connector (CN3 on the power supply unit) correctly connected?<br>3) Is the resistance of both ends on the main motor connector (CN3 on power supply unit) 24 ~ 34 Ω?<br>4) Do the START/STOP-, backstitch-, needle position-, and automatic thread cutter switches operate correctly?<br>Operation of both terminals on each switch:<br>When switch is pressed ... Between terminals → 1 Ω or less<br>When switch is released ... Between terminals → ∞ (Infinite)<br>5) Is the presser foot lifter lowered?<br>Does the presser foot switch operate correctly?<br>Operation of presser foot switch connector (CN3):<br>When lever is lifted ..... Between terminals → 1 Ω or less<br>When lever is lowered ..... Between terminals → ∞ (Infinite)<br>6) Others | 1) Adjust so that the pulley rotates easily.<br>2) Check<br>3) Replace the main motor.<br>4) Replace the SS PC board assembly.<br>5) Check or replace the presser foot switch assembly.<br>6) Replace the main PC board assembly or power supply unit assembly. |
| 6. Operation of the main motor is not stable, maximum speed operation is not achieved or the speed cannot be adjusted. | 1) Does the voltage between connector pins 6-7 (CN11) on the speed VR change from 0 to 5 V DC when the power is turned "ON" and the speed volume is slid?<br>2) Does the voltage between connector pins 2-1 (CN9) for the speed sensor fluctuate between 0 ~ 5 V DC when the upper shaft pulley is turned slowly in reverse direction?<br>3) Does the voltage between connector pins 3-2, 4-2 and 5-2 (CN2) on the NP P.C. board assembly fluctuate between 0 ~ 5 V DC when the upper shaft pulley is turned slowly in reverse direction?<br>4) Others | 1) Replace the dial PC board assembly or main PC board assembly.<br>2) Replace the main motor or main PC board assembly.<br>3) Replace the NP board assembly or main PC board assembly.<br>4) Replace the main PC board assembly. |

| CONDITION | PROBLEM SYMPTOMS | COUNTERMEASURES |
|---|---|---|
| 7. The patterns are not created correctly. | 1) Does the needle bar move horizontally easily by hand when the power is turned off?<br>2) Is the NP shutter position correct?<br>3) Are the resistances between the connector pins on the pulse motors given below normal?<br>Zigzag (CN8) ..... Between 1-3, 2-3, 4-5, 4-6 → 10 ~ 12 Ω<br>Feed (CN14) ..... Between 1-3, 2-3, 4-5, 4-6 → 7 ~ 8 Ω<br>4) Does the voltage between connector pins 3-2, 4-2 and 5-2 (CN2) on the NP P.C. board assembly fluctuate between 0 ~ 5 V DC when the upper shaft pulley is turned slowly in reverse direction?<br>5) Is the pulse motor home position correctly set?<br>6) Others | 1) Adjust so that the needle bar moves easily.<br>2) Adjust. (Refer to page 33.)<br>3) Replace the defective pulse motor unit.<br>4) Replace the NP board assembly or main PC board assembly.<br>5) Confirm. (Refer to page 28.)<br>6) Replace the main PC board assembly. |
| 8. Button holes are not stitched correctly. | 1) Is the BH presser foot set correctly?<br>2) Is the resistance between pins 4-5 of the BH switch connector (CN4) normal?<br>BH lever is lowered ..... Between 4-5 → 1 Ω or less<br>BH lever is raised ..... Between 4-5 → ∞ (Infinite)<br>3) Is the resistance between pins 1-2 and 2-3 of the BH switch connector (CN4) normal when the BH lever is lowered, and the following conditions are applied?<br>Between 1-2 Between 2-3<br>BH lever is pulled forward ..... 1 Ω or less ∞ (Infinite)<br>BH lever is pulled back ..... ∞ (Infinite) 1 Ω or less<br>4) Others | 1) Confirm<br>2) Adjust or replace the BH change switch assembly.<br>3) Adjust or replace the BH switch assembly. (Refer to page 40.)<br>4) Replace the main PC board assembly. |
| 9. Manual feed or manual zigzag operation is not possible. | 1) Does the manual feed and manual zigzag keys turn ON/OFF normally, and does the LCD display change?<br>2) Are the resistances between the connector pins given below normal for the feed and zigzag pulse motor connectors?<br>Feed (CN14) ..... Between 1-3, 2-3, 4-5, 4-6 → 7 ~ 8 Ω<br>Zigzag (CN8) ..... Between 1-3, 2-3, 4-5, 4-6 → 10 ~ 12 Ω<br>3) Others | 1) Replace the operation PC board assembly or main PC board assembly.<br>2) Replace the feed or zigzag pulse motor unit.<br>3) Replace the main PC board assembly. |

| CONDITION | PROBLEM SYMPTOMS | COUNTERMEASURES |
|---|---|---|
| 10. Vertical movement of needle bar and backstitch operation are abnormal. | 1) Are the resistances between both ends of the SS PC board assembly switches 1 Ω or less or ∞ (infinite) when the switches are turned off and on? | 1) Replace the SS PC board assembly. |
| | 2) Is the position of the NP shutter normal? | 2) Adjust. (Refer to page 33.) |
| | 3) Does the voltage between connector pins 3-2, 4-2 and 5-2 (CN2) on the NP board assembly fluctuate between 0 ~ 5 V DC when the upper shaft pulley is turned slowly in reverse direction? | 3) Replace the NP board assembly or main PC board assembly. |
| | 4) Does the voltage between connector pins 2-1 (CN9) for the speed sensor fluctuate between 0 ~ 5 V DC when the upper shaft pulley is turned slowly in reverse direction? | 4) Replace the main motor or main PC board assembly. |
| | 5) Is the bobbin winder switch turned off? | 5) Adjust the bobbin winder mechanism. (Refer to page 41.) |
| | 6) Others | 6) Replace the main PC board assembly. |
| 11. Normal operation is not possible even when foot controller is pressed. | 1) Is the resistance between pins 2-3 of the foot controller jack connector (CN15) 1 Ω or less when the foot controller is not connected and ∞ (infinite) when the foot controller connected? | 1) Replace the foot controller jack assembly. |
| | 2) Does the resistance between pins 1-3 of the foot controller jack connector (CN15) change from several Ω to 10 k Ω when the foot controller is connected and the controller is pressed slowly? | 2) Replace foot controller or main PC board assembly. |
| | 3) Others | 3) Replace the main PC board assembly. |
| 12. The needle bar release mechanism does not operate correctly. | 1) Does the needle bar release solenoid lever operate smoothly? | 1) Adjust the needle bar release mechanism. |
| | 2) Is the resistance between pins 1-2 of the needle bar release solenoid connector (CN6) 15 ~ 19 Ω | 2) Replace the NR solenoid holder assembly. |
| | 3) Others | 3) Replace the main PC board assembly. |

| CONDITION | PROBLEM SYMPTOMS | COUNTERMEASURES |
|---|---|---|
| 13. The thread cutter does not operate correctly. | 1) Does the thread cutting solenoid lever operate smoothly?<br>2) Is the resistance between pins 1-2 of the thread cutting solenoid connector (CN13) 15 ~ 19 Ω<br>3) Does the V roller opening solenoid lever operate smoothly?<br>4) Is the resistance between pins 1-2 of the V roller opening solenoid connector (CN7) 15 ~ 19 Ω?<br>5) Others | 1) Adjust the thread cutting mechanism.<br>2) Replace the thread cutting solenoid assembly.<br>3) Adjust the V roller opening mechanism.<br>4) Replace the VK solenoid assembly.<br>5) Replace the main PC board assembly. |
| 14. The display does not appear clearly. | 1) Is the contrast adjustment key correctly adjusted?<br>2) Is the resistance between pins 1-2 of the operation PC board connector(CN5) -3 ~ -5 V DC?<br>3) Others | 1) Adjust the contrast adjustment key.<br>2) Replace the main PC board assembly.<br>3) Replace the operation PC board assembly or main PC board assembly. |
| 15. The thread cannot be wound on the bobbin. | 1) Is the resistance between both ends of the bobbin winder switch connector (CN1) 1 Ω or less when thread is wound and ∞ (infinite) in other cases?<br>2) Is bobbin winder mounted correctly?<br>3) Others | 1) Replace the bobbin winder switch assembly.<br>2) Adjust. (Refer to page 41.)<br>3) Replace the main PC board assembly. |
| 16. The side cutter pattern cannot be stitched properly. | 1) Is the resistance between both ends of the side cutter switch connector (CN10) 1 Ω or less when operating and ∞ (infinite) when stopped?<br>2) Is side cutter mounted correctly?<br>3) Others | 1) Replace the side cutter switch holder assembly.<br>2) Adjust. (Refer to pages 53, 54.)<br>3) Replace the main PC board assembly. |

## PROBLEM DIAGNOSIS PROCEDURES FOR THE ELECTRONIC PARTS

### For models 826 and 825

1. The power must be turned off and the connectors disconnected from printed circuit boards before measuring resistance.
2. Refer to the respective drawings for the check positions.
3. The indication <826> in the explanations are items that apply only to model 826.

| CONDITION | PROBLEM SYMPTOMS | COUNTERMEASURES |
|---|---|---|
| 1. When the power is turned on, the buzzer does not sound, and the 7-segment LED does not light. | 1) When the main power switch is turned on, are both resistances 1 Ω or less? | 1) Replace the power supply unit assembly. |
| | 2) Disconnect the output connector (CN12) from the power supply PC board, and measure the voltage between pins 4-5 and 6-7.<br>(CN12) ..... Between 4-5 → DC 8 ~ 12 V<br>(CN12) ..... Between 6-7 → DC 22 ~ 30 V | 2) Replace the power supply unit assembly. |
| | 3) Is there a blown fuse? | 3) Replace the fuse. (Remove the cause of the blown fuse, and then replace the fuse.) |
| | 4) Others | 4) Replace the main PC board assembly or replace the operation PC board assembly. |
| 2. After the power is turned on, feed and zigzag pulse motors do not return to their regulated positions with respect to the needle position.<br>(When needle bar is raised ..... Zigzag pulse motor<br>When needle bar is lowered ..... Feed pulse motor) | 1) Are the resistances between the connector pins on the pulse motors that do not return to their home positions given below normal?<br>Zigzag (CN8) ..... Between 1-3, 2-3, 4-5, 4-6 → 10 ~ 12 Ω<br>Feed (CN14) ..... Between 1-3, 2-3, 4-5, 4-6 → 7 ~ 8 Ω | 1) Replace the defective pulse motor unit. |
| | 2) Return to the regulated position for the same pulse motor irrespective of needle position. | 2) Replace the NP board assembly or main PC board assembly. |
| | 3) Is there a blown fuse? | 3) Replace the fuse (Remove the cause of the blown fuse, and then replace the fuse.) |
| | 4) Disconnect the output connector (CN12) from the power supply PC board, and measure the voltage between pins 6-7.<br>(CN12) ..... Between 6-7 → DC 22 ~ 30V | 4) Replace the power supply unit assembly. |
| | 5) Others | 5) Replace the main PC board assembly. |

| CONDITION | PROBLEM SYMPTOMS | COUNTERMEASURES |
|---|---|---|
| 3. The pattern cannot be selected. | 1) Is some switch on the SS PC board or operation PC board pressed down?<br>2) Is the foot controller connected and pressed down?<br>3) Others | 1) Adjust or replace the PC board assembly.<br>2) Check<br>3) Replace the main PC board assembly. |
| 4. The main motor does not run. | 1) Does the upper shaft pulley rotate easily?<br>2) Is the main motor's connector (CN3 on the power supply unit) correctly connected?<br>3) Is the resistance of both ends on the main motor connector (CN3 on power supply unit) 24 ~ 34 Ω?<br>4) Do the START/STOP-, backstitch-, needle position- switches and automatic thread cutter switch <826> operate correctly?<br>Operation of both terminals on each switch:<br>When switch is pressed .... Between terminal → 1 Ω or less<br>When switch is released ... Between terminals → ∞ (Infinite)<br>5) Is the presser foot lifter lowered?<br>Does the presser foot switch operate correctly?<br>Operation of presser foot switch connector (CN3):<br>When lever is lifted ..... Between terminals → 1 Ω or less<br>When lever is lowered ..... Between terminals → ∞ (Infinite)<br>6) Others | 1) Adjust so that the wheel rotates easily.<br>2) Check<br>3) Replace the main motor.<br>4) Replace the SS PC board assembly.<br>5) Check or replace the presser foot switch assembly.<br>6) Replace the main PC board assembly or power supply unit assembly. |
| 5. Operation of the main motor is not stable, maximum speed operation is not achieved or the speed cannot be adjusted. | 1) Does the voltage on both ends of the main PC board capacitor C1 change from 0 to 5 V DC when the power is turned "ON" and the speedvolume is slid?<br>2) Does the voltage of connector pins 2-1 on the speed sensor connector (CN9) fluctuate between 0 ~ 5 V DC when the upper shaft pulley is turned slowly in reverse direction?<br>3) Does the voltage between connector pins 3-2, 4-2 and 5-2 (CN2) on the NP P.C. board assembly fluctuate between 0 ~ 5 V DC when the upper shaft pulley is turned slowly in reverse direction?<br>4) Others | 1) Replace the operation PC board assembly or main PC board assembly.<br>2) Replace the main motor or main PC board assembly.<br>3) Replace the NP board assembly or main PC board assembly.<br>4) Replace the main PC board assembly. |

| CONDITION | PROBLEM SYMPTOMS | COUNTERMEASURES |
|---|---|---|
| 6. The patterns are not created correctly. | 1) Does the needle bar move horizontally easily by hand when the power is turned off?<br>2) Is the NP shutter position correct?<br>3) Are the resistances between the connector pins on the pulse motors given below normal?<br>Zigzag (CN8) ..... Between 1-3, 2-3, 4-5, 4-6 → 10 ~ 12 Ω<br>Feed (CN14) ..... Between 1-3, 2-3, 4-5, 4-6 → 7 ~ 8 Ω<br>4) Does the voltage between connector pins 3-2, 4-2 and 5-2 (CN2) on the NP P.C. board assembly fluctuate between 0 ~ 5 V DC when the upper shaft pulley is turned slowly in reverse direction?<br>5) Is the pulse motor home position correctly set?<br>6) Others | 1) Adjust so that the needle bar moves easily.<br>2) Adjust. (Refer to page 32.)<br>3) Replace the defective pulse motor unit.<br>4) Replace the NP board assembly or main PC board assembly.<br>5) Confirm. (Refer to page 29.)<br>6) Replace the main PC board assembly. |
| 7. Button holes are not stitched correctly. | 1) Is the BH presser foot set correctly?<br>2) Is the resistance between pins 4-5 of the BH switch connector (CN4) normal?<br>BH lever is lowered ..... Between 4-5 → 1 Ω or less<br>BH lever is raised ..... Between 4-5 → ∞ (Infinite)<br>3) Is the resistance between pins 1-2 and 2-3 of the BH switch connector (CN4) normal when the BH lever is lowered, and the following conditions are applied?<br>Between 1-2 / Between 2-3<br>BH lever is pulled forward ..... 1 Ω or less / ∞ (Infinite)<br>BH lever is pulled back ..... ∞ (Infinite) / 1 Ω or less<br>4) Others | 1) Confirm<br>2) Adjust or replace the BH change switch assembly.<br>3) Adjust or replace the BH switch assembly. (Refer to page 39.)<br>4) Replace the main PC board assembly. |

| CONDITION | PROBLEM SYMPTOMS | COUNTERMEASURES |
|---|---|---|
| 8. Manual feed or manual zigzag operation is not possible. | 1) Does the voltage on both ends of the main PC board capacitor C11 and C14 change from 0 to 5 V DC when the power is turned "ON" and the manual feed volume or manual zigzag volume is slid? | 1) Replace the operation PC board assembly or main PC board assembly. |
| | 2) Are the manual feed and manual zigzag keys normal?<br>Operation of both terminals on each switch:<br>When switch is pressed ... Between terminals → 1 Ω or less<br>When switch is released ... Between terminals → ∞ (Infinite) | 2) Replace the operation PC board assembly. |
| | 3) Are the resistances between the connector pins given below normal for the feed and zigzag pulse motor connectors?<br>Feed (CN14) ..... Between 1-3, 2-3, 4-5, 4-6 → 7 ~ 8 Ω<br>Zigzag (CN8) ..... Between 1-3, 2-3, 4-5, 4-6 → 10 ~ 12 Ω | 3) Replace the feed or zigzag pulse motor unit. |
| | 4) Others | 4) Replace the main PC board assembly. |
| 9. Vertical movement of needle bar and backstitch operation are abnormal. | 1) Are the resistances between both ends of the SS PC board assembly switches 1 Ω or less or ∞ (infinite) when the switches are turned off and on? | 1) Replace the SS PC board assembly. |
| | 2) Is the position of the NP shutter normal? | 2) Adjust. (Refer to page 33.) |
| | 3) Does the voltage between connector pins 3-2, 4-2 and 5-2 (CN2) on the NP board assembly fluctuate between 0 ~ 5 V DC when the upper shaft pulley is turned slowly in reverse direction? | 3) Replace the NP board assembly or main PC board assembly. |
| | 4) Does the voltage between connector pins 2-1 (CN9) for the speed sensorfluctuate between 0 ~ 5 V DC when the upper shaft pulley is turned slowly in reverse direction? | 4) Replace the main motor or main PC board assembly. |
| | 5) Is the bobbin winder switch turned off? | 5) Adjust the bobbin winder mechanism. (Refer to page 41.) |
| | 6) Others | 6) Replace the main PC board assembly. |
| 10. Normal operation is not possible even when foot controller is pressed. | 1) Is the resistance between pins 2-3 of the foot controller jack connector (CN15) 1 Ω or less when the foot controller is not connected and ∞ (infinite) when the foot controller is connected? | 1) Replace the foot controller jack assembly. |
| | 2) Does the resistance between pins 1-3 of the foot controller jack connector (CN15) change from several Ω to 10 k Ω when the foot controller is connected and the controller is pressed slowly? | 2) Replace foot controller or main PC board assembly. |
| | 3) Others | 3) Replace the main PC board assembly. |

| CONDITION | PROBLEM SYMPTOMS | COUNTERMEASURES |
|---|---|---|
| 11. The needle bar release mechanism does not operate correctly. <826> | 1) Does the needle bar release solenoid lever operate smoothly?<br>2) Is the resistance between pins 1-2 of the needle bar release solenoid connector (CN6) 15 ~ 19 Ω?<br>3) Others | 1) Adjust the needle bar release mechanism.<br>2) Replace the NR solenoid holder assembly.<br>3) Replace the main PC board assembly. |
| 12. The thread cutter does not operate correctly. <826> | 1) Does the thread cutting solenoid lever operate smoothly?<br>2) Is the resistance between pins 1-2 of the thread cutting solenoid connector (CN13) 15 ~ 19 Ω?<br>3) Does the V roller opening solenoid lever operate smoothly?<br>4) Is the resistance between pins 1-2 of the V roller opening solenoid connector (CN7) 15 ~ 19 Ω?<br>5) Others | 1) Adjust the thread cutting mechanism.<br>2) Replace the thread cutting solenoid.<br>3) Adjust the V roller opening mechanism.<br>4) Replace the VK solenoid assembly.<br>5) Replace the main PC board assembly. |
| 13. The thread cannot be wound on the bobbin. | 1) Is the resistance between both ends of the bobbin winder switch connector (CN1) 1 Ω or less when thread is wound and ∞ (infinite) in other cases?<br>2) Is bobbin winder mounted correctly?<br>3) Others | 1) Replace the bobbin winder switch assembly.<br>2) Adjust. (Refer to page 41.)<br>3) Replace the main PC board assembly. |
| 14. The LED or 7-segment LED does not illuminate. | 1) Is the operation PC board connector (C15) correctly connected?<br>2) Others | 1) Confirm.<br>2) Replace the operation PC board assembly or main PC board assembly. |
| 15. The side cutter pattern cannot be stitched properly. <826> | 1) Is the resistance between both ends of the side cutter switch connector (CN10) 1 Ω or less when operating and ∞ (infinite) when stopped?<br>2) Is side cutter mounted correctly?<br>3) Others | 1) Replace the side cutter switch holder assembly.<br>2) Adjust. (Refer to pages 53, 54.)<br>3) Replace the main PC board assembly. |

# V. HOW TO CONNECT THE CONNECTORS ON P.C. BOARDS

## CONTENTS


1. Power supply unit assembly <835, 826, 825> ..... 67
2. Main P.C. board assembly <835> ..... 68
3. Main P.C. board assembly <826> ..... 69
4. Main P.C. board assembly <825> ..... 70
5. Operation P.C. board assembly <835> ..... 70
6. Operation P.C. board assembly <826, 825> ..... 72
7. Dial P.C. board assembly <835> ..... 73
8. NP P.C. board assembly <835, 826, 825> ..... 73
9. SS P.C. board assembly <835, 826, 825> ..... 73

# 1. Power supply unit assembly <835, 826, 825>

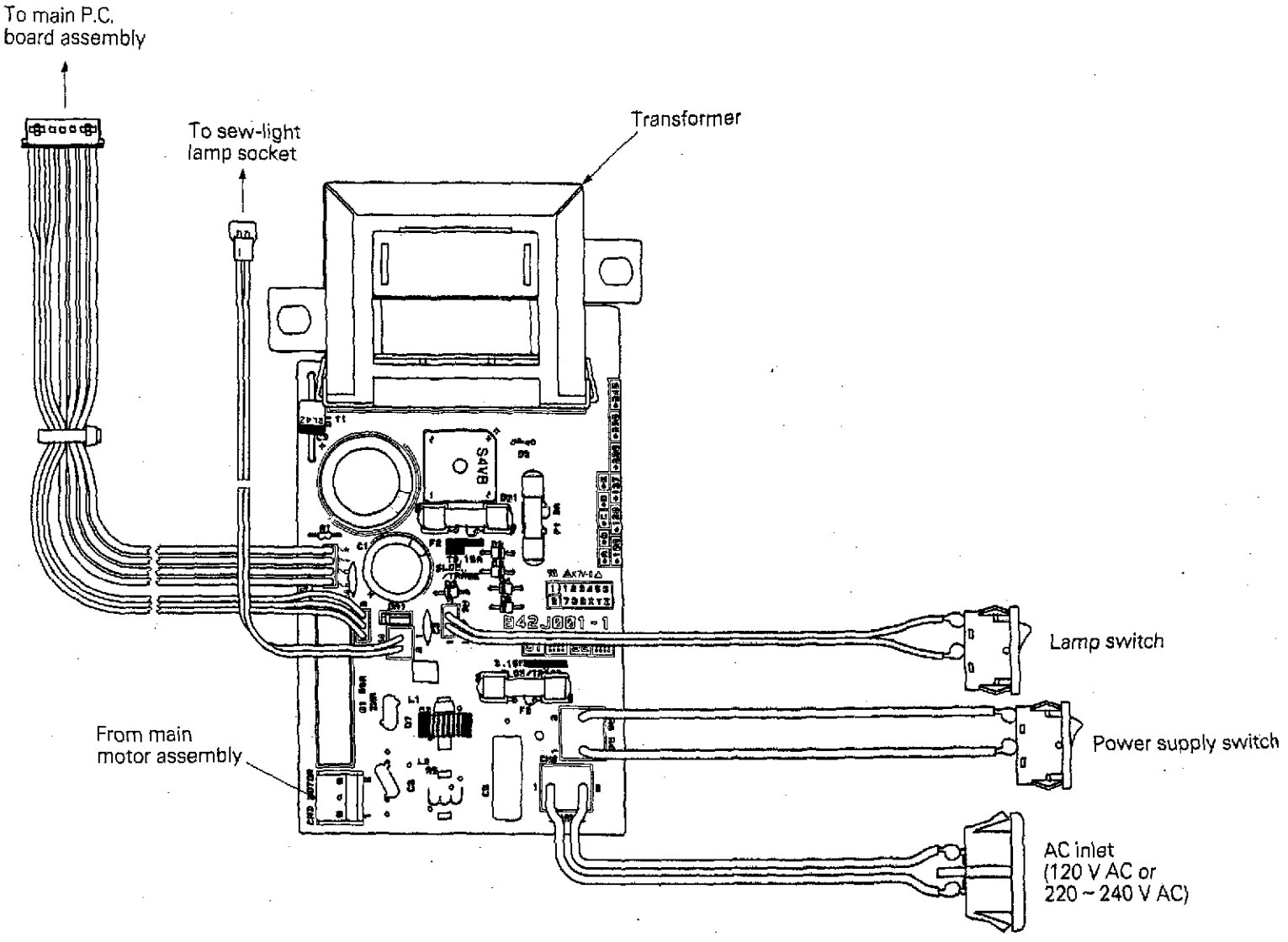

# 2. Main P.C. board assembly <835>

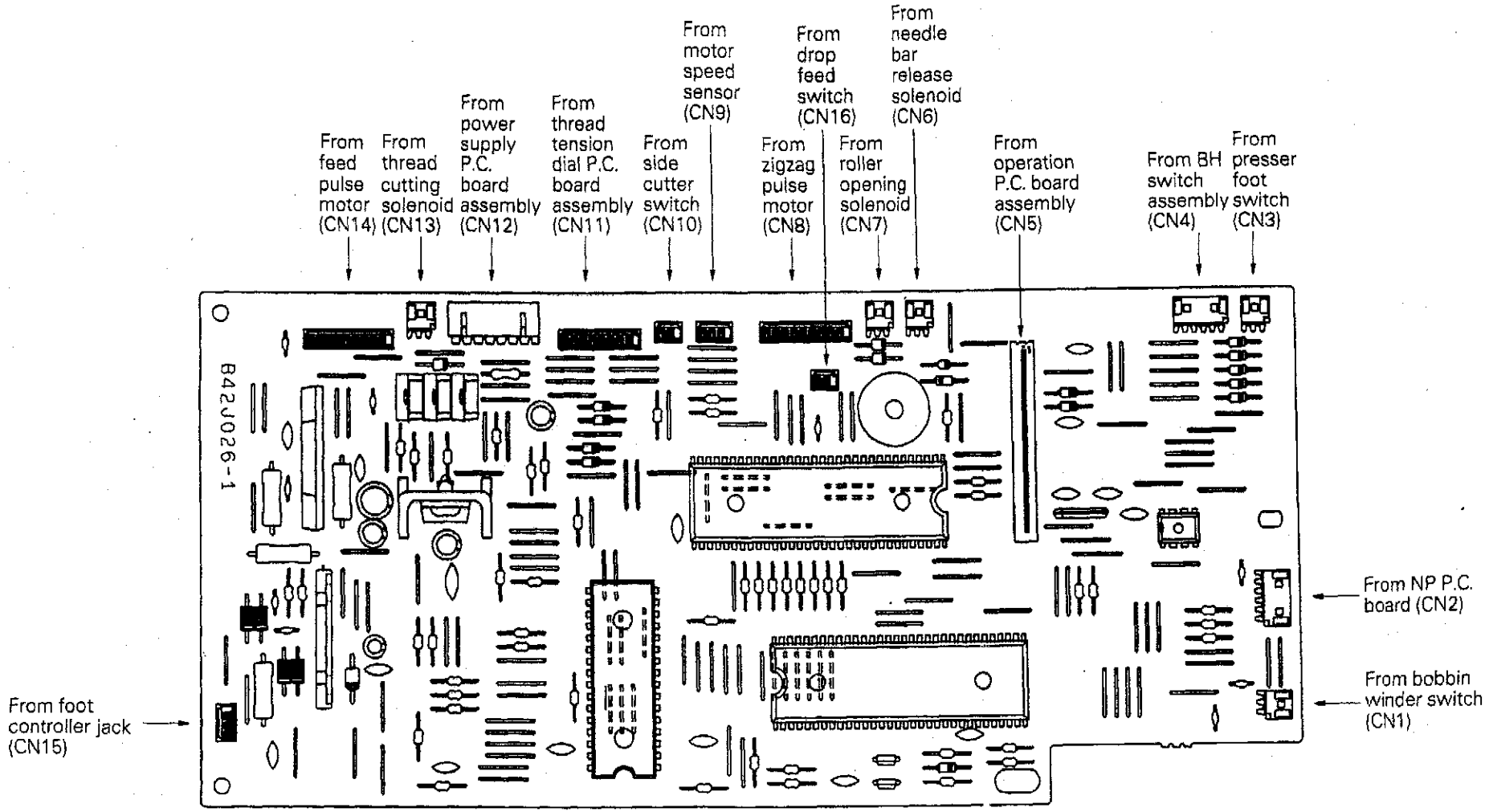

# 3. Main P.C. board assembly <826>

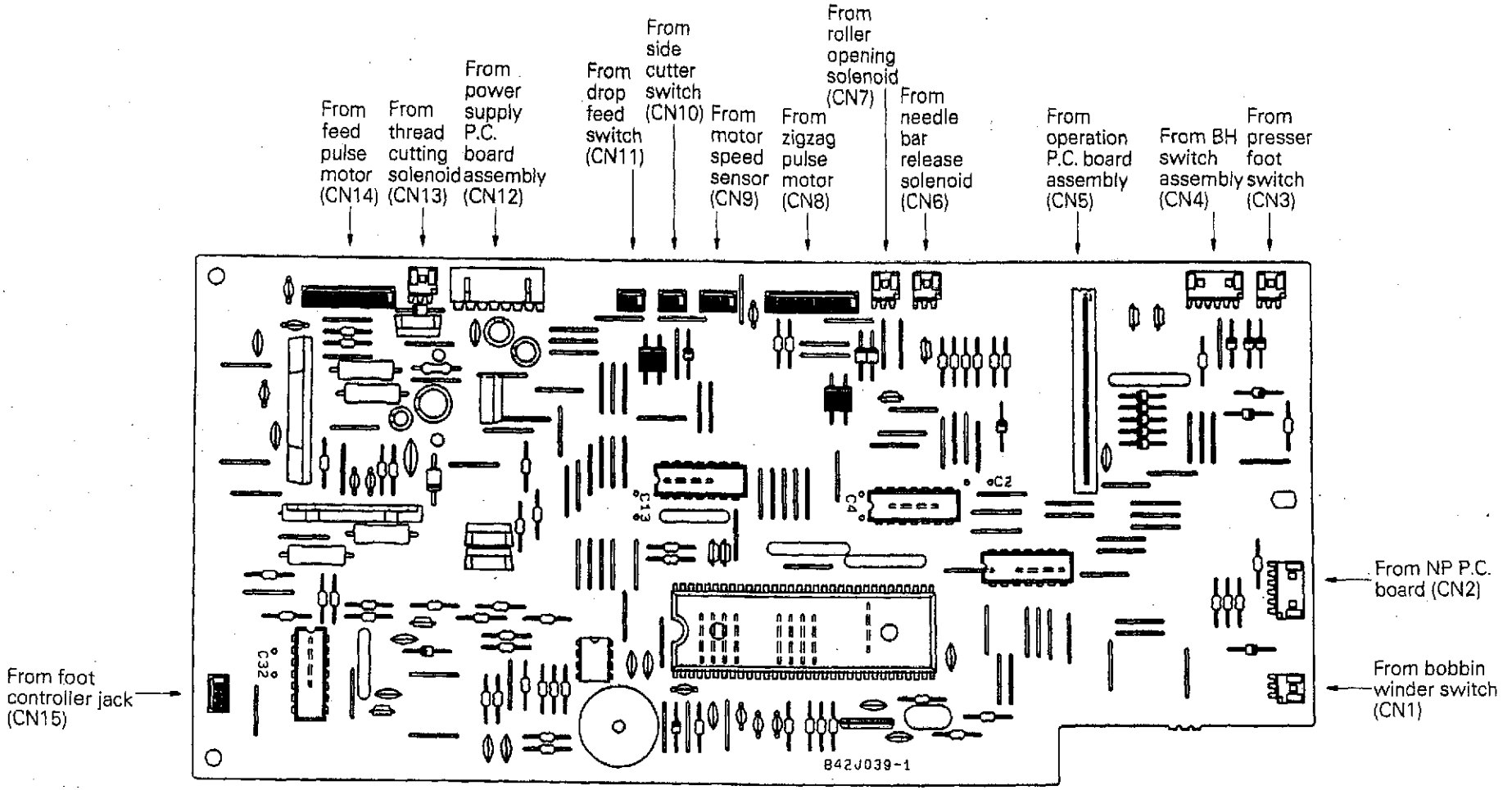

# 4. Main P.C. board assembly <825>

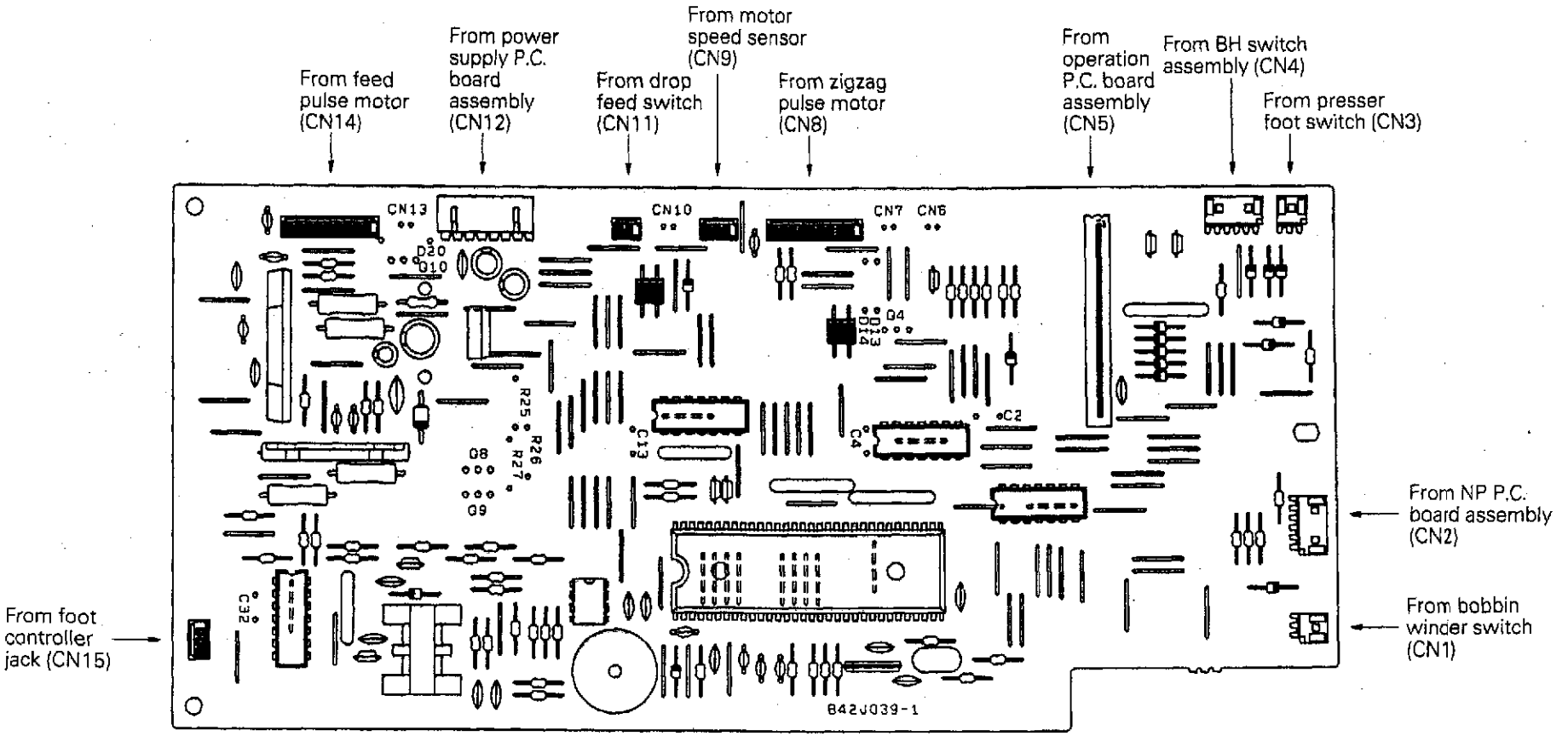

# 5. Operation P.C. board assembly <835>

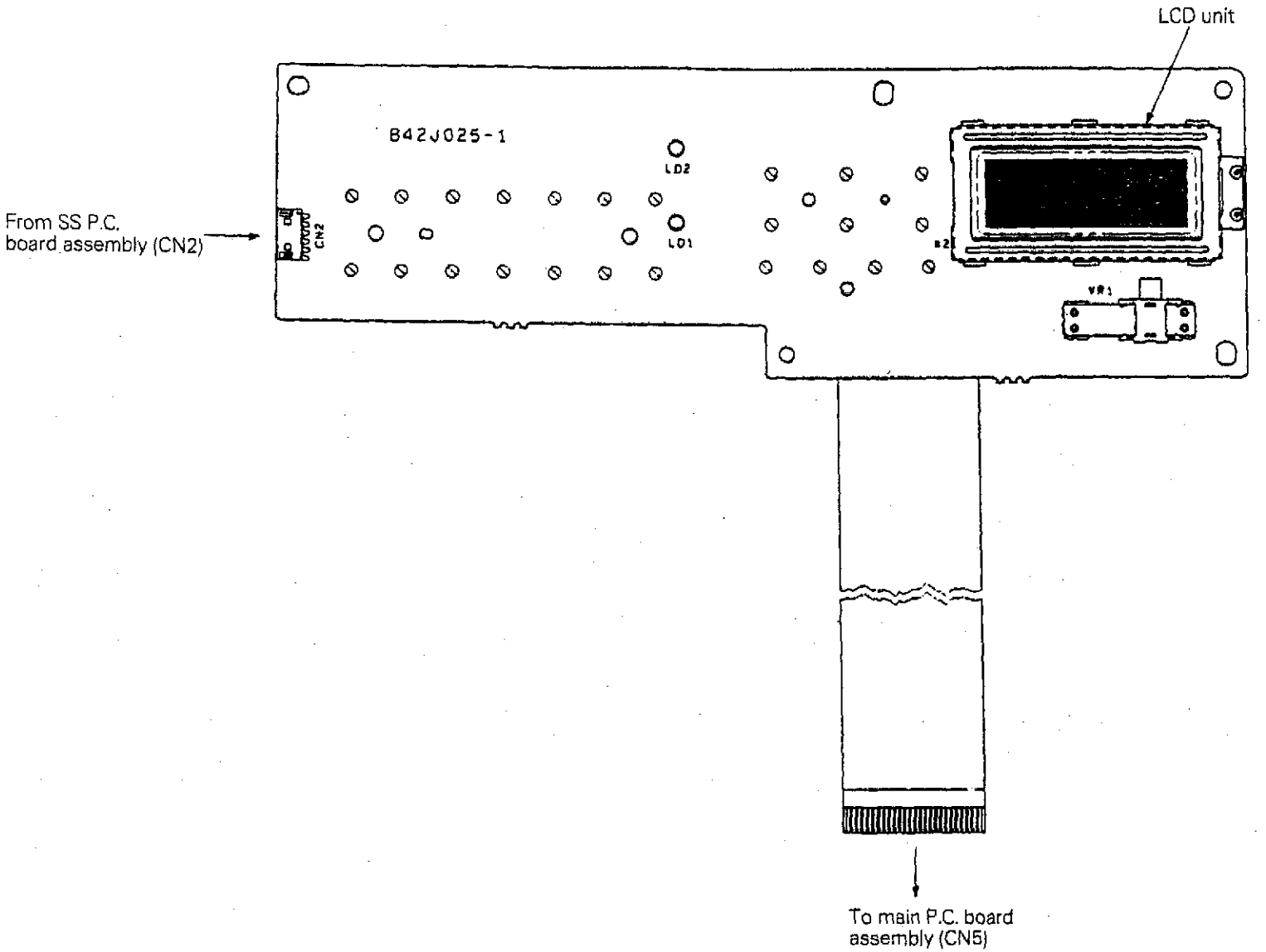

# 6. Operation P.C. board assembly <826, 825>

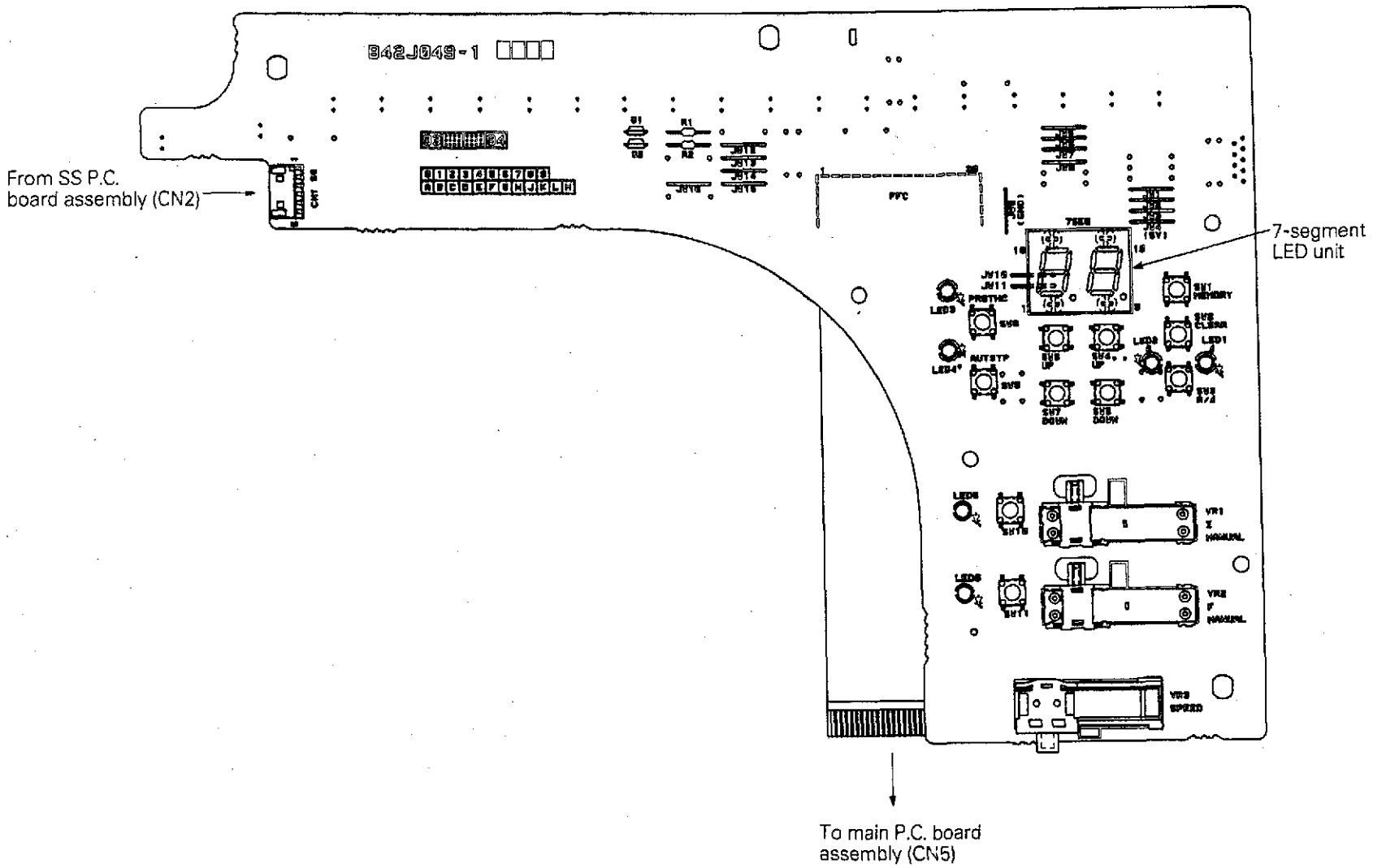

## 7. Dial P.C. board assembly <835>

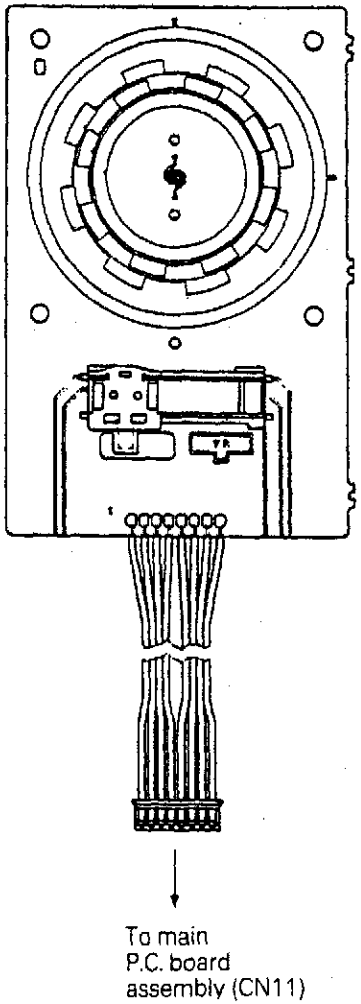


## 8. NP P.C. board assembly <835, 826, 825>

## 9. SS P.C. board assembly <835, 826, 825>

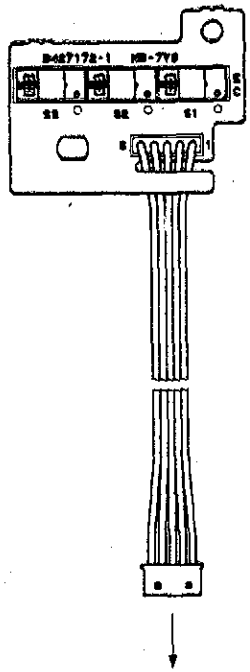


NP P.C. board assembly

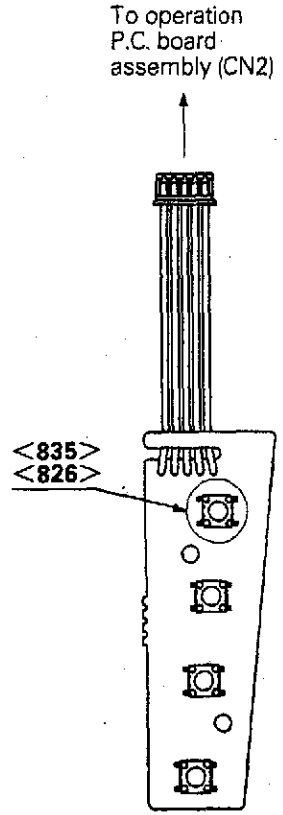


SS P.C. board assembly

H3030660
Printed in Japa