brother

SERVICE MANUAL FOR PROFESSIONAL EMBROIDERY MACHINE

PR600

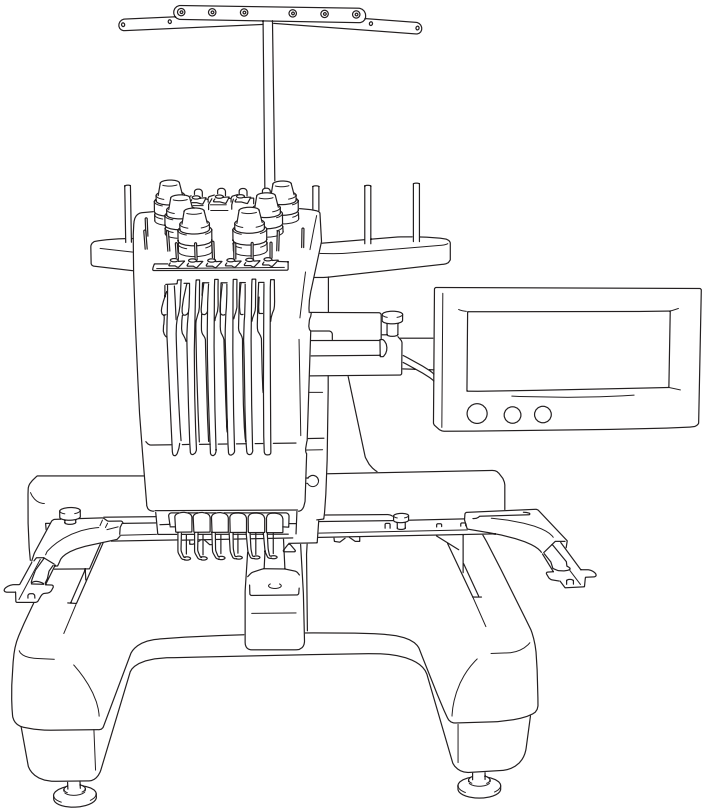

The CD-ROM version of service manual contains movie!

CD-ROM version of service manual contains movies "2. Disassembly" "3. Assembly".Please click on mark to start the movie.

10.2003.

www.promelectroavtomat.ru

GENERAL INFORMATION

This service manual has been compiled for explaining repair procedures of this MODEL.
This was produced based on up-to-date product specifications at the time of issue, but there may have been changes of specifications for the purpose of improvements.
Contact manufacturer or local sales company for information concerning such changes.

Brother Industries, Ltd.
Nagoya, Japan

CAUTION

1. Always use rubber gloves when handling printed circuit boards and never touch the metal portion of a printed circuit board with bare hands.
2. Keep your body earthed in order to avoid generating static electricity.
3. Pack printed circuit boards in aluminum foil and avoid subjecting them to any form of impact during storage or transportation.
4. Do not touch or damage the metal portion of a printed circuit board with a screwdriver or any other tool while making repairs or the like.

www.promelectroavtomat.ru

1. Outline of Mechanism .....1 - 1

Main Mechanisms .....1 - 2
Driveline .....1 - 3
Driveline .....1 - 4
Positions of electronic components .....1 - 5
Control system block diagram .....1 - 7
Operation of other electronic components .....1 - 8
Using the thread .....1 - 9

2. Disassembly .....2 - 1

Main parts .....2 - 2

Motor cover and carriage cover removal .....2 - 3
Bed cover removal .....2 - 4
Arm cover R removal .....2 - 5
Arm cover L removal .....2 - 6
Base cover R removal .....2 - 7
Base cover L removal .....2 - 8
Oil box holder removal .....2 - 8
Main PCB assembly removal .....2 - 9
Spool stand frame final assembly removal .....2 - 9
Operation panel assembly removal .....2 - 9
Thread take-up cover removal .....2 - 10
Tension base removal .....2 - 10
Needle plate removal .....2 - 11
Needle plate base assembly removal .....2 - 11
Needle plate base disassembly .....2 - 11
Picker bracket removal .....2 - 12
Picker bracket disassembly .....2 - 12
Rotary hook removal .....2 - 12
Cutter unit final assembly and picker final assembly removal .....2 - 13

Feed unit .....2 - 14

T-belt (Y-guide) removal .....2 - 15
Feed final assembly removal .....2 - 16
Y-motor final assembly removal .....2 - 17
Y-motor disassembly .....2 - 17
Y-driving shaft assembly removal .....2 - 18
Cord grip removal .....2 - 18
FFC and X-area sensor assembly removal .....2 - 19
Y-frame spacer and X-belt presser removal .....2 - 19
X-feed frame B removal .....2 - 19
X-carriage A assembly and X-carriage B assembly removal .....2 - 20
X-sensor dog removal .....2 - 20
Hoop sensor removal .....2 - 21
X-guide shaft removal .....2 - 21
T-belt (Y-drive) removal .....2 - 22
Feed frame disassembly .....2 - 22
Y-carriage L disassembly .....2 - 23
Y-carriage R disassembly .....2 - 24
Connect PCB disassembly .....2 - 24

www.promelectroavtomat.ru

Needle thread unit ..... 2 - 25

Needle thread assembly removal ..... 2 - 26
Hook holder assembly removal ..... 2 - 26
Rack and hook holder link removal ..... 2 - 27
Thread motor assembly removal ..... 2 - 28

Needle bar change unit ..... 2 - 29

Change box removal ..... 2 - 30
Change box disassembly (Step 1) ..... 2 - 30
Change box disassembly (Step 2) ..... 2 - 31

Thread wiper unit ..... 2 - 32

Thread presser base removal ..... 2 - 33
Thread presser base disassembly ..... 2 - 33
Wiper set assembly removal ..... 2 - 33
Wiper guide and wiper sensor removal ..... 2 - 34
Wiper set disassembly ..... 2 - 35

Needle bar unit ..... 2 - 36

Needle bar case final assembly removal ..... 2 - 37
Change roller base assembly removal ..... 2 - 37
Case guide D removal ..... 2 - 37
Thread take-up lever assembly removal ..... 2 - 38
Thread take-up lever disassembly ..... 2 - 38
Needle bar removal ..... 2 - 39
Needle bar case disassembly ..... 2 - 39
Case positioning plate assembly removal ..... 2 - 39
Case positioning plate disassembly ..... 2 - 40
Case bracket assembly removal ..... 2 - 40
Case bracket disassembly ..... 2 - 41
Case guide UL disassembly ..... 2 - 41

Upper shaft unit ..... 2 - 42

Main motor final assembly removal ..... 2 - 43
Main motor disassembly ..... 2 - 43
Driving jump assembly removal ..... 2 - 44
Driving jump disassembly ..... 2 - 45
Base needle bar removal ..... 2 - 46
J-clamp disassembly ..... 2 - 46
Presser foot vertical base disassembly ..... 2 - 47
Thread take-up driving lever final assembly removal ..... 2 - 47
Thread take-up driving lever disassembly ..... 2 - 48
Main shaft sensor final assembly removal ..... 2 - 49
Crank rod removal ..... 2 - 49
Pressure foot driving shaft assembly removal ..... 2 - 50
Presser foot driving shaft disassembly ..... 2 - 50
Upper shaft assembly removal ..... 2 - 51

Lower shaft unit ..... 2 - 52

Arm bed and base frame disconnection ..... 2 - 53
Idle pulley assembly removal ..... 2 - 53
Idle pulley disassembly ..... 2 - 53
Lower shaft removal ..... 2 - 54

Power unit ..... 2 - 55

Power switch assembly and inlet removal ..... 2 - 56
USB PCB assembly and Y-area sensor assembly removal ..... 2 - 57

www.promelectroavtomat.ru

Power PCB assembly removal ..... 2 - 58
Power PCB disassembly ..... 2 - 58
Adjust-bolt removal ..... 2 - 59

Thread cut unit ..... 2 - 60

Picker disassembly ..... 2 - 61
Cutter unit disassembly (Step 1) ..... 2 - 62
Cutter unit disassembly (Step 2) ..... 2 - 63

Thread tension unit ..... 2 - 64

Loosen the tension nut removal ..... 2 - 65
Tension base bracket removal ..... 2 - 65
Inner thread eyelet base removal ..... 2 - 66
Thread sensor PCB assembly and head PCB assembly removal ..... 2 - 66
Upper thread eyelet base removal ..... 2 - 67
Antenna assembly removal ..... 2 - 67
Antenna disassembly ..... 2 - 68
Spool stand frame disassembly (Step 1) ..... 2 - 69
Spool stand frame disassembly (Step 2) ..... 2 - 69
Thread take-up lever cover disassembly (Step 1) ..... 2 - 70
Thread take-up lever cover disassembly (Step 2) ..... 2 - 71
Thread take-up bracket disassembly ..... 2 - 72

Operation panel ..... 2 - 73

FD assembly removal ..... 2 - 74
FD disassembly (Step 1) ..... 2 - 74
FD disassembly (Step 2) ..... 2 - 75
Operation panel lever assembly removal ..... 2 - 75
Operation panel lever disassembly (Step 1) ..... 2 - 76
Operation panel lever disassembly (Step 2) ..... 2 - 76
Operation panel B removal ..... 2 - 77
Panel PCB assembly removal ..... 2 - 78
LCD removal ..... 2 - 79
Touch panel removal ..... 2 - 79
Button removal ..... 2 - 80

3. Assembly ..... 3 - 1

Operation panel ..... 3 - 2

Button attachment ..... 3 - 3
Touch panel attachment ..... 3 - 3
LCD attachment ..... 3 - 4
Panel PCB assembly attachment ..... 3 - 5
Operation panel B attachment ..... 3 - 6
Operation panel lever assembly (Step 1) ..... 3 - 7
Operation panel lever assembly (Step 2) ..... 3 - 7
Operation panel lever assembly attachment ..... 3 - 8
FD assembly (Step 1) ..... 3 - 9
FD assembly (Step 2) ..... 3 - 10
FD assembly attachment ..... 3 - 11

Thread tension unit ..... 3 - 12

Thread take-up bracket assembly ..... 3 - 13
Thread take-up lever cover assembly (Step 1) ..... 3 - 14
Thread take-up lever cover assembly (Step 2) ..... 3 - 15
Spool stand frame assembly (Step 1) ..... 3 - 16
Spool stand frame assembly (Step 2) ..... 3 - 16

www.promelectroavtomat.ru

Antenna assembly (Step 1) ..... 3 - 17
Antenna assembly (Step 2) ..... 3 - 17
Antenna assembly attachment ..... 3 - 18
Upper thread eyelet base attachment ..... 3 - 18
Thread sensor PCB assembly and head PCB assembly attachment ..... 3 - 19
Inner thread eyelet base attachment ..... 3 - 20
Tension base bracket attachment ..... 3 - 20
Tension base lead wire assembly attachment ..... 3 - 21
Tension nut attachment ..... 3 - 21

Thread cut unit ..... 3 - 22

Cutter unit assembly (Step 1) ..... 3 - 23
Cutter unit assembly (Step 2) ..... 3 - 24
Picker assembly ..... 3 - 25

Power unit ..... 3 - 26

Adjust bolt attachment ..... 3 - 27
Power PCB assembly ..... 3 - 28
Power PCB assembly attachment ..... 3 - 29
USB PCB assembly and Y-area sensor assembly attachment ..... 3 - 30
Power switch assembly and inlet attachment ..... 3 - 31

Lower shaft unit ..... 3 - 32

Lower shaft attachment ..... 3 - 33
Idle pulley assembly ..... 3 - 34
Idle pulley assembly attachment ..... 3 - 34
Connection of arm bed and base frame ..... 3 - 35

Upper shaft unit ..... 3 - 36

Upper shaft assembly attachment ..... 3 - 37
Presser foot driving shaft assembly ..... 3 - 38
Presser foot driving shaft assembly attachment ..... 3 - 39
Crank rod assembly attachment ..... 3 - 40
Main shaft sensor final assembly attachment ..... 3 - 41
Thread take-up driving lever final assembly ..... 3 - 42
Thread take-up driving lever final assembly attachment ..... 3 - 43
Presser foot vertical base final assembly ..... 3 - 44
Vertical set assembly ..... 3 - 45
Base needle bar attachment ..... 3 - 46
Driving jump assembly (1) ..... 3 - 47
Driving jump assembly (2) ..... 3 - 48
Driving jump assembly attachment ..... 3 - 49
Tension pulley assembly attachment ..... 3 - 49
Main motor final assembly ..... 3 - 50
Main motor final assembly attachment ..... 3 - 50

Needle bar unit ..... 3 - 51

Case guide UL assembly ..... 3 - 52
Case bracket assembly ..... 3 - 53
Case bracket assembly attachment ..... 3 - 54
Case positioning plate assembly ..... 3 - 55
Case positioning plate assembly attachment ..... 3 - 55
Needle bar case final assembly ..... 3 - 55
Needle bar attachment ..... 3 - 56
Thread take-up lever assembly ..... 3 - 57
Thread take-up lever assembly attachment ..... 3 - 58
Case guide D attachment ..... 3 - 59

www.promelectroavtomat.ru

Change roller base assembly attachment ..... 3 - 59
Needle bar case final assembly attachment ..... 3 - 60

Thread wiper unit ..... 3 - 61

Wiper set assembly ..... 3 - 62
Wiper guide and wiper sensor attachment ..... 3 - 63
Wiper set assembly attachment ..... 3 - 64
Thread presser base assembly ..... 3 - 65
Thread presser base attachment ..... 3 - 65

Needle bar change unit ..... 3 - 66

Change box assembly (Step 1) ..... 3 - 67
Change box assembly (Step 2) ..... 3 - 68
Change box assembly (Step 3) ..... 3 - 69
Change box assembly attachment ..... 3 - 69

Needle thread unit ..... 3 - 70

Thread motor assembly attachment ..... 3 - 71
Rack assembly and hook holder link attachment ..... 3 - 72
Hook assembly ..... 3 - 72
Needle thread assembly attachment ..... 3 - 73

Feed unit ..... 3 - 74

Connect PCB final assembly ..... 3 - 75
Y-carriage R assembly ..... 3 - 76
Y-carriage L assembly ..... 3 - 77
Feed frame assembly attachment ..... 3 - 78
T-belt (X-drive) attachment ..... 3 - 79
X-guide shaft attachment ..... 3 - 80
Hoop sensor attachment ..... 3 - 81
X-sensor dog attachment ..... 3 - 82
X-carriage A assembly and X-carriage B assembly attachment ..... 3 - 83
X-feed frame B attachment ..... 3 - 84
Y-frame spacer and X-belt presser attachment ..... 3 - 85
FFC and X-area sensor assembly attachment ..... 3 - 86
Cord grip attachment ..... 3 - 87
Y driving shaft assembly attachment ..... 3 - 88
Y-motor final assembly ..... 3 - 89
Y motor final assembly attachment ..... 3 - 90
Feed final assembly attachment ..... 3 - 91
T-belt (Y-guide) attachment ..... 3 - 92

Main unit ..... 3 - 93

Cutter unit final assembly and picker final assembly attachment ..... 3 - 94
Rotary hook attachment ..... 3 - 95
Picker bracket final assembly ..... 3 - 95
Picker bracket final assembly attachment ..... 3 - 95
Needle plate base assembly ..... 3 - 96
Needle plate base assembly attachment ..... 3 - 97
Needle plate attachment ..... 3 - 97
Tension base attachment ..... 3 - 98
Thread take-up lever cover attachment ..... 3 - 99
Operation panel assembly attachment ..... 3 - 99
Spool stand frame final assembly attachment ..... 3 - 100
Main PCB assembly attachment ..... 3 - 101
Oil box holder attachment ..... 3 - 102
Base cover L attachment ..... 3 - 102

www.promelectroavtomat.ru

Base cover R attachment ..... **3 - 103**
Arm cover L attachment ..... **3 - 104**
Arm cover R attachment ..... **3 - 105**
Bed cover attachment ..... **3 - 106**
Motor cover / carriage cover attachment ..... **3 - 107**

4. Adjustment ..... 4 - 1

Adjustment flow ..... 4 - 2
Bent needle ..... 4 - 3
Blunt needle ..... 4 - 4
Starting test mode / Selecting adjustment test mode ..... 4 - 5
Main board test mode ..... 4 - 6
Panel board test mode ..... 4 - 12
How to read needle bar numbers on bar code ..... 4 - 15
Motor belt tension adjustment ..... 4 - 16
Timing belt tension adjustment ..... 4 - 17
Needle position adjustment (front/back) ..... 4 - 18
Needle position adjustment (right/left) ..... 4 - 19
Needle bar rising length and needle space adjustment ..... 4 - 20
Needle bar height adjustment ..... 4 - 21
Rotary hook stopper clearance adjustment ..... 4 - 22
Presser foot height adjustment ..... 4 - 23
Needle bar top dead center adjustment ..... 4 - 24
Needle threader adjustment (up/down) ..... 4 - 25
Needle threader adjustment (right/left) ..... 4 - 26
Needle threading check ..... 4 - 27
Y-belt tension adjustment ..... 4 - 28
X-belt tension adjustment ..... 4 - 29
Picker activation adjustment ..... 4 - 30
Movable knife origin adjustment ..... 4 - 31
Thread presser base up/down position adjustment ..... 4 - 32
Hoop sensor adjustment ..... 4 - 33
XY-guide origin adjustment ..... 4 - 34
Cutter knife engagement adjustment ..... 4 - 35

5. Failure Investigation for Electronic Parts ..... 5 - 1

Error message list ..... 5 - 2
The power is not turned on. ..... 5 - 3

www.promelectroavtomat.ru

The power is not turned on. .....5 - 4
The power is not turned on. .....5 - 5
The touch panel does not work. .....5 - 6
The panel switch does not work. .....5 - 7
The needle bar does not move normally. .....5 - 8
Thread breakage detection does not function normally. .....5 - 9
The hoop does not move normally. .....5 - 10
The hoop does not move normally. .....5 - 11
The main shaft does not rotate normally. .....5 - 12
Thread is not cut normally. .....5 - 13
The wiper does not function normally. .....5 - 14
A needle is not threaded normally. .....5 - 15
The picker does not function normally. .....5 - 16
The floppy disk cannot be used normally. .....5 - 17
Card cannot be used normally. .....5 - 18
Universal serial bus (USB) cannot be used normally. .....5 - 19
The hoop sensor does not function normally. .....5 - 20
The hoop sensor does not function normally. .....5 - 21
The hoop sensor does not function normally. .....5 - 22
Error message .....5 - 23
Error message .....5 - 24
Error message .....5 - 25
Error message .....5 - 26
Error message .....5 - 27

6. Maintenance .....6 - 1

7. Special Instructions of Wiring .....7 - 1

www.promelectroavtomat.ru

1 Outline of Mechanism

Main Mechanisms ..... 1 - 2
Driveline ..... 1 - 3
Positions of electronic components..... 1 - 5
Control system block diagram..... 1 - 7
Operation of other electronic components ..... 1 - 8
Using the thread..... 1 - 9

www.promelectroavtomat.ru

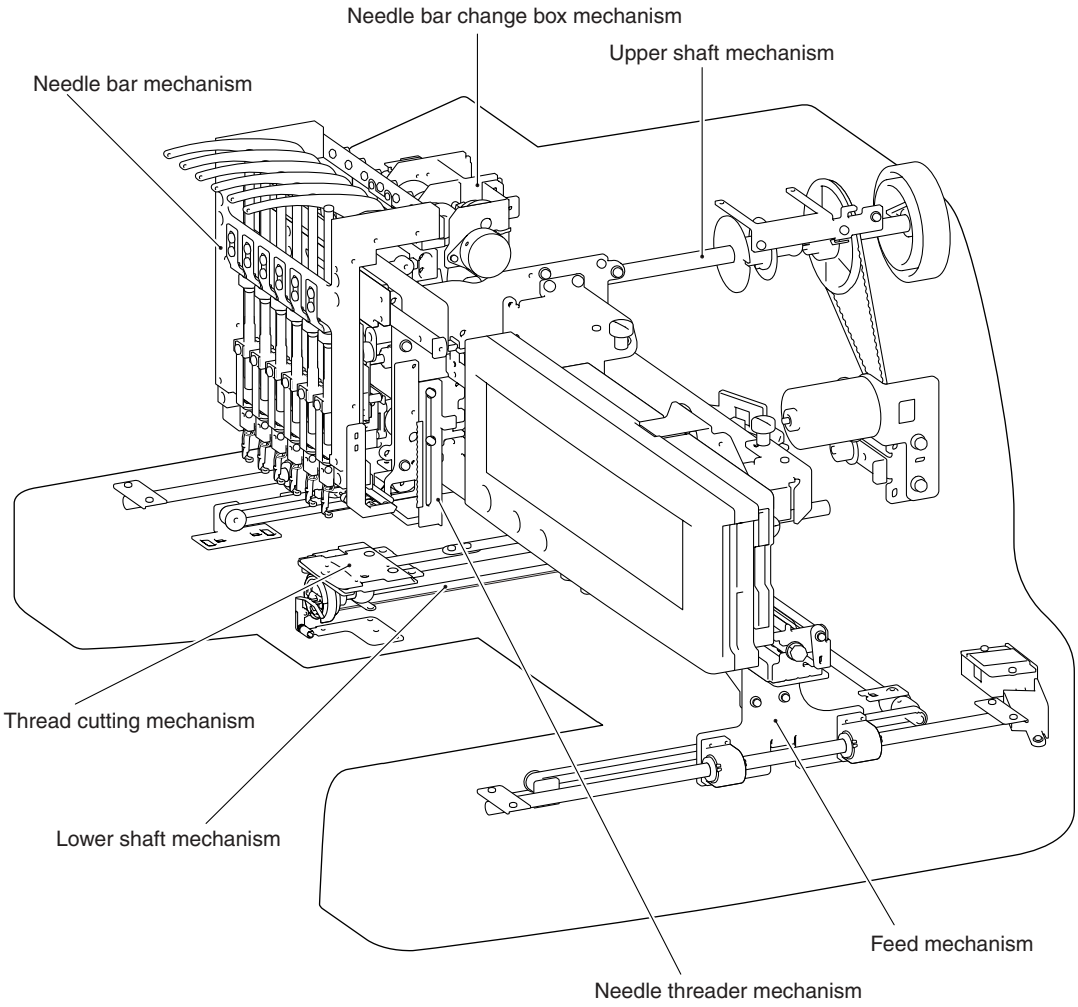

www.promelectroavtomat.ru

A) Up and down movement of needle bar, movement of presser foot thread take-up mechanism

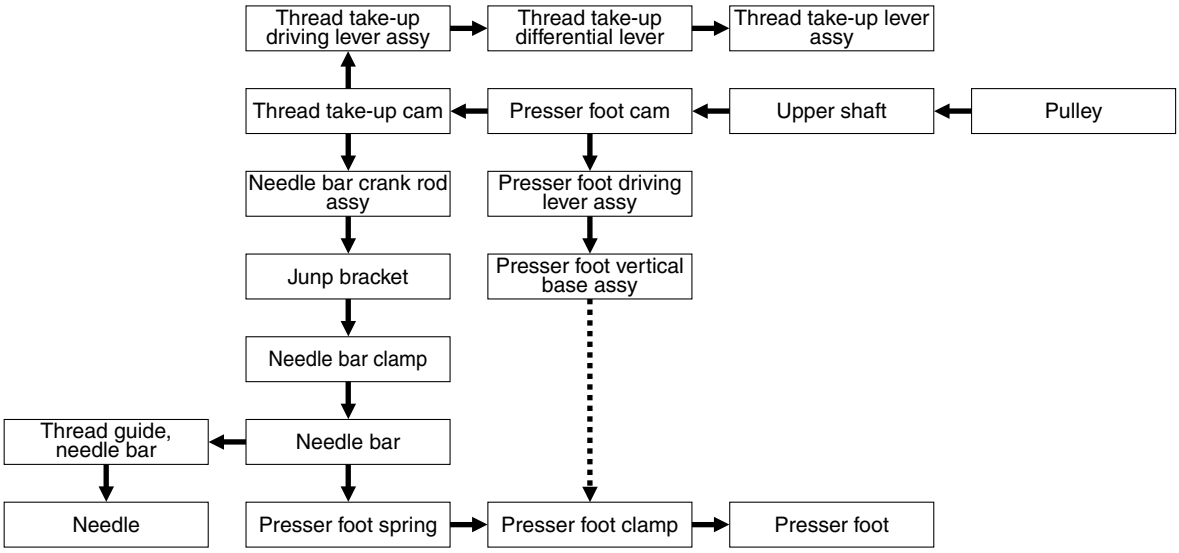

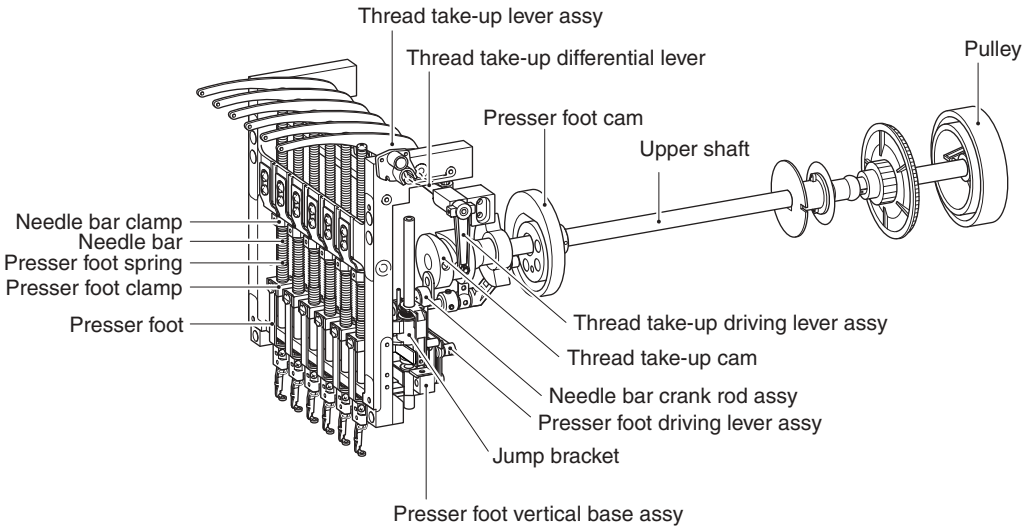

www.promelectroavtomat.ru

B) Movement of rotary hook

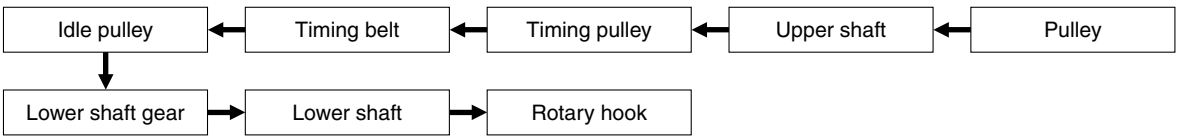

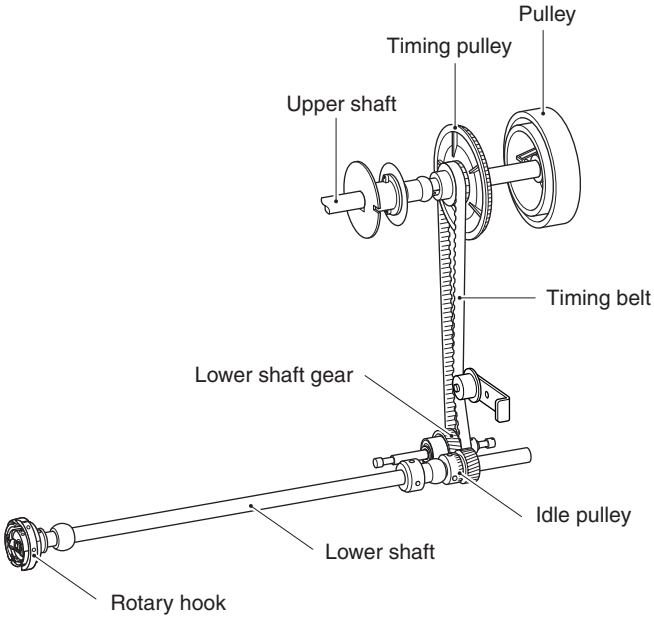

www.promelectroavtomat.ru

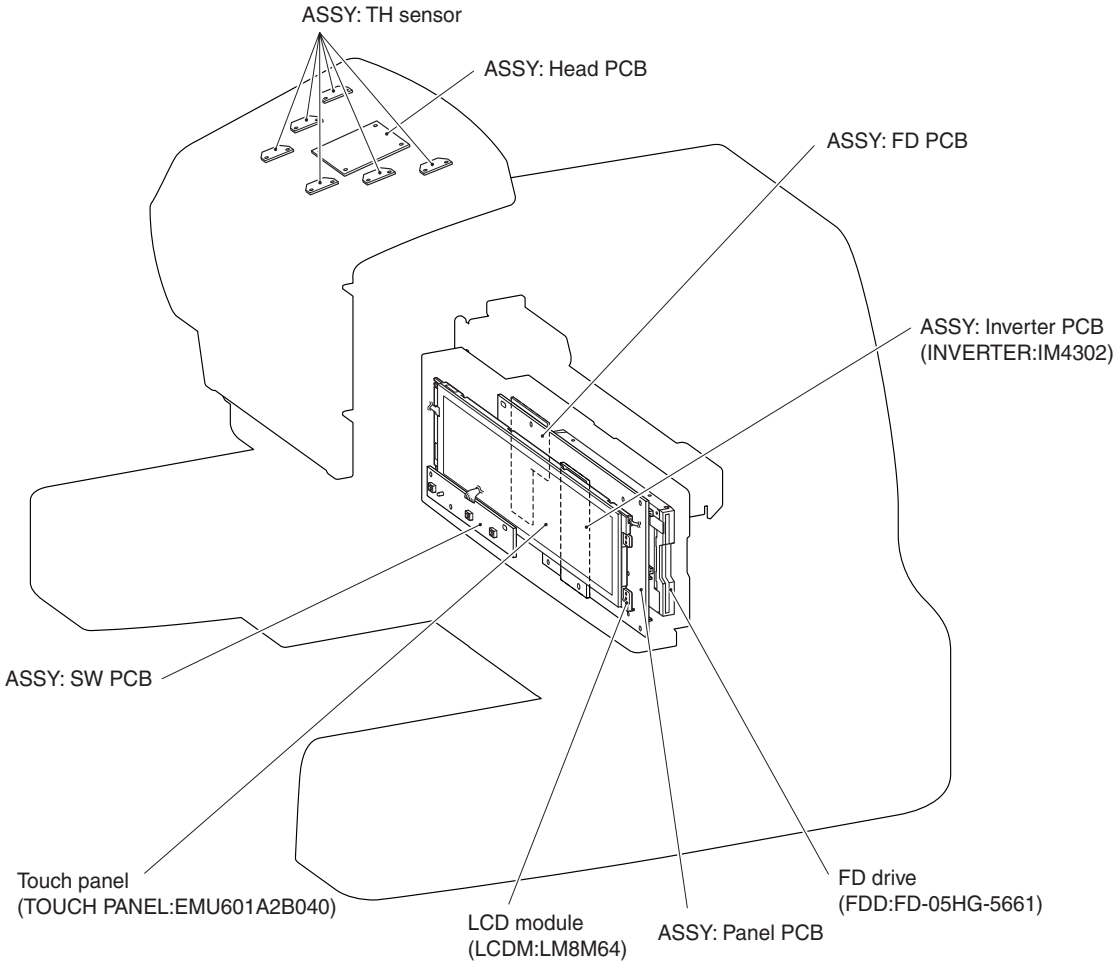

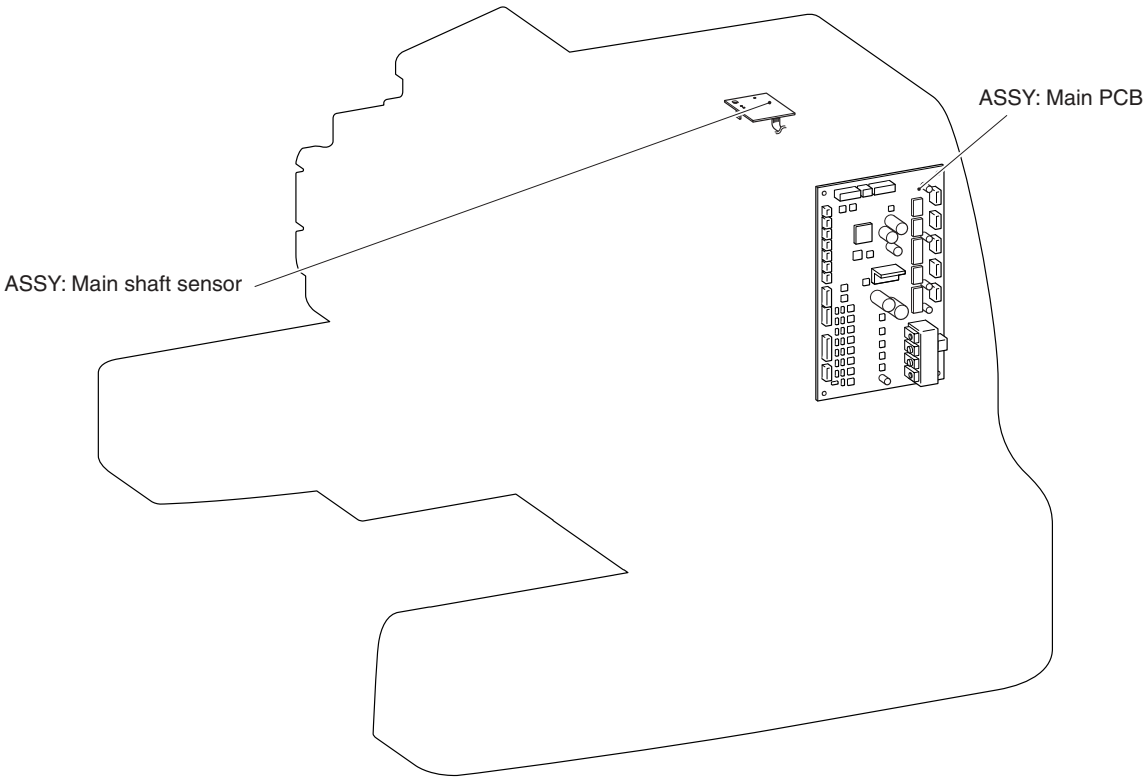

www.promelectroavtomat.ru

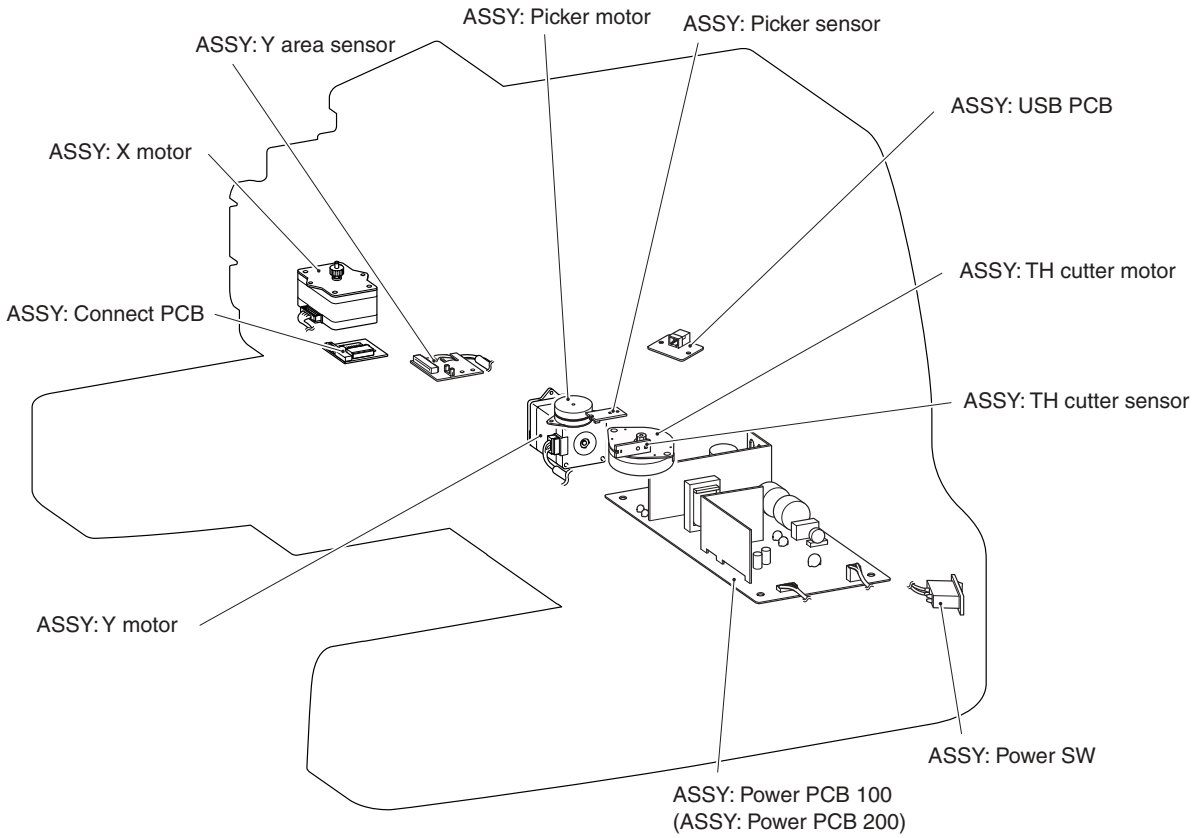

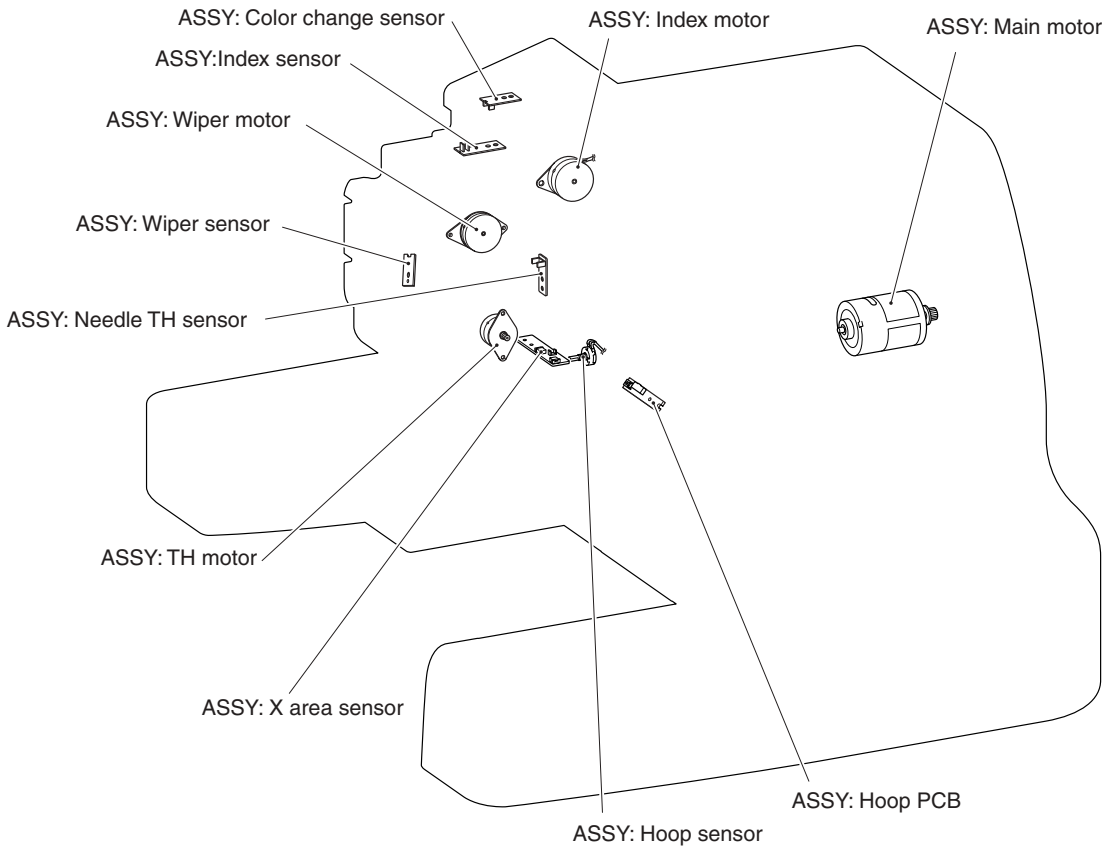

www.promelectroavtomat.ru

Control system block diagram

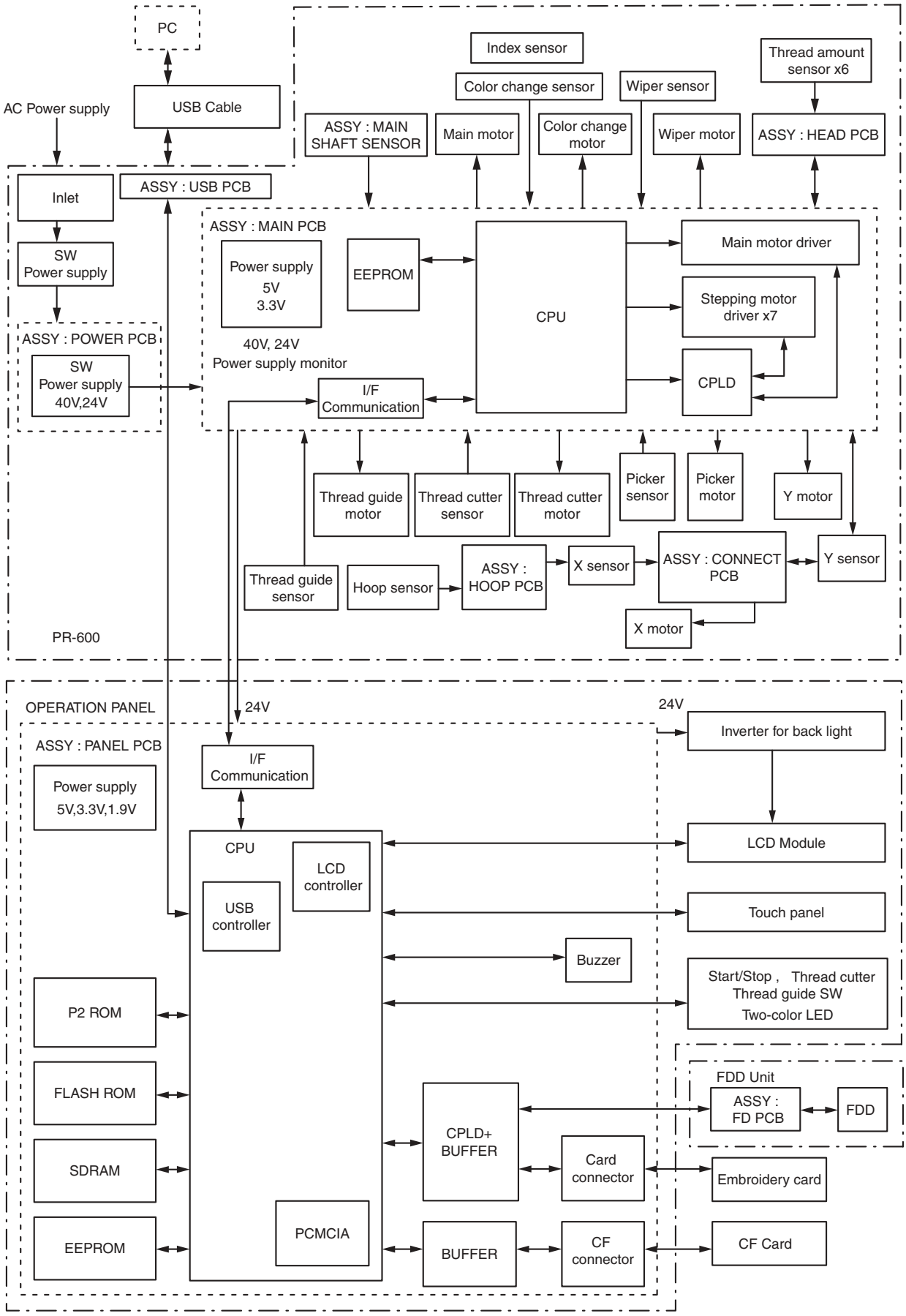

www.promelectroavtomat.ru

Start/stop switch	This switch is used to start and stop the sewing machine.
Thread cut switch	This switch is used to cut thread. Pressing this switch starts the sewing machine, cuts thread, and stops the machine at the position where the spindle stops.
Needle thread switch	This switch is used to thread a needle. Pressing this switch moves the needle bar to the thread guide position, and pressing it again threads the needle and then returns the needle bar to its original position.
Hoop sensor	This sensor detects the position of the arm when attaching the hoop, in order to identify the hoop.
Stop position sensor, A/B phase sensor	These sensors detect the angle of the main shaft and the rotational speed.
Index sensor, color change sensor	These sensors detect the color change position.
Thread quantity sensor	This sensor detects the consumption of upper thread. It also detects upper/lower thread breakage indicated by the consumption of upper thread.
Wiper sensor	This sensor detects the position of the wiper.
Picker sensor	This sensor detects the position of the picker.
Thread cutter sensor	This sensor detects the position of the movable knife that cuts the thread.
Needle thread sensor	This sensor detects the position of the thread guide.
X sensor (Y sensor)	This sensor detects the position of the X (Y) guide to move the hoop.

www.promelectroavtomat.ru

www.promelectroavtomat.ru

www.promelectroavtomat.ru

2 Disassembly

Main unit

Main parts ..... 2 - 2
Feed unit ..... 2 - 14
Needle thread unit ..... 2 - 25
Needle bar change unit ..... 2 - 29
Thread wiper unit ..... 2 - 32
Needle bar unit ..... 2 - 36
Upper shaft unit ..... 2 - 42
Lower shaft unit ..... 2 - 52
Power unit ..... 2 - 55
Thread cut unit ..... 2 - 60
Thread tension unit ..... 2 - 64
Operation panel ..... 2 - 73

www.promelectroavtomat.ru

Main parts

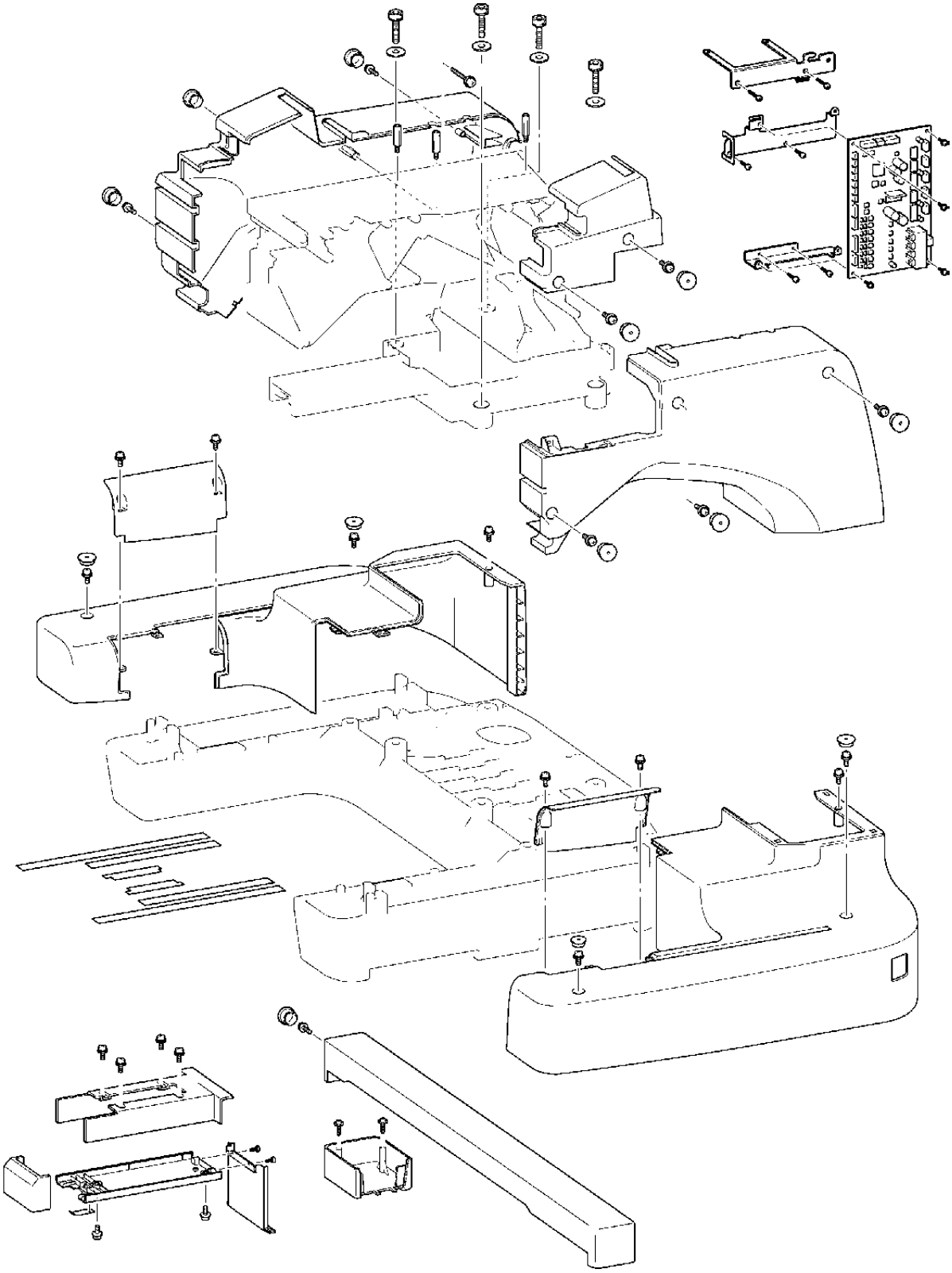

www.promelectroavtomat.ru

1 Motor cover and carriage cover removal

1. Remove the screw cover ①.
2. Remove the screw ❶, and then remove the carriage cover ②.
3. Remove the 2 screws ❷, and then remove the motor cover ③.

Start movie clip (CD-ROM version only)

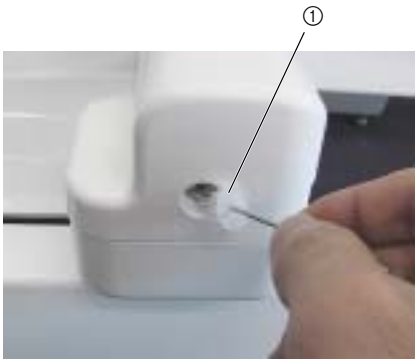

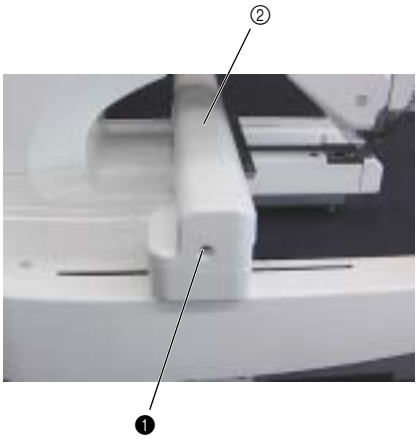

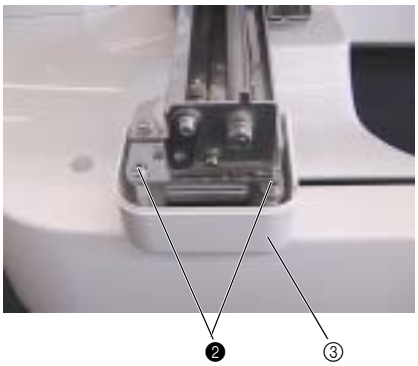

www.promelectroavtomat.ru

2 Bed cover removal

1. Remove the 2 screws ❶, and then remove the bed cover bottom assembly ①.
2. Remove the 2 screws ❷, and then remove the bed cover lid ② from the bed cover bottom assembly.
3. Remove the hinged door ③ and the spring ④ from the bed cover bottom assembly.
4. Remove the 4 screws ❸, and then remove the bed cover top ⑤ and the bed cover ⑥.

Start movie clip (CD-ROM version only)

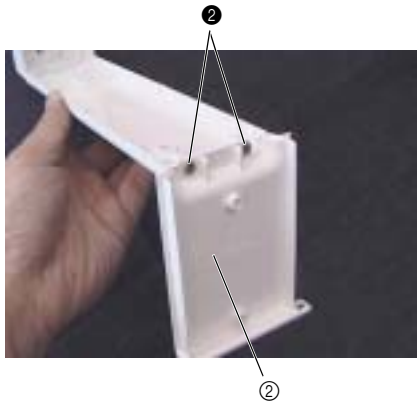

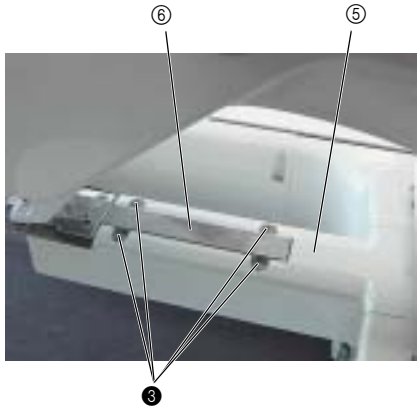

www.promelectroavtomat.ru

3 Arm cover R removal

1. Remove the 5 screw covers ①.
2. Remove the 2 screws ❶, and then remove the arm cover R lid ②.

   ***Key point**
   - Remove the thumb bolt (M4S) from the operation panel assembly before removing arm cover R.

3. Remove the 3 screws ❷, and then remove the arm cover R ③.

Start movie clip (CD-ROM version only)

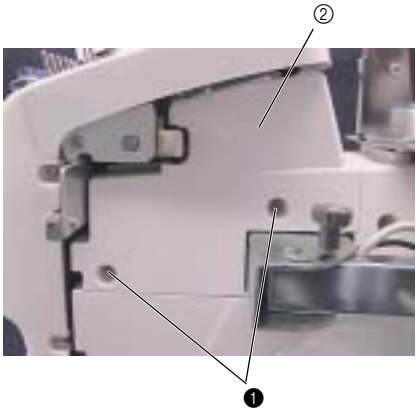

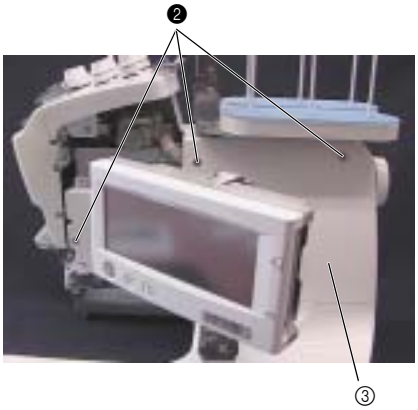

Disassembly

www.promelectroavtomat.ru

4 Arm cover L removal

1. Remove the 3 screw covers ①.
2. Remove the screw inside the cover ❶ and the 2 screws outside the cover ❷, and then remove arm cover L ②.

Start movie clip (CD-ROM version only)

Out side

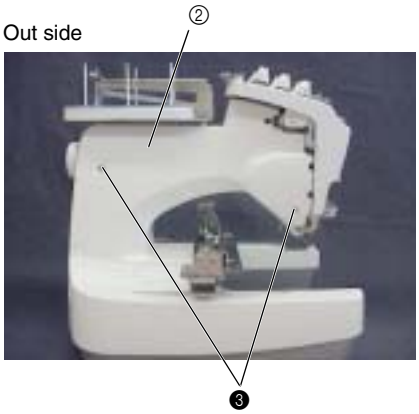

In side

www.promelectroavtomat.ru

5 Base cover R removal

1. Remove the 2 screw covers ①.
2. Remove the 2 screws ❶ and then remove the base cover R lid ②.
3. Removes the 3 screws ❷ and then remove the base cover R ③.

***Key point**

- ·Fully draw the feed final assembly toward you before removing the base cover R.

Start movie clip (CD-ROM version only)

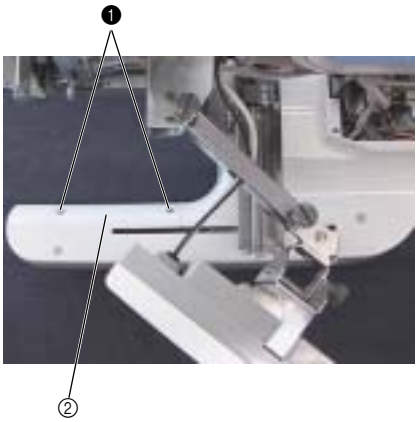

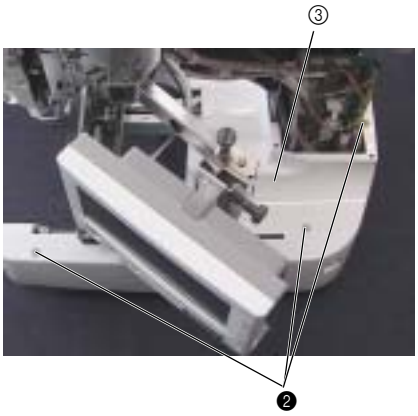

www.promelectroavtomat.ru

6 Base cover L removal

1. Remove the 2 screw covers ①.
2. Remove the 2 screws ❶, and then remove the base cover L lid ②.
3. Remove the 3 screws ❷, and then remove the base cover L ③.

***Key point**

- Fully draw the feed final assembly toward you before removing the base cover L.

Start movie clip (CD-ROM version only)

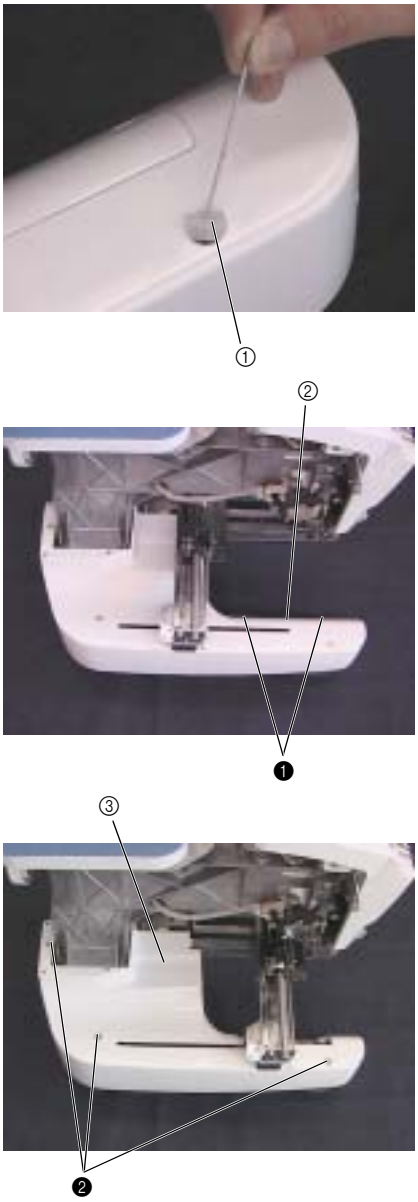

7 Oil box holder removal

1. Remove the 2 screws ❶, and then remove the oil box holder.

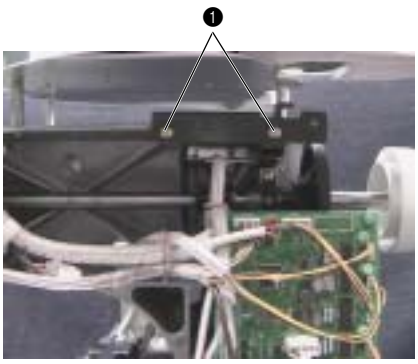

www.promelectroavtomat.ru

8 Main PCB assembly removal

1. Disconnect all connectors from the main PCB.
2. Remove the 4 screws ❶, and then remove the main PCB assembly ①.
3. Remove the 4 screws ❷, and then remove board holder U ② and board holder D ③.

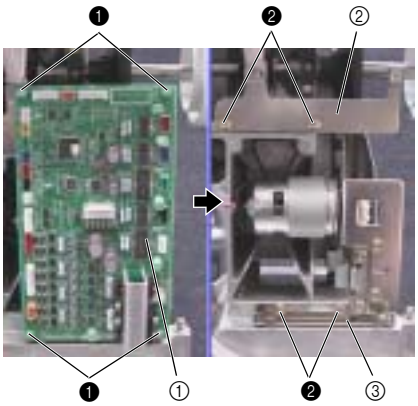

9 Spool stand frame final assembly removal

1. Remove the 3 screws ❶, and then remove the spool stand frame final assembly ①.
2. Remove the 3 studs ②.

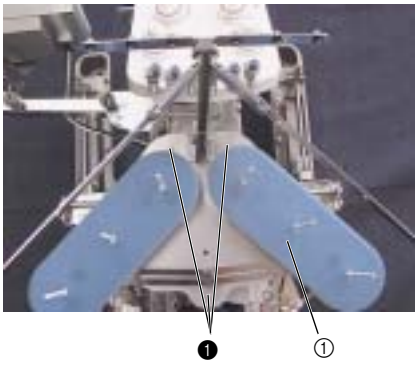

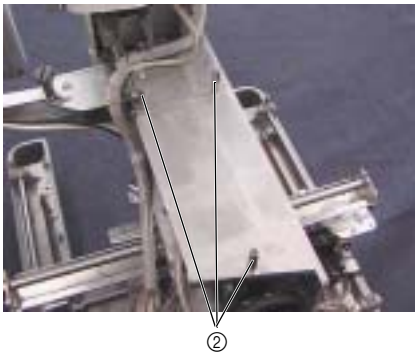

10 Operation panel assembly removal

1. Remove the 6 screws ❶, and then remove the operation panel assembly ①.

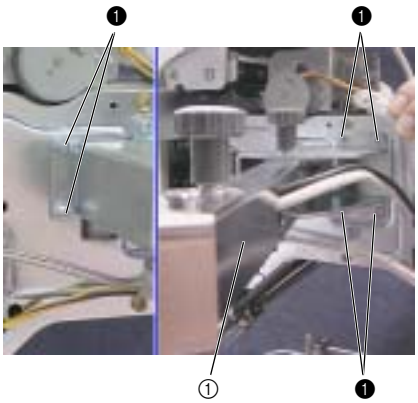

www.promelectroavtomat.ru

11 Thread take-up cover removal

1. Remove the 2 screws ❶, and then remove the thread take-up cover ①.

   ***Key point**
   - The pin protruding from the needle bar case final assembly rests on the inner left side of the thread take-up cover.

Start movie clip (CD-ROM version only)

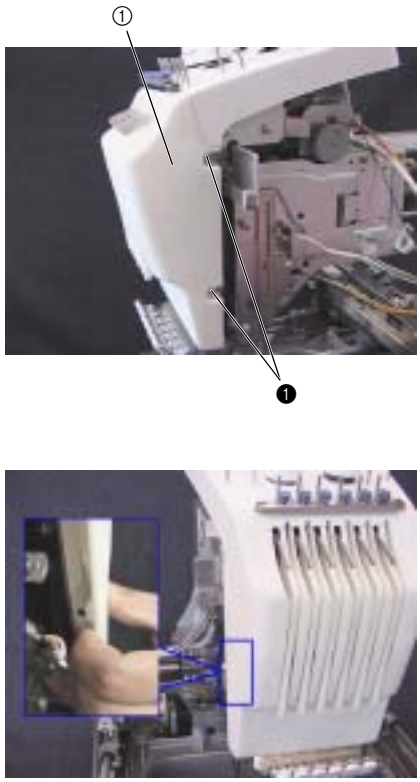

12 Tension base removal

1. Remove the screw ❶, and then remove the cord clamp NK-4N from the arm bed.
2. Remove the 4 screws ❷, and then remove the tension base assembly.

Start movie clip (CD-ROM version only)

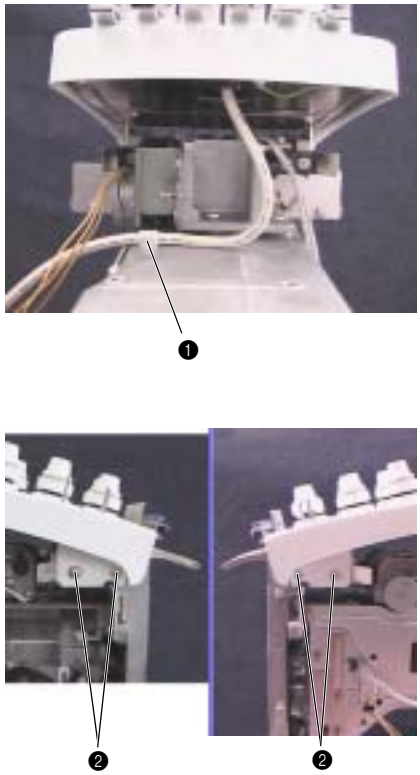

www.promelectroavtomat.ru

13 Needle plate removal

1. Remove the 2 screws ❶, and then remove the needle plate ①.

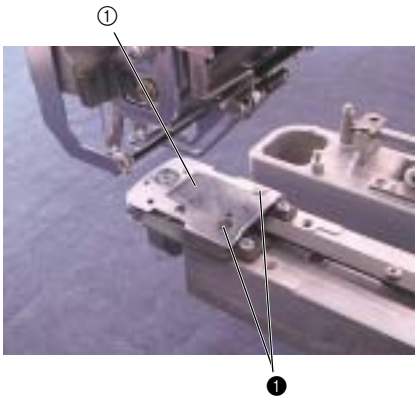

14 Needle plate base assembly removal

1. Remove the 2 screws ❶ to disconnect the cutter link assembly ①.
2. Remove the 2 screws ❷, and then remove the needle plate base assembly.

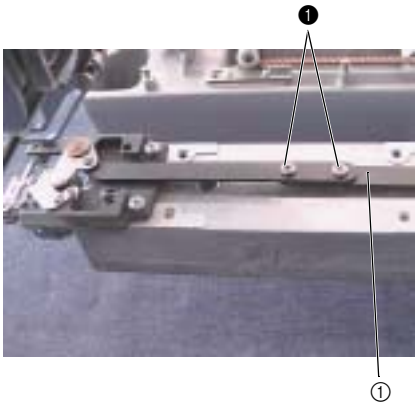

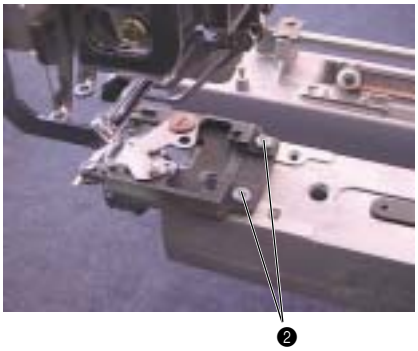

15 Needle plate base disassembly

1. Remove the screws ❶, ❷, and then remove the rotary hook stopper.
2. Remove the screw ❸, and then remove the movable knife and the movable knife collar.

   ***Caution**
   - If there's a WASHER U under the movable knife collar, remove it too.
3. Remove the screw ❹, and then remove the fixed knife.
4. Remove the screw ❺, and then remove the thread holding plate.

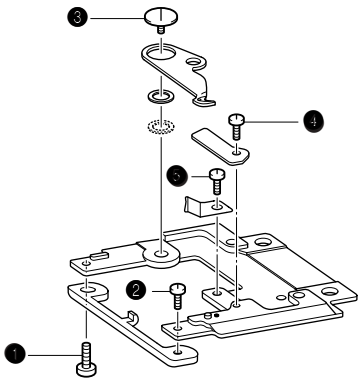

www.promelectroavtomat.ru

16 Picker bracket removal

1. Remove the retaining ring E2, and then remove the picker link.
2. Remove the 2 screws ❶, and then remove the picker bracket final assembly.

Start movie clip (CD-ROM version only)

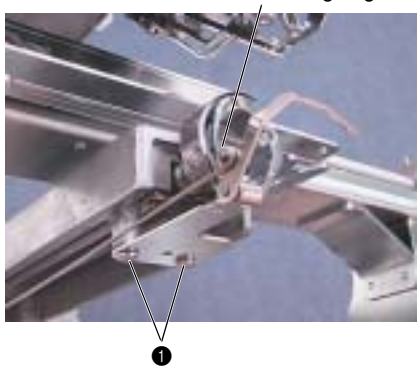

17 Picker bracket disassembly

1. Remove the retaining ring E2, and then remove the picker assembly and the spring S54 .
2. Remove the screw ❶, and then remove the picker holder ① from the picker bracket.

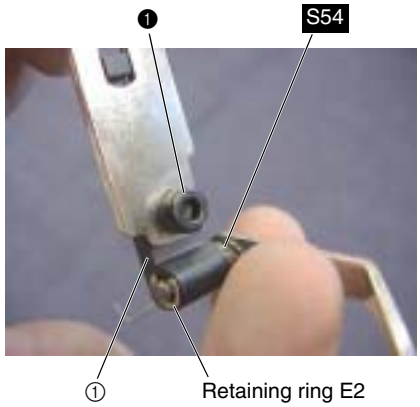

18 Rotary hook removal

1. Remove the 3 screws ❶, and then remove the rotary hook ① from the lower shaft.

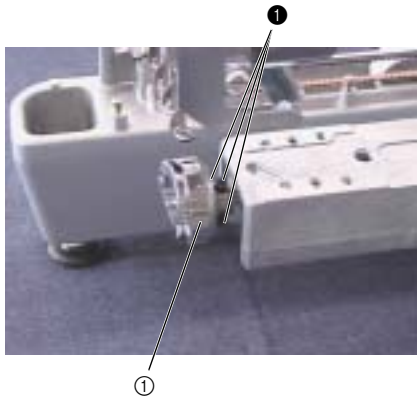

www.promelectroavtomat.ru

19 Cutter unit final assembly and picker final assembly removal

1. Remove the screw ❶, and then remove the cord clamp NK-5N and the lead wire from the arm bed.
2. Remove the 2 screws ❷, and then remove the picker final assembly.

   ***Key point**
   - Fully draw the feed final assembly toward you before removing the cutter unit final assembly and the picker final assembly.
   - Be careful not to bend the picker link.
3. Remove the 2 screws ❸, and then remove the cutter unit assembly.

Start movie clip (CD-ROM version only)

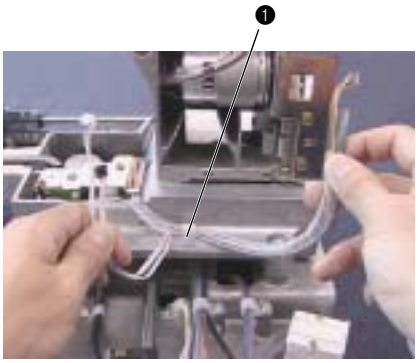

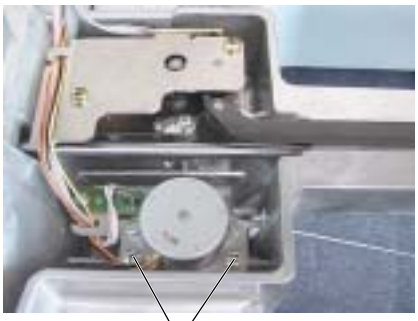

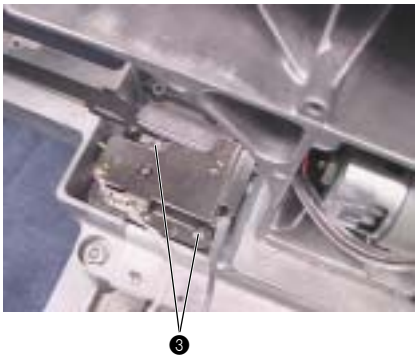

www.promelectroavtomat.ru

Feed unit

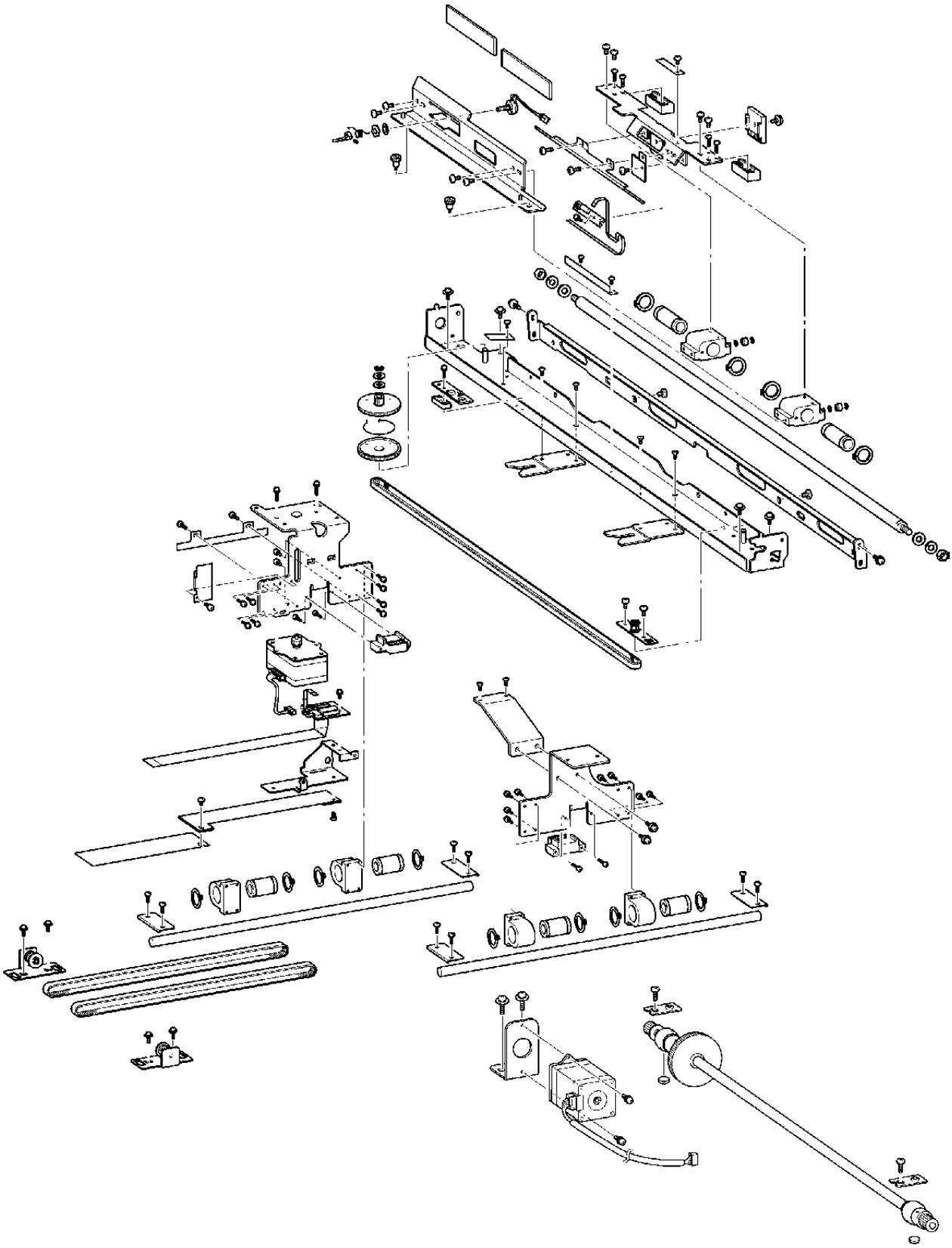

www.promelectroavtomat.ru

1 T-belt (Y-guide) removal

1. Remove the 2 screws ❶, and then remove the Y-belt presser ① (one each on left and right).
2. Remove the 2 screws ❷, and then remove the Y-tension plate assembly ② and T-belt (one each on left and right)
3. Remove the retaining ring E4, and then remove the Y-tension pulley and the washer 7 X 2 from the Y-tension plate assembly.

Start movie clip (CD-ROM version only)

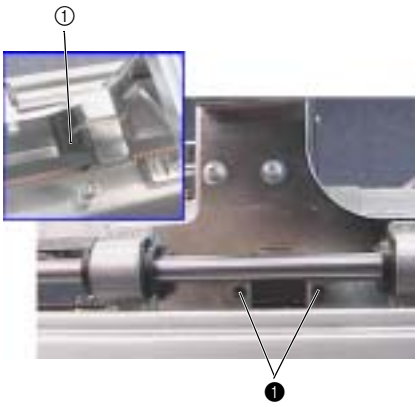

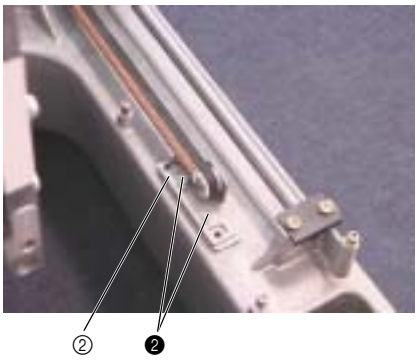

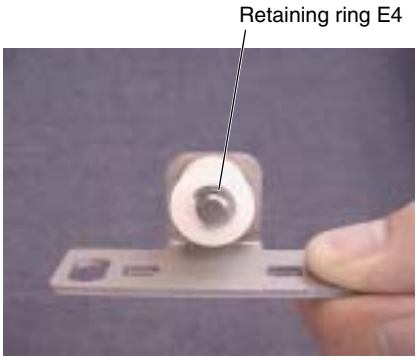

www.promelectroavtomat.ru

2 Feed final assembly removal

1. Draw the feed final assembly toward you.
2. Unlock the connector of the Y-area sensor assembly, and then remove the FFC SML2CD-Y ① from the Y-area sensor assembly.
3. Remove the screw ❶, and then remove the sheet and sheet B.
4. Remove the 4 screws ❷, and then remove the 2 fixed Y-shaft plates (one each on left and right)..
5. Remove the feed final assembly and the 2 Y-guide shafts ②.

Start movie clip (CD-ROM version only)

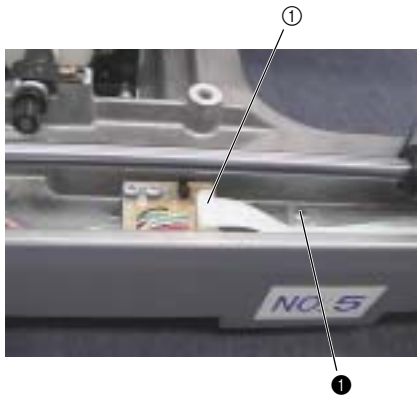

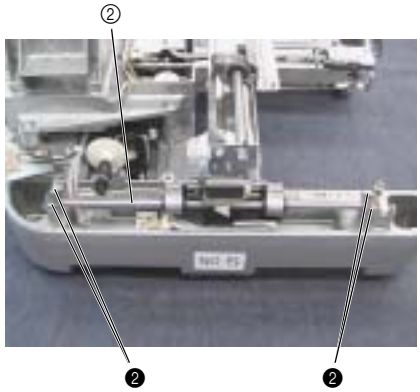

www.promelectroavtomat.ru

3 Y-motor final assembly removal

1. Remove the screw ❶, and then remove the cord clamp NK-4N and the Y-motor assembly's lead wire from the base frame.
2. Remove the 2 screws ❷, and then remove the Y-motor final assembly.

4 Y-motor disassembly

1. Remove the 2 screws ❶, and then remove the Y-motor assembly from the Y-motor stay.

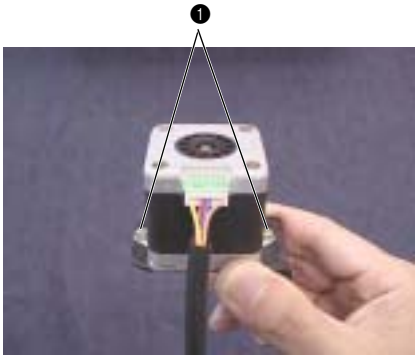

www.promelectroavtomat.ru

5 Y-driving shaft assembly removal

1. Remove the 2 screws ❶, and then remove the 2 bushing pressers A.
2. Remove the Y-driving shaft assembly ①.
3. Remove the 2 felts ②.

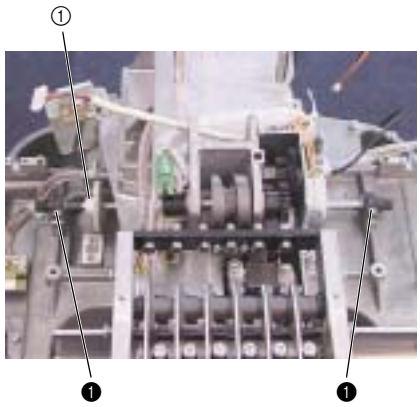

6 Cord grip removal

1. Remove the screw ❶, and then remove the cord grip.
2. Disconnect the X-feed motor's lead wire from the connect PCB ①.
3. Unlock the connect PCB's connector ②, and then disconnect the FFC (SML2CD-C) from the connect PCB.

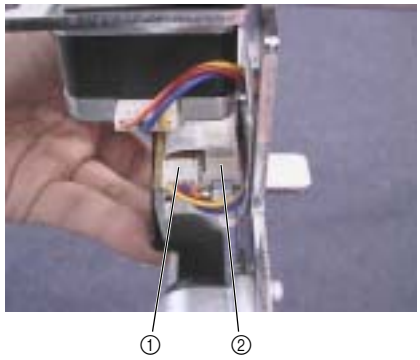

www.promelectroavtomat.ru

7 FFC and X-area sensor assembly removal

1. Remove the screw ❶, and then remove the sheet.
2. Remove the 2 screws ❷, and then remove the sheet.
3. Remove the screw ❸, and then remove the X-area sensor assembly and the X-frame spacer.
4. Unlock the X-area sensor assembly's 2 connectors ①, and then disconnect the 2 FFCs, (SML2CD-C) and (SML2CD-X), from the X-area sensor assembly.

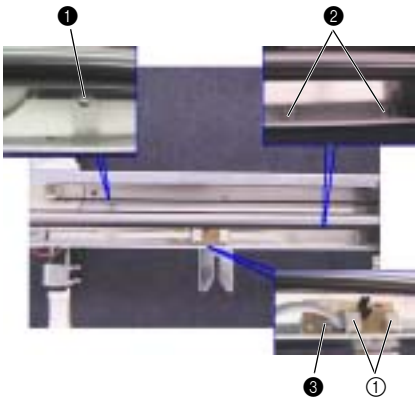

8 Y-frame spacer and X-belt presser removal

1. Remove the screw ❶, and then remove the X-belt presser.
2. Remove the 4 screws ❷, and then remove the 2 Y-frame spacers.

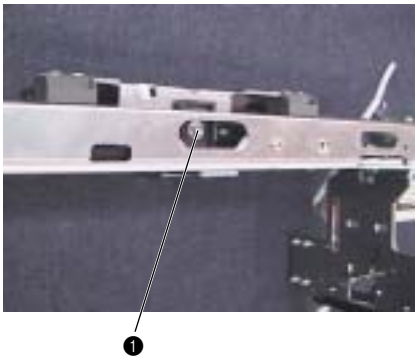

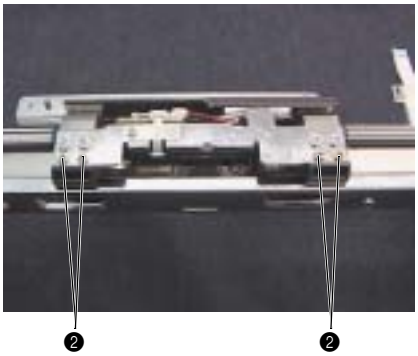

9 X-feed frame B removal

1. Remove the 4 screws (❶❷, 2 each), and then remove the X-feed frame B from the feed frame assembly.

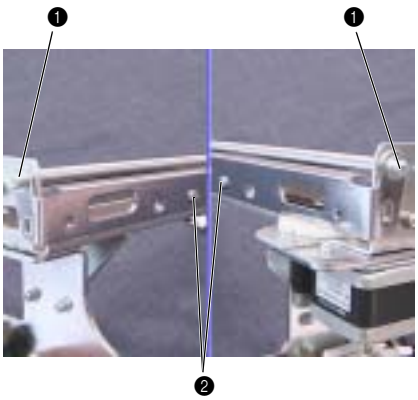

www.promelectroavtomat.ru

10 X-carriage A assembly and X-carriage B assembly removal

1. Remove the 4 screws ❶, and then remove the hoop sensor assembly's lead wire connector ① from the hoop PCB assembly while removing the X-carriage A assembly.
2. Unlock the hoop PCB assembly's FFC (SML2CD-X) connector ②.
3. Disconnect the FFC (SML2CD-X) from the hoop PCB assembly, and then remove the screw ❷ and the sheet.
4. Remove the screw ❸, and then remove the hoop PCB assembly.
5. Remove the 4 screws ❹, and then remove the X-carriage B assembly.

Start movie clip (CD-ROM version only)

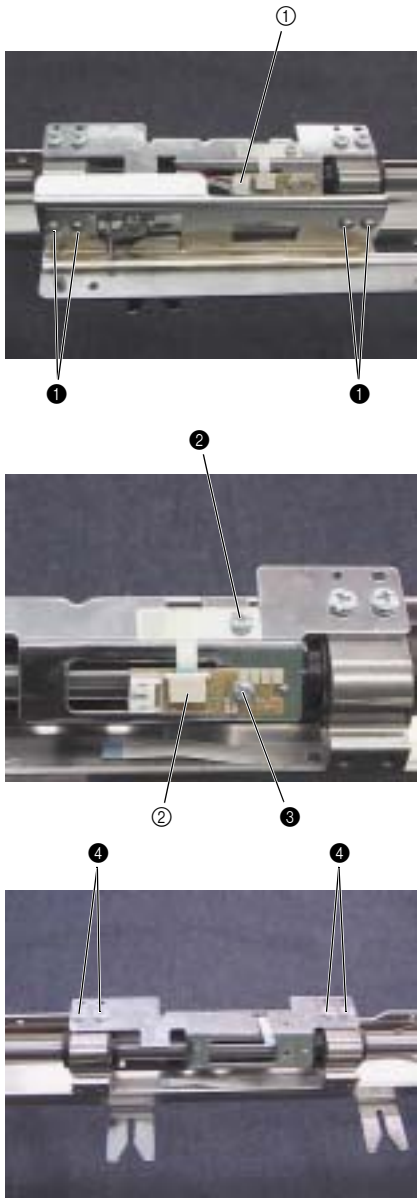

11 X-sensor dog removal

1. Remove the screw ❶, and then remove the sheet and disconnect the FFC (SML2CD-X).
2. Remove the 2 screws ❷, and then remove the X-sensor dog.

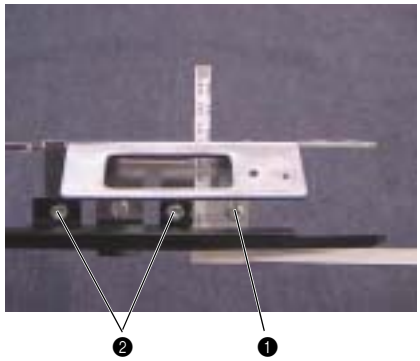

www.promelectroavtomat.ru

12 Hoop sensor removal

1. Remove the screw ❶.
2. Remove the screw ❷, and then remove the hoop lever.
3. Remove the nut ① and the plain washer S6, and then remove the hoop sensor assembly and the spring S44 .

Start movie clip (CD-ROM version only)

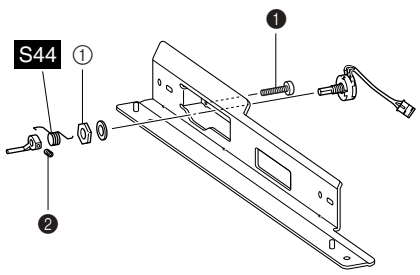

13 X-guide shaft removal

1. Remove the 2 nuts (2, M6) ① on both ends of the X-guide shaft, 2 plain washers (6) ②, and 2 spring washers (2-6) ③. Then remove the X-guide shaft and the 2 bearing case X assemblies from the feed frame assembly.
2. Remove the retaining ring E4, and then remove the X-roller from the bearing case X assembly (2 sets).
3. Remove the 2 external retaining rings C21, and then remove the linear bearing (12) from the bearing case X assembly (2 sets).

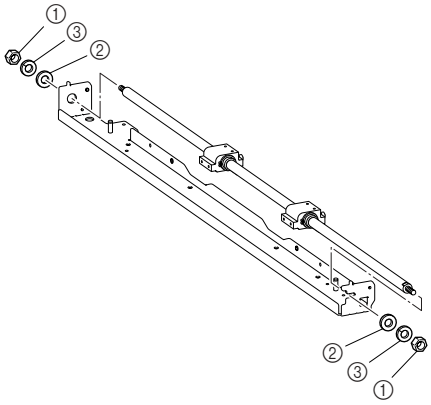

Retaining ring E4

External retaining rings C21

Disassembly

www.promelectroavtomat.ru

14 T-belt (Y-drive) removal

1. Remove the 2 screws ❶, and then remove the tension pulley plate assembly and the T-belt.

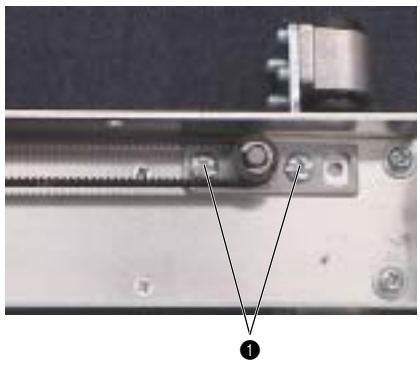

15 Feed frame disassembly

1. Remove the 4 screws (❶ ❷, 2 each), and then remove the Y-carriage RB.
2. Remove the retaining ring E4, plain washer (M6), washer, Y-driving gear pulley A, spring for gear, and Y-driving gear pulley B.
3. Remove the 4 screws ❸, and then remove the Y-carriage R assembly and the Y-carriage L assembly.
4. Remove the 4 screws ❹, and then remove the 2 cap connections.

Start movie clip (CD-ROM version only)

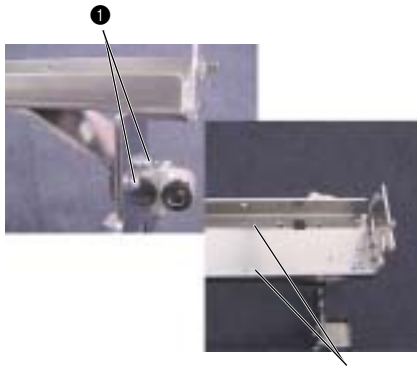

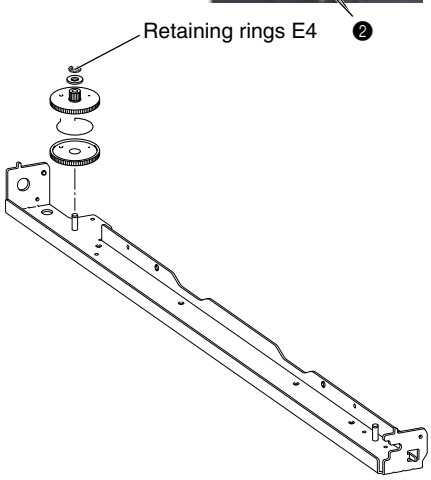

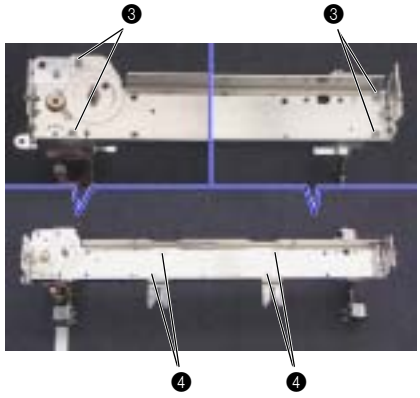

www.promelectroavtomat.ru

16 Y-carriage L disassembly

1. Remove the 2 screws ❶, and then remove the connect PCB final assembly.
2. Remove the 2 screws ❷, and then remove the Y-sensor dog.
3. Remove the 2 screws ❸, and then remove the X-motor assembly.
4. Remove the 4 screws ❹, and then remove the bearing case Y assembly (2 sets).
5. Remove the 2 external retaining rings C19, and then remove the linear bearing (10) from the bearing case Y assembly (2 sets).

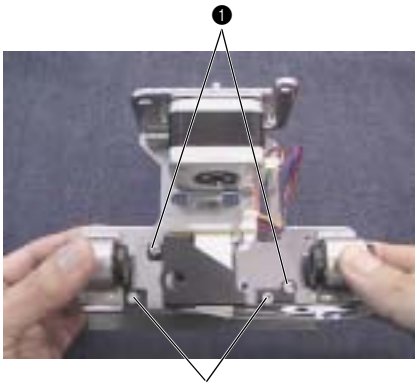

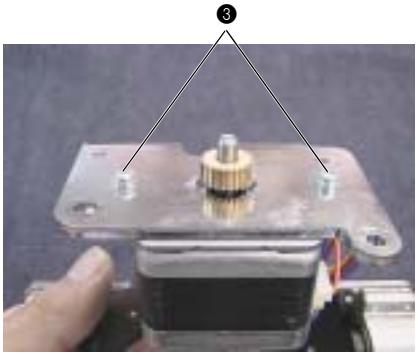

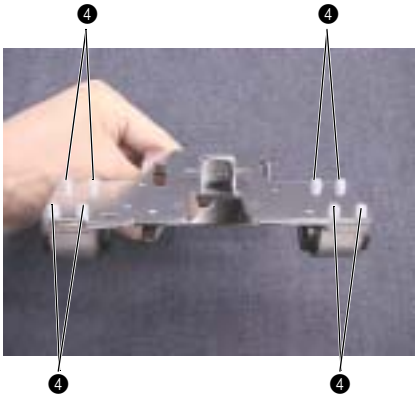

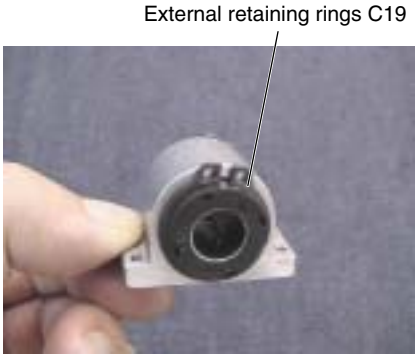

www.promelectroavtomat.ru

17 Y-carriage R disassembly

1. Remove the 4 screws ❶, and then remove bearing case Y from the Y-carriage R (2 locations).
2. Remove the 2 external retaining rings C19, and then remove the linear bearing (10) from the bearing case Y assembly (2 sets).

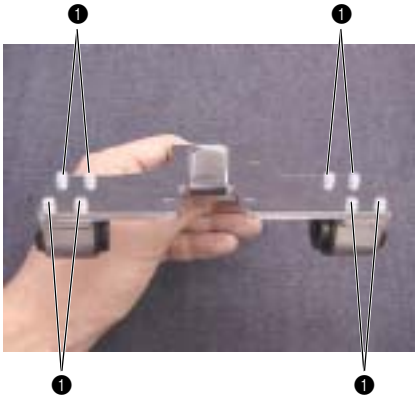

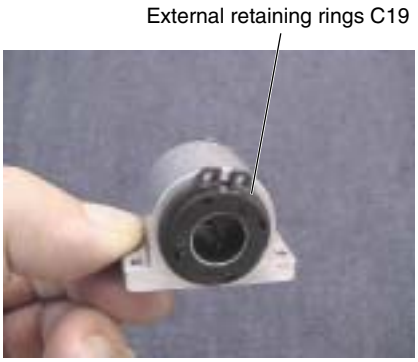

18 Connect PCB disassembly

1. Unlock the connect PCB assembly's connector, and then disconnect the FFC (SML2CD-Y) ① from the
2. Remove the screw ❶, and then remove the connect PCB from the PCB holder.
3. Remove the screw ❶, and then remove the FFC (SML2CD-Y) and the sheet from the PCB holder.

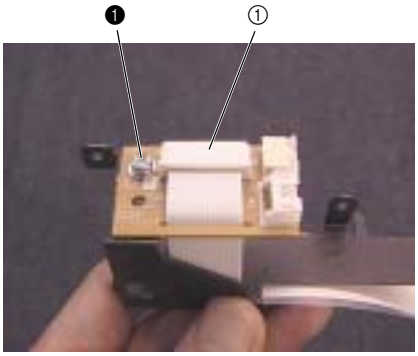

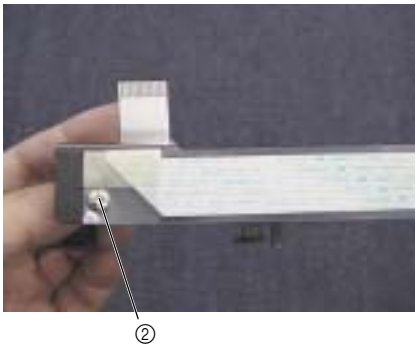

www.promelectroavtomat.ru

Needle thread unit

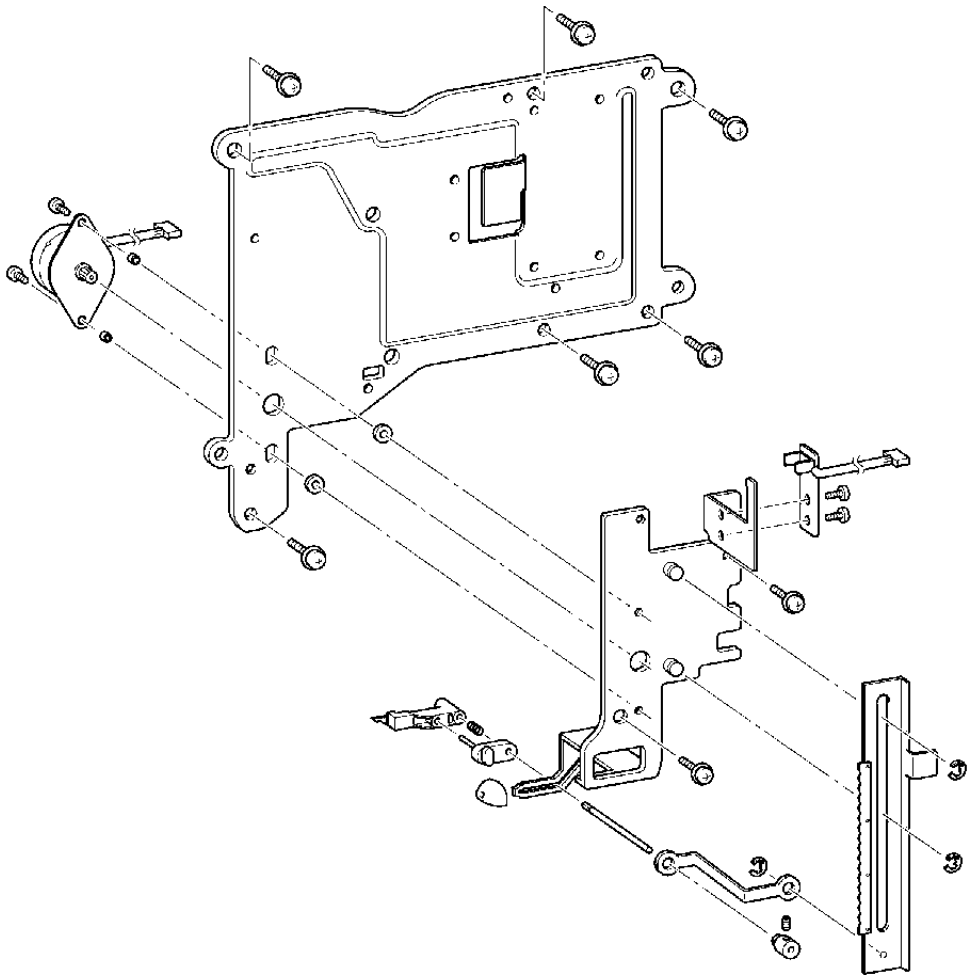

www.promelectroavtomat.ru

1 Needle thread assembly removal

1. Remove the 6 screws ❶, and then remove the needle thread assembly ①.

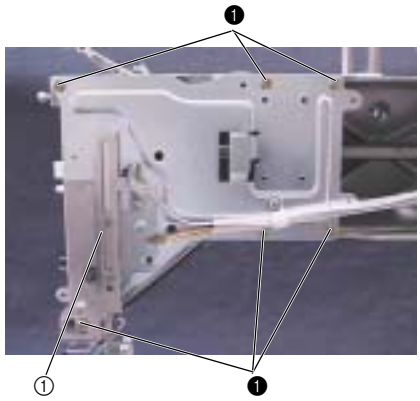

2 Hook holder assembly removal

1. Remove the cap ①.
2. Remove the hook holder assembly ②, and then remove the spring S56 and the hook holder axis B assembly.

   ***Key point**
   - The hook holder assembly's tab is engaged in the groove on the hook holder axis B.
3. Remove the set collar assembly.
4. Remove the screw ❶ from the hook holder axis B, and then remove the bush.

Start movie clip (CD-ROM version only)

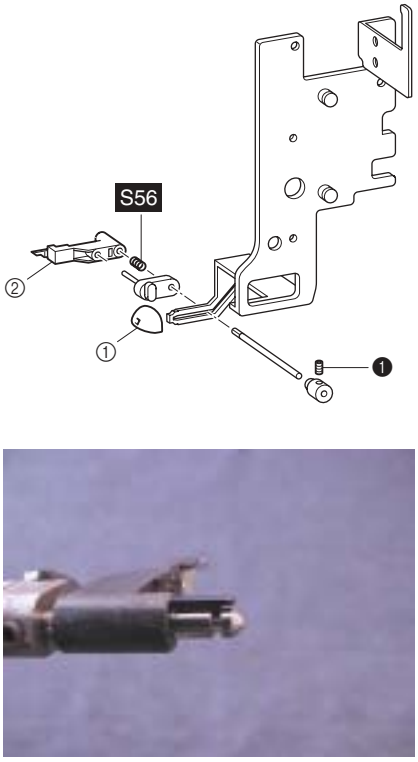

www.promelectroavtomat.ru

3 Rack and hook holder link removal

1. Remove the 2 screws ❶, and then remove the needle thread sensor assembly.
2. Remove the 2 retaining rings E4, and then remove the rack assembly.
3. Remove the retaining ring E3, and then remove the hook holder link from the rack assembly.

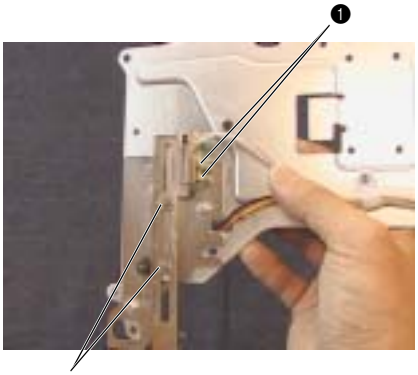

Retaining ring E4

Retaining ring E3

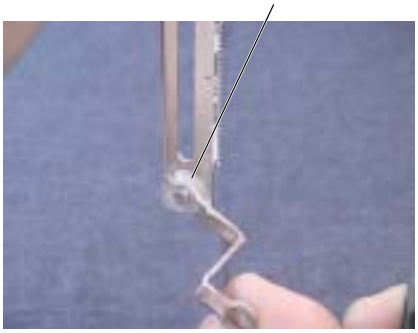

www.promelectroavtomat.ru

4 Thread motor assembly removal

1. Remove the 2 screws ❶, and then remove the thread motor assembly and the 2 spacers.
2. Remove the 2 screws ❷, and then remove the base plate assembly from the thread guide base.
3. Remove the screw ❸, and then remove the damper spring holder lower from the thread guide base.

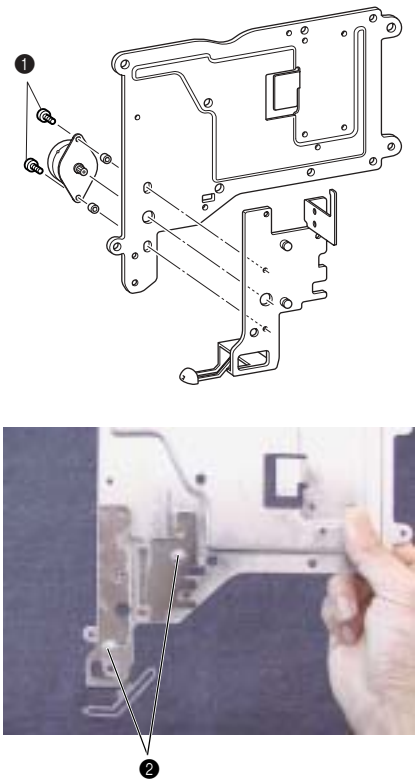

www.promelectroavtomat.ru

Needle bar change unit

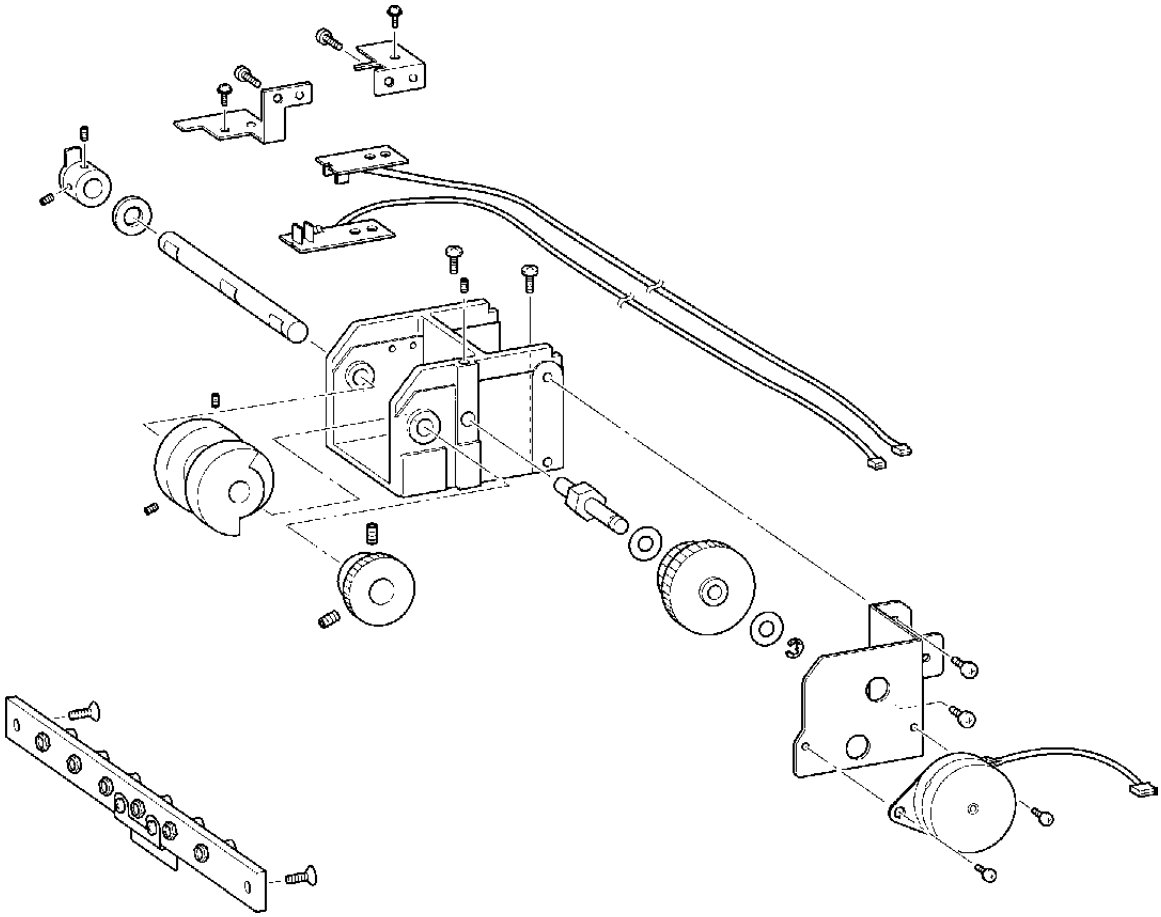

www.promelectroavtomat.ru

1 Change box removal

1. Remove the 2 screws ❶, and then remove the change box assembly ①.

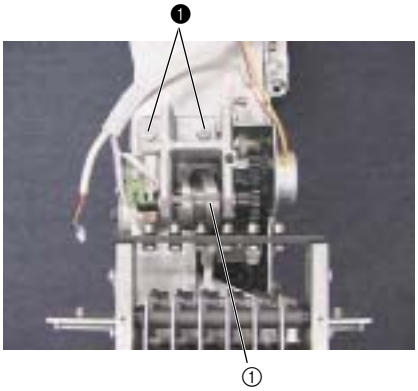

2 Change box disassembly (Step 1)

1. Remove the 2 screws ❶, and then remove the C sensor bracket assembly and the C sensor bracket assy lower.
2. Remove the 2 screws ❷, and then remove the color change sensor assembly and the index sensor assembly from the C sensor bracket assembly and the C sensor bracket assy lower.
3. Remove the 2 screws ❸, and then remove the change motor base assembly.
4. Remove the 2 screws ❹, and then remove the index sensor assembly from the change motor base.

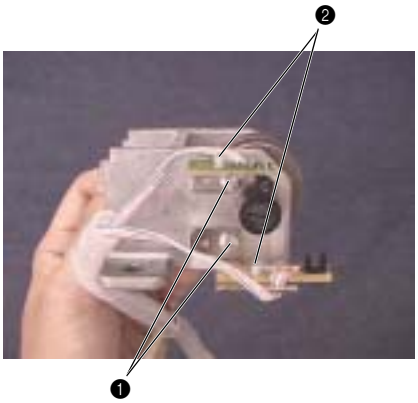

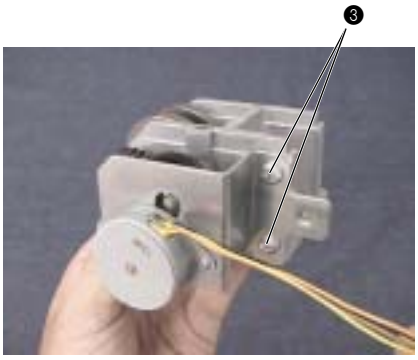

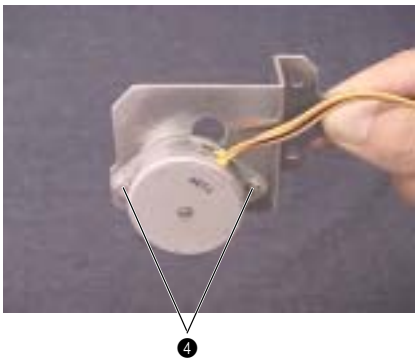

www.promelectroavtomat.ru

3 Change box disassembly (Step 2)

1. Remove the screw ❶, and then remove the differential gear shaft assembly.
2. Remove the retaining ring E4, and then remove the plain washer (M6), C differential gear, and second plain washer (M6) from the differential gear shaft.
3. Remove the 2 screws ❷, and then remove the change gear.
4. Remove the 2 screws ❸, and then remove the change camshaft assembly, thrust washer, and change cam.
5. Remove the 2 screws ❹, and then remove the C stop position dog from the change camshaft.

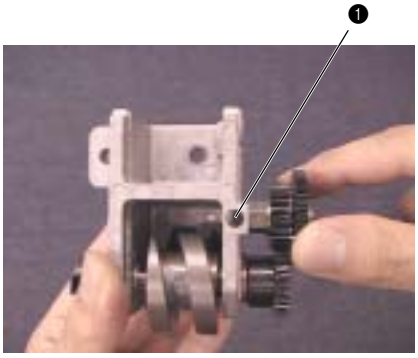

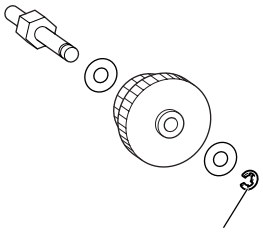

Disassembly

www.promelectroavtomat.ru

Thread wiper unit

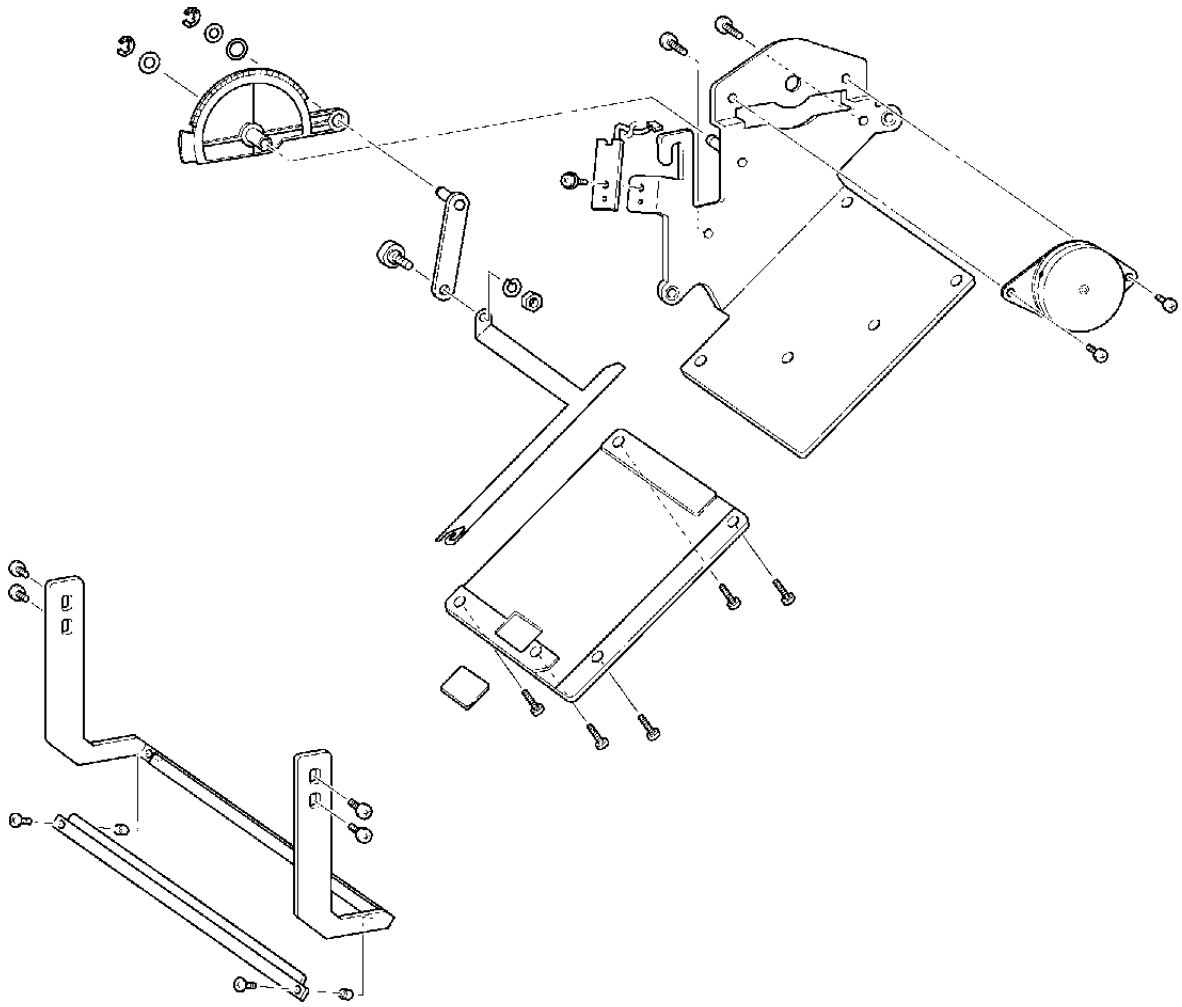

www.promelectroavtomat.ru

1 Thread presser base removal

1. Remove the 4 screws ❶, and then remove the thread presser base assembly ① from the needle bar case final assembly.

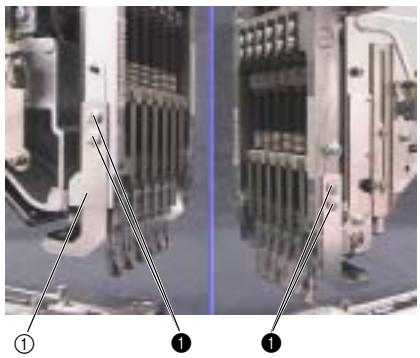

2 Thread presser base disassembly

1. Remove the 2 screws ❶, and then remove the thread presser cover assembly and the 2 thread presser spacers from the thread presser base assembly.

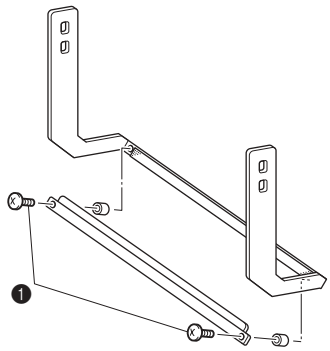

3 Wiper set assembly removal

1. Remove the screw ❶, and then remove the cord clamp NK-5N.
2. Remove the 2 screws ❷, and then remove the wiper set assembly.

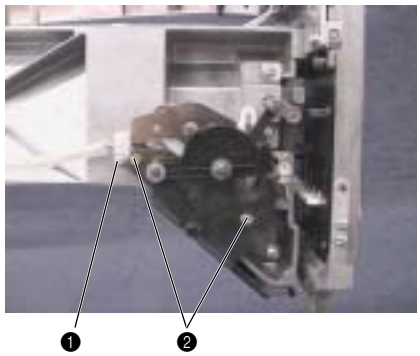

www.promelectroavtomat.ru

4 Wiper guide and wiper sensor removal

1. Remove the screw ❶, and then remove the wiper sensor assembly.
2. Remove the 6 screws ❷, and then remove the wiper guide assembly.
3. Remove the wiper cushion ① from the wiper guide assembly.

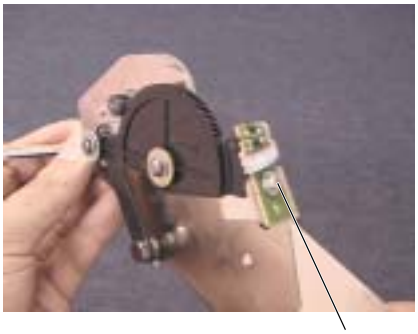

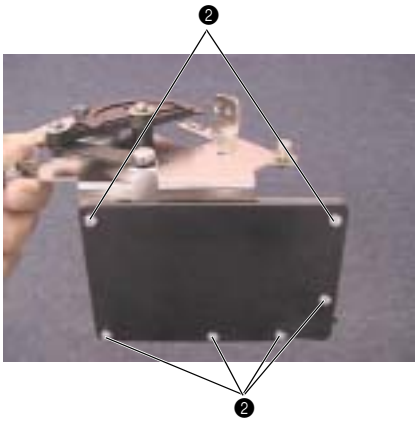

www.promelectroavtomat.ru

5 Wiper set disassembly

1. Remove the nut (3, M4), spring washer (2-4), and wiper shoulder screw, and then remove the wiper hook ①.
2. Remove the retaining ring E4, plain washer (M6), and washer, and then remove the wiper lever assembly.
3. Remove the retaining ring E4 and plain washer (M5), and then remove the wiper link assembly from the wiper lever.
4. Remove the 2 screws ❶, and then remove the wiper motor assembly.

Start movie clip (CD-ROM version only)

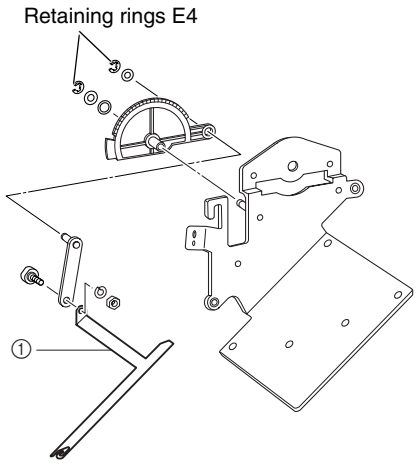

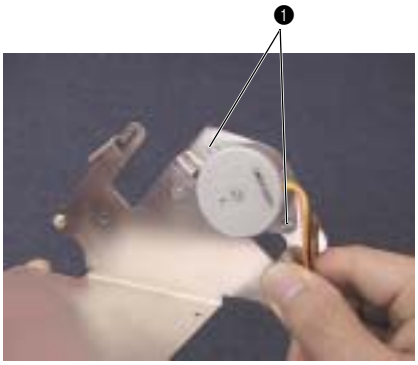

www.promelectroavtomat.ru

Needle bar unit

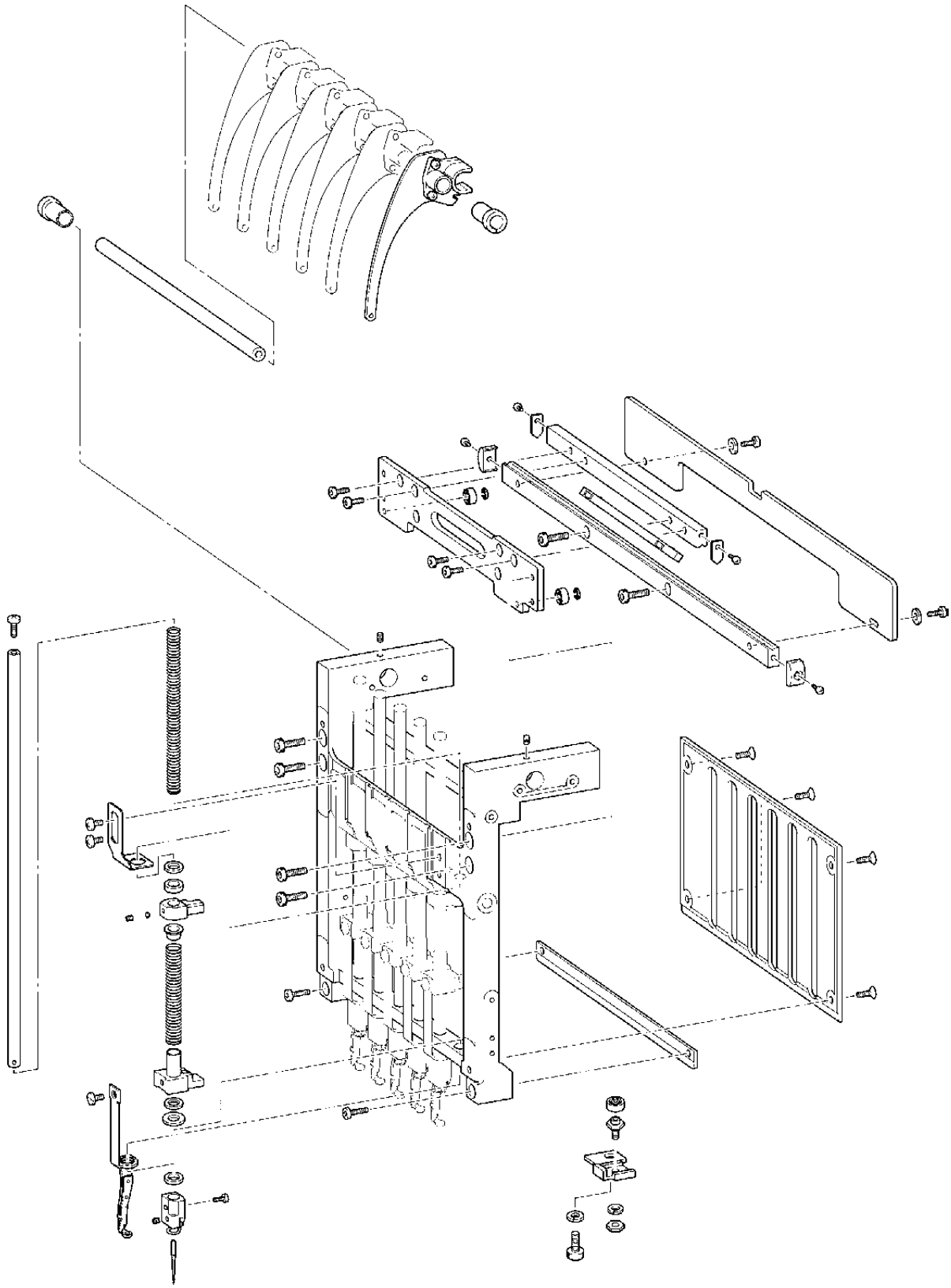

www.promelectroavtomat.ru

1 Needle bar case final assembly removal

1. Remove the 4 screws ❶, and then remove the needle bar case assembly.

Start movie clip (CD-ROM version only)

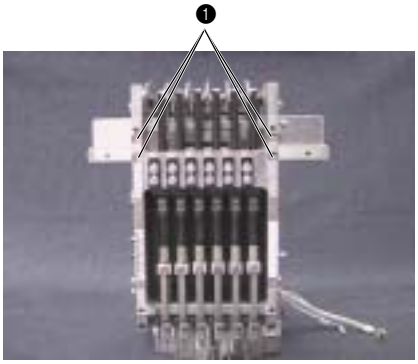

2 Change roller base assembly removal

1. Remove the 2 screws ❶, and then remove the change roller base assembly.

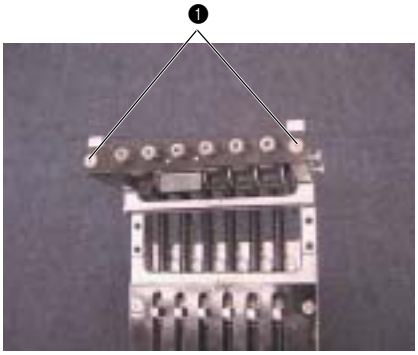

3 Case guide D removal

1. Remove the 2 screws ❶, and then remove the case guide D.

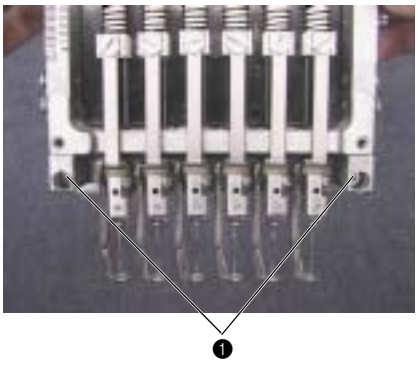

www.promelectroavtomat.ru

4 Thread take-up lever assembly removal

1. Remove the 2 screws ❶, and then remove the thread take-up shaft ① and the 6 thread take-up lever assemblies ②.
2. Remove the 2 thread take-up bushes ③.

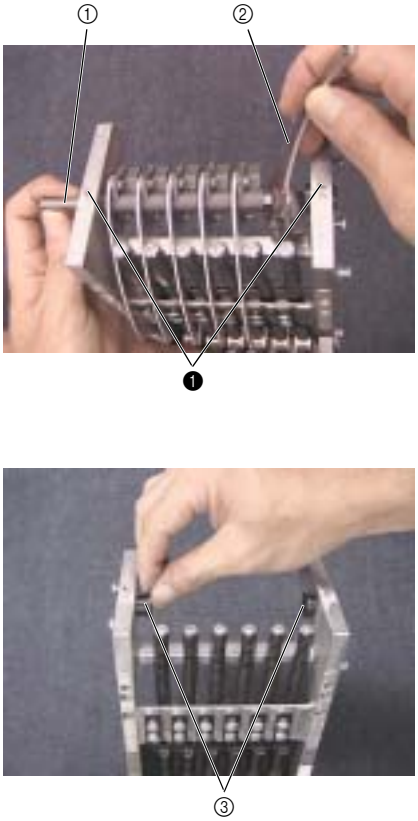

5 Thread take-up lever disassembly

1. Remove the 2 screws ❶, and then remove the thread take-up boss from the thread take-up lever. (6 sets)

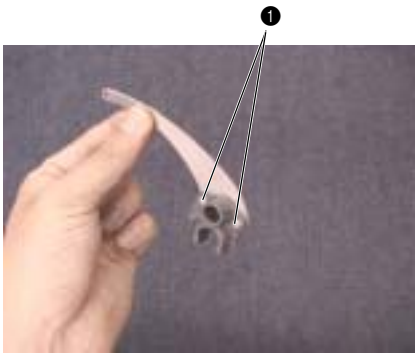

www.promelectroavtomat.ru

6 Needle bar removal

1. Remove the screw ❶ and the washer. (6 locations)
2. Remove the screw ❷. (6 locations)
3. Remove the screw ❶, and then remove the thread guide ①, needle bar thread guide ②, presser foot cushion ③, presser foot assembly ④, and felt ⑤.
4. Remove the felt (S, hard) ⑥, presser foot clamp ⑦, spring S48 , presser foot spring collar ⑧, needle bar clamp ⑨, cushion rubber ⑩, washer ⑪, and spring S47 while pulling the needle bar upward. (6 locations).
5. Remove the screw ❹ from the needle bar. (6 sets)

Start movie clip (CD-ROM version only)

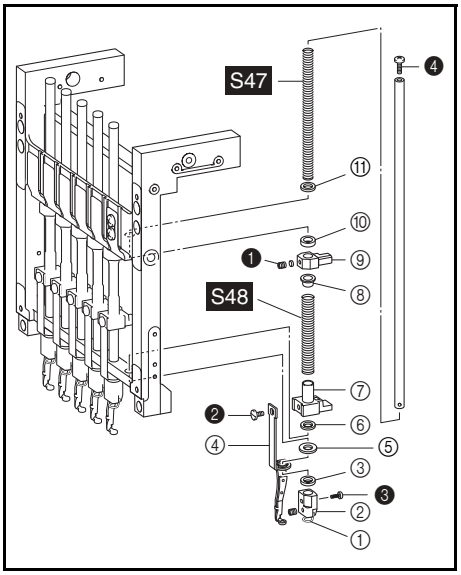

7 Needle bar case disassembly

1. Remove the 2 screws ❶, and then remove the top dead center plate. (6 locations)
2. Remove the 4 screws ❷, and then remove the needle bar guide rail.

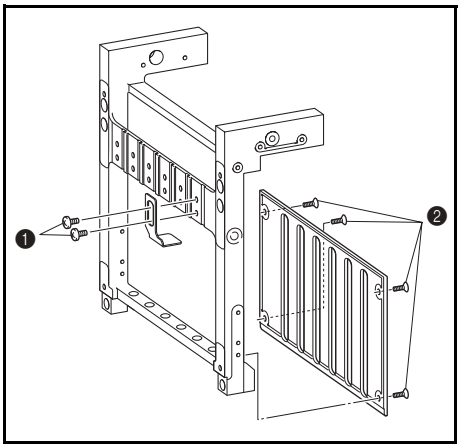

8 Case positioning plate assembly removal

1. Remove the screw ❶ and spring washer (2-5), and then remove the case positioning plate assembly.

www.promelectroavtomat.ru

9 Case positioning plate disassembly

1. Remove the nut (2, M4) ①, spring washer (2-4), and plain washer (M4), and then remove the ball bearing (694) and the case positioning shaft from the case positioning plate.

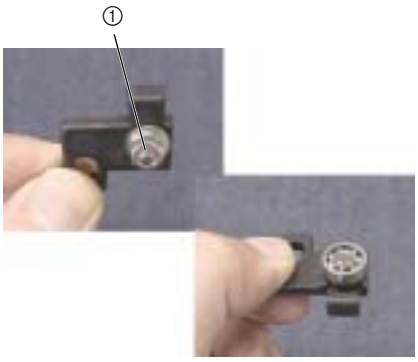

10 Case bracket assembly removal

1. Remove the screw ❶, and then remove the case guide cover UL. (2 locations)
2. Remove the screw ❷, and then remove the slide roller stopper. (2 locations)
3. Remove the case bracket assembly ① and the slide roller ②.
4. Remove the 2 screws ❸, and then remove the case guide UL assembly ③.

Start movie clip (CD-ROM version only)

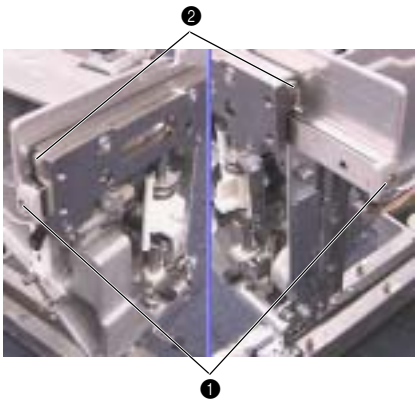

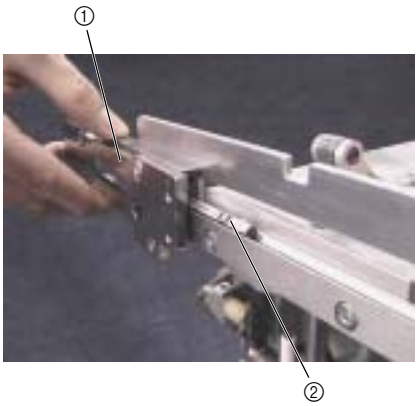

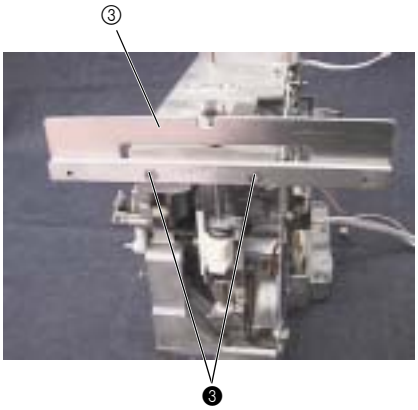

www.promelectroavtomat.ru

11 Case bracket disassembly

1. Remove the 4 screws ❶, and then remove the case guide US and the case bracket assembly.
2. Remove the 2 retaining rings E3, and then remove the 2 ball bearings (694) from the case bracket assembly.

Start movie clip (CD-ROM version only)

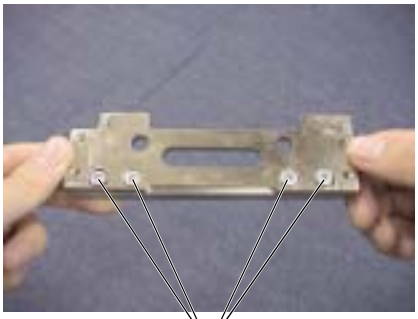

12 Case guide UL disassembly

1. Remove the 2 screws ❶, and then remove the case guide UL ① and the thread take-up guide.

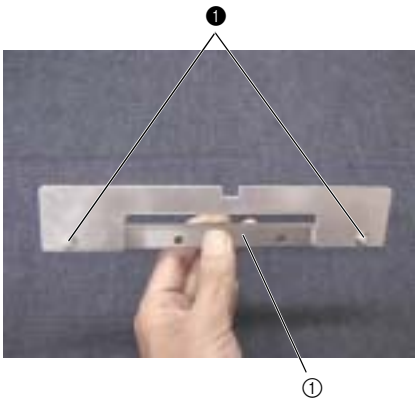

www.promelectroavtomat.ru

Upper shaft unit

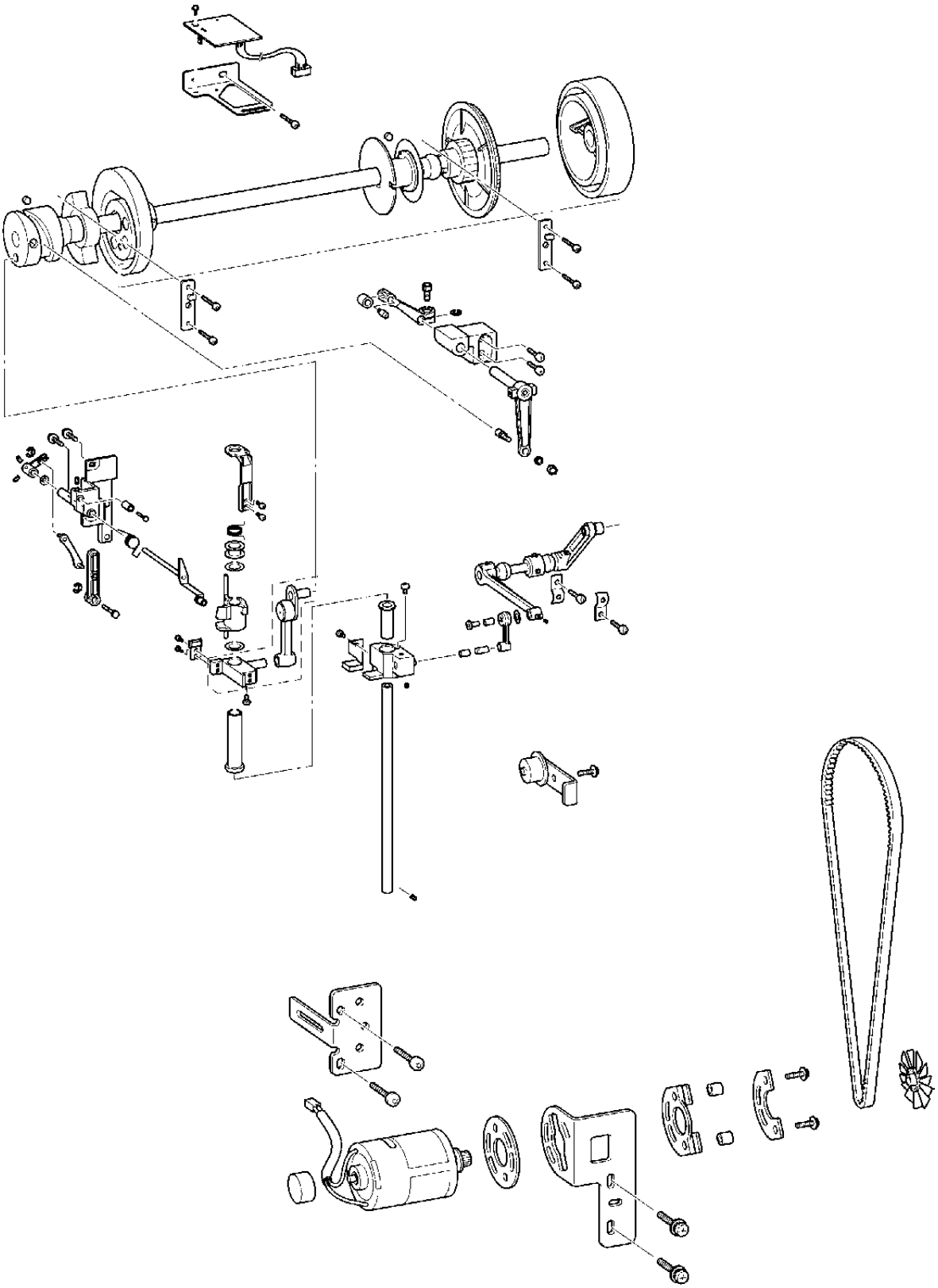

www.promelectroavtomat.ru

1 Main motor final assembly removal

1. Remove the 2 screws ❶, and then remove the main motor final assembly and the T-belt (XA9644-050).
2. Remove the motor fan from the main motor final assembly.
3. Remove the 2 screws ❷, and then remove the tension pulley final assembly.
4. Remove the screw ❸, and then remove the tension pulley assembly.

2 Main motor disassembly

1. Remove the 2 screws ❶, and then remove the main motor assembly, motor holder spacer, and motor spacer presser from the motor holder.
2. Remove the fender rubber ① from the motor holder.
3. Remove the 2 spacers (4 x 7) ② from the fender rubber.
4. Remove the motor cap ③ from the main motor assembly.

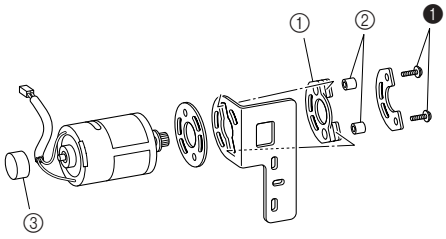

www.promelectroavtomat.ru

3 Driving jump assembly removal

1. Remove the 2 screws ❶, and then remove the driving jump assembly.

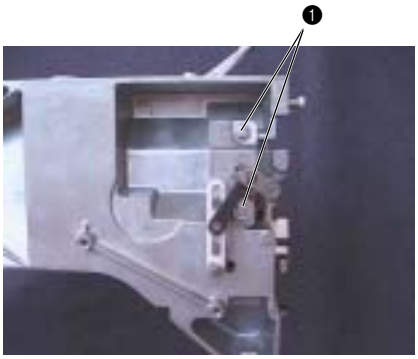

www.promelectroavtomat.ru

4 Driving jump disassembly

1. Remove the 2 screws ❶, and then remove the J differential lever ①, thrust washer, and J slide lever assembly ②.
2. Remove the retaining ring E4, and then remove the J slide lever shaft ③ from the J slide lever.
3. Remove the retaining ring E4, and then remove the J differential lever ④ from the J link assembly.
4. Remove the J driving lever ⑤ and the spring S46 from the J base assembly.
5. Remove the screws ❷, and then remove the J cushion pin and the J cushion.

Start movie clip (CD-ROM version only)

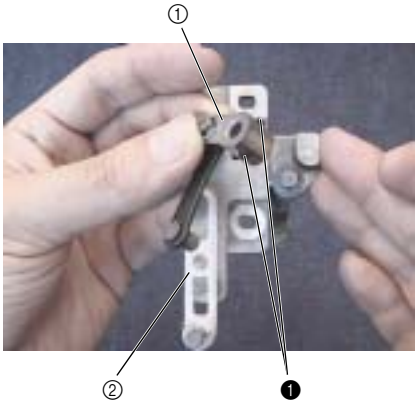

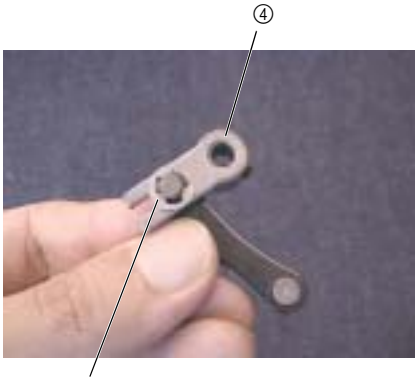

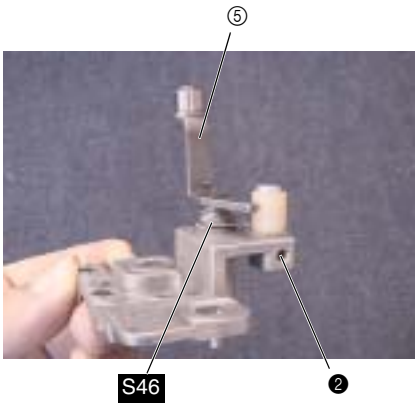

Disassembly

www.promelectroavtomat.ru

5 Base needle bar removal

1. Remove the screw ❶, and then remove the J-clamp final assembly ② and the presser foot vertical base assembly ③ while pulling the base needle bar ① upward.

Start movie clip (CD-ROM version only)

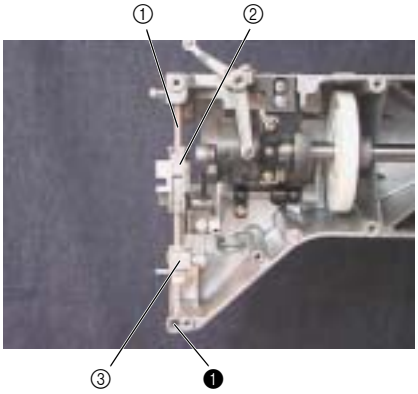

6 J-clamp disassembly

1. Remove the 2 screws ❶, and then remove the J-clamp.
2. Remove the J-spring collar and the spring S45 .
3. Remove the thrust washer, jump bracket ①, and thrust washer.
4. Remove the screw ❷, and then remove the J vertical bush ② from the J bracket assembly.
5. Remove the 2 screws ❸, and then remove the J cushion base.

Start movie clip (CD-ROM version only)

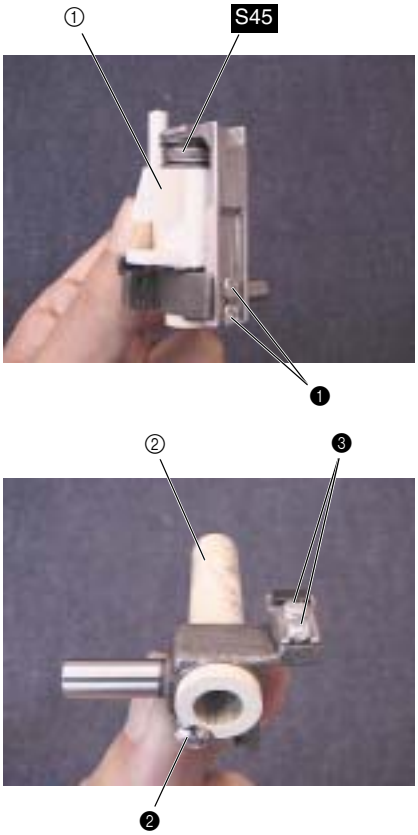

www.promelectroavtomat.ru

7 Presser foot vertical base disassembly

1. Remove the screw ❶, and then remove the presser foot vertical pin ①.
2. Remove the screw ❷, and then remove the presser foot vertical bush ②.
3. Remove the screw ❸, and then remove the presser foot cushion base ③.

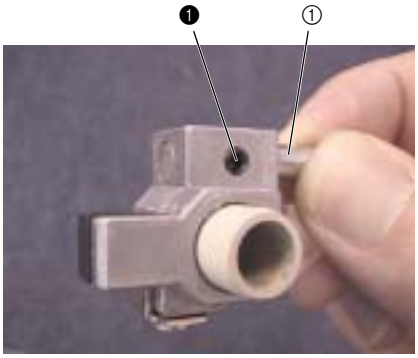

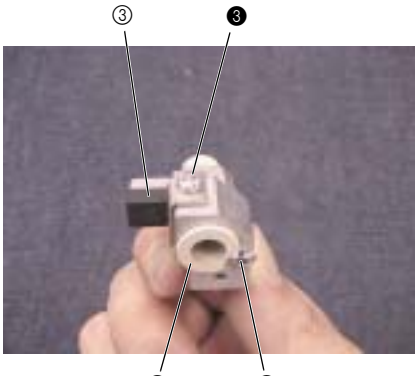

8 Thread take-up driving lever final assembly removal

1. Remove the 2 screws ❶, and then remove the thread take-up driving lever final assembly.

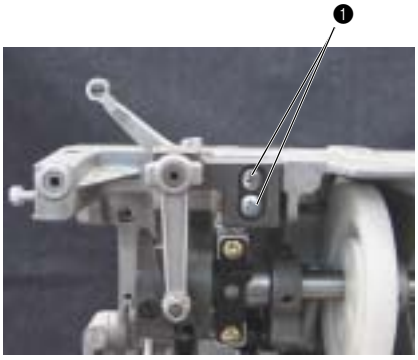

www.promelectroavtomat.ru

9 Thread take-up driving lever disassembly

1. Remove the screw ❶, and then remove the thread take-up differential lever ① and the spacer.
2. Remove the thread take-up roller pin ② from the thread take-up differential lever assembly, and then remove the roller.
3. Remove the thread take-up driving lever assembly ③ from the thread take-up bearing.
4. Remove the nut (1, M5) ④ and the spring washer (2-5), and then remove the roller shaft assembly from the thread take-up driving lever assembly.

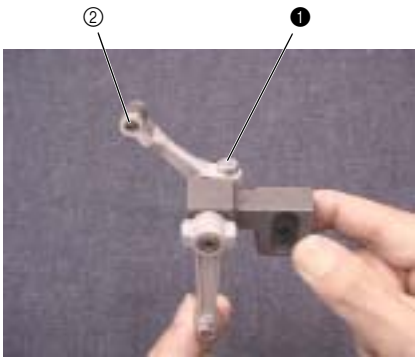

www.promelectroavtomat.ru

10 Main shaft sensor final assembly removal

1. Remove the screw ❶, and then remove the main shaft sensor final assembly.
2. Remove the screw ❷, and then remove the main shaft sensor assembly from the sensor holder.

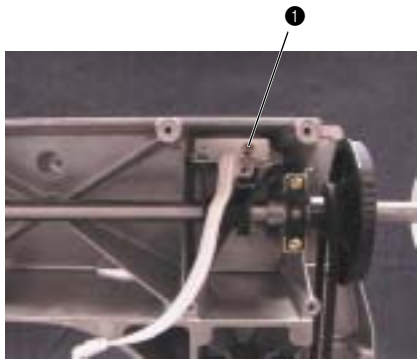

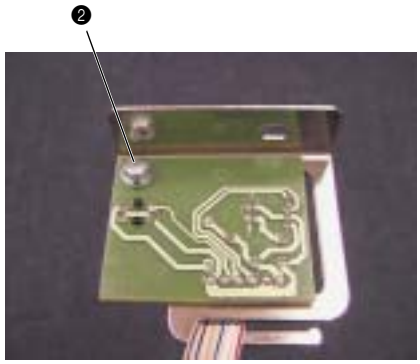

11 Crank rod removal

1. Remove the 2 screws ❶, and then remove the crank rod assembly from the thread take-up cam.

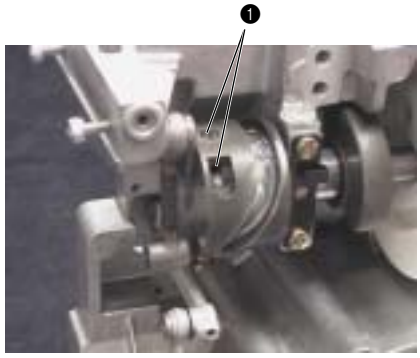

www.promelectroavtomat.ru

12 Pressure foot driving shaft assembly removal

1. Remove the 2 screws ❶, and then remove the 2 bushing pressers.
2. Remove the pressure foot driving shaft assembly ①.
3. Remove the 2 felts ② from the metal collar on the arm bed.

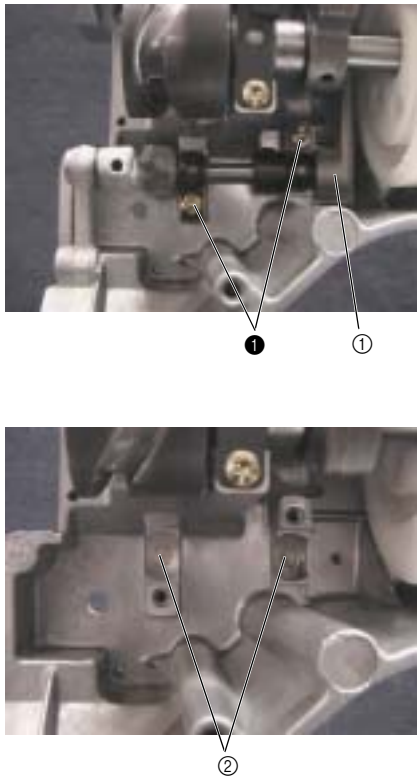

13 Presser foot driving shaft disassembly

1. Remove the screw ❶, and then remove the presser foot lever shaft, presser foot connecting rod ①, and thrust washer from the presser foot differential lever.

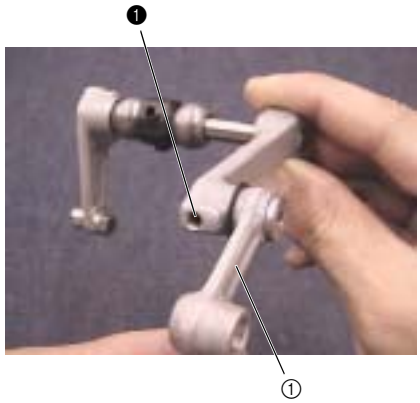

www.promelectroavtomat.ru

14 Upper shaft assembly removal

1. Remove the 4 screws ❶, and then remove the 2 metal pressers.
2. Remove the upper shaft final assembly ①.

   ***Key point**
   - Be careful not to damage the encoder.
3. Remove the 2 felts ② from the metal collar on the arm bed.
4. Remove the pulley from the upper shaft final assembly.

Start movie clip (CD-ROM version only)

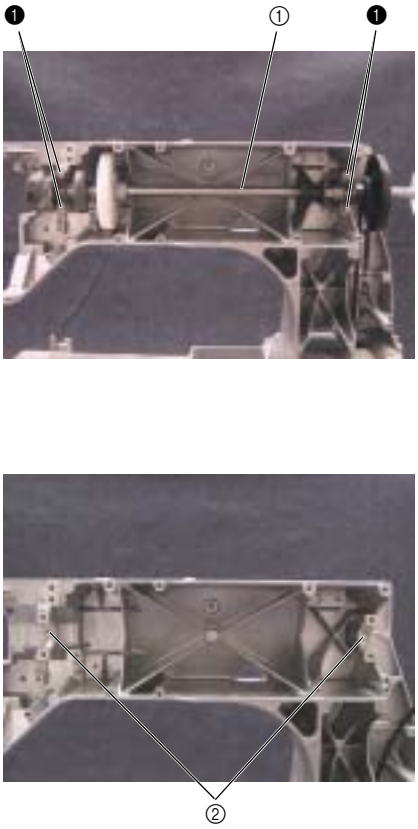

www.promelectroavtomat.ru

Lower shaft unit

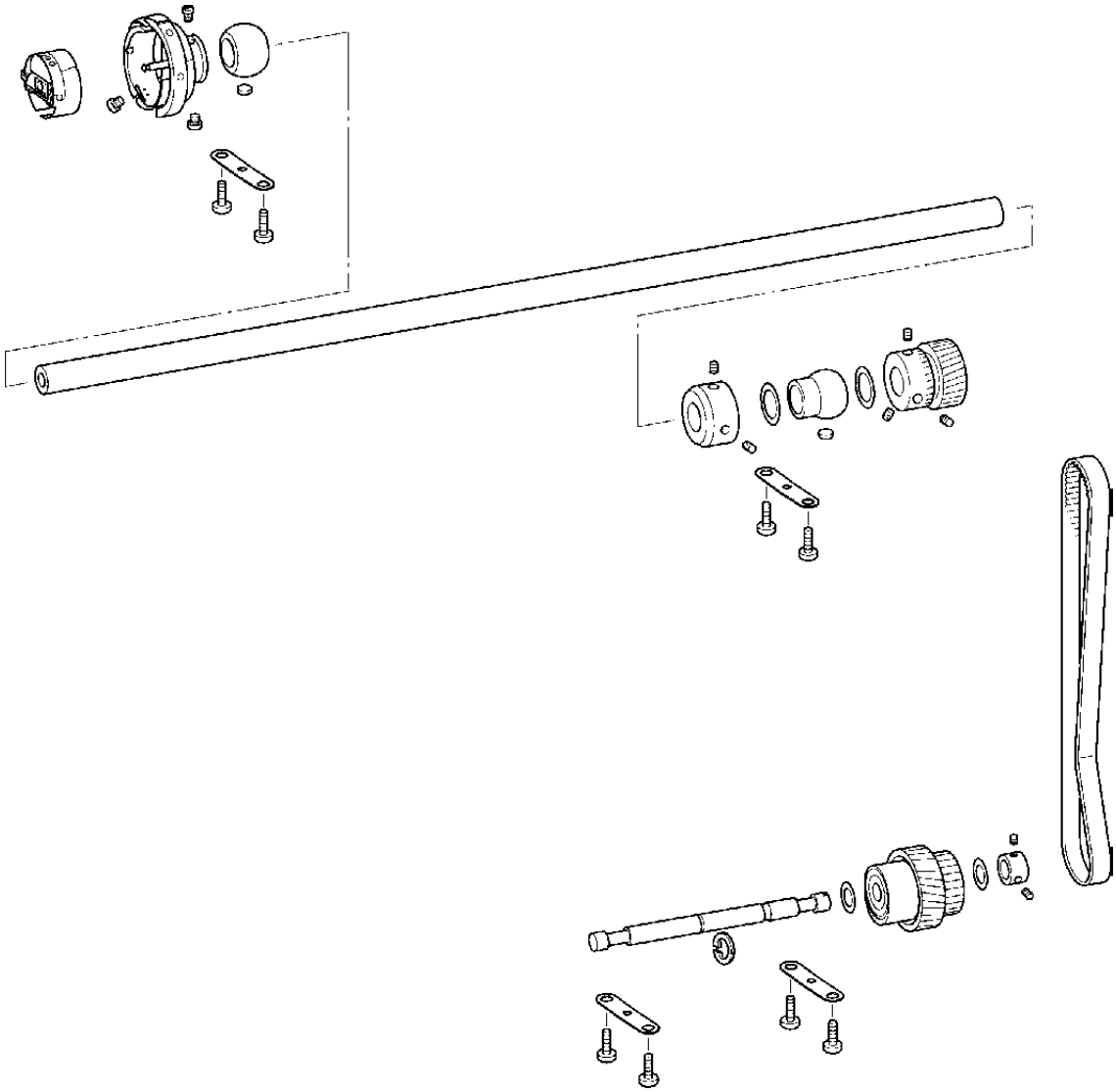

www.promelectroavtomat.ru

1 Arm bed and base frame disconnection

1. Mark the position where the arm bed is attached to the base frame. Mark the position on the base frame.

   ***Key point**
   - Marking prevents miss-location during re-assembly.

2. Remove the 4 screws ❶ and the 4 plain washers (M8), and then remove the arm bed from the base frame.

Start movie clip (CD-ROM version only)

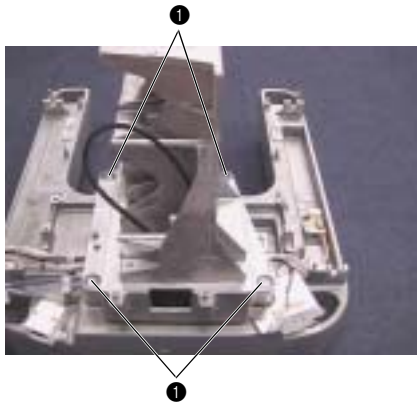

2 Idle pulley assembly removal

1. Remove the 4 screws ❶, and then remove the 2 bushing pressers.
2. Remove the idle pulley assembly ①.

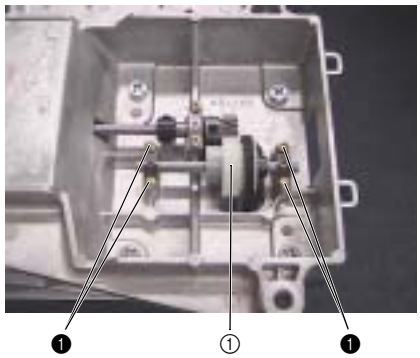

3 Idle pulley disassembly

1. Remove the 2 screws ❶, and then remove the set screw collar, thrust washer, idle pulley, and second thrust washer.
2. Remove the retaining ring E7 from the idle pulley shaft.

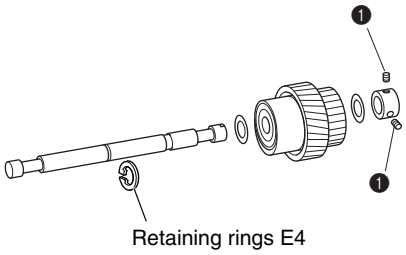

www.promelectroavtomat.ru

4 Lower shaft removal

1. Remove the 4 screws ❶, and then remove the 2 bushing pressers.
2. Remove the 2 collar screws ❷, and then remove the lower shaft ①, lower shaft metal F, set collar, thrust wafer 7.24, lower shaft metal R, and second thrust wafer 7.24.
3. Remove the 3 screws ❸, and then remove the lower shaft gear from the lower shaft.
4. Remove the 2 felts ② from the metal collar on the arm bed.

Start movie clip (CD-ROM version only)

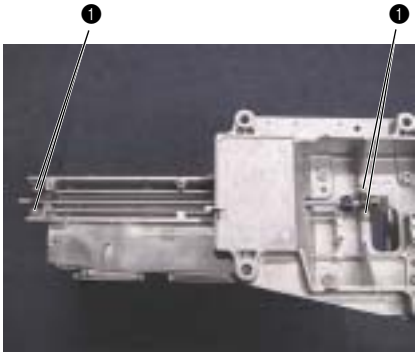

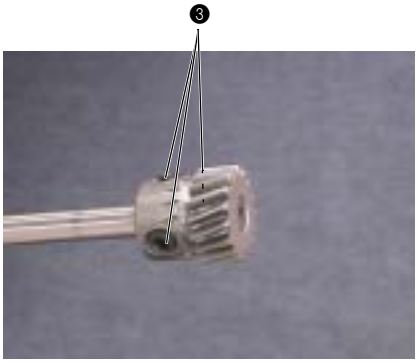

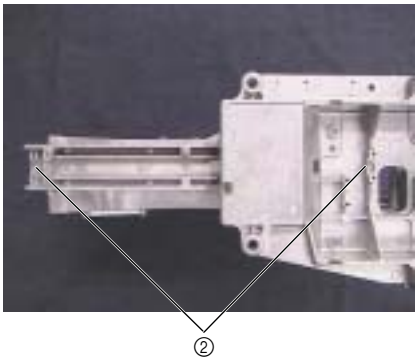

www.promelectroavtomat.ru

Power unit

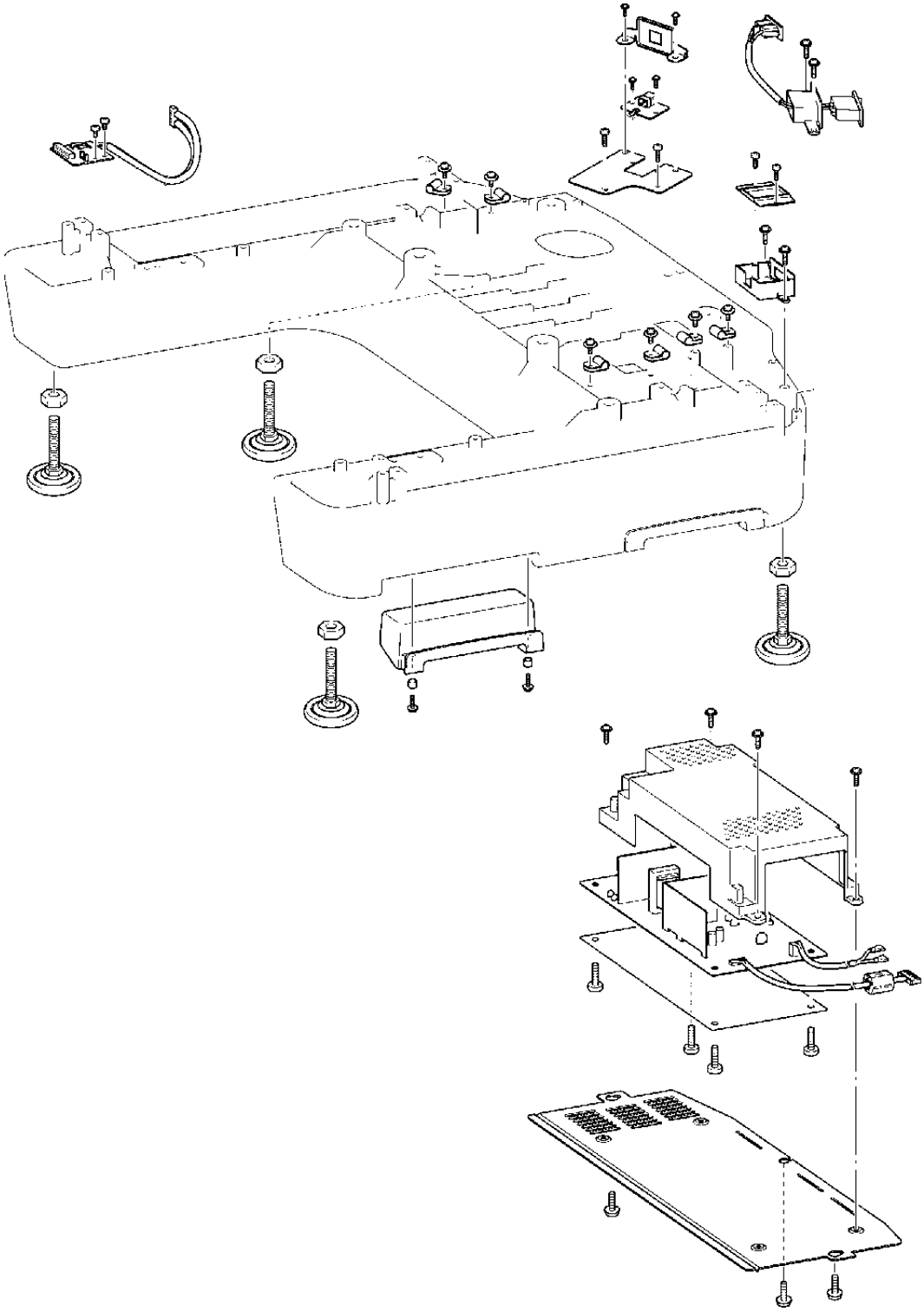

www.promelectroavtomat.ru

1 Power switch assembly and inlet removal

1. Remove the 3 screws ❶ and the 3 cord clamps (NK-6N), and then remove the power PCB assembly's lead wire, USB lead wire assembly, Y-area sensor assembly's lead wire, and power unit lead wire assembly from the base frame.
2. Remove the 2 screws ❷ and remove the inlet cover lid, and then remove the rocker switch on the power switch assembly from the inlet cover.
3. Remove the 2 screws ❸, and then remove the inlet cover.
4. Remove the 2 screws ❹, and then remove the power switch assembly.
5. Remove the 2 power lead wire assemblies ① from the power switch assembly.

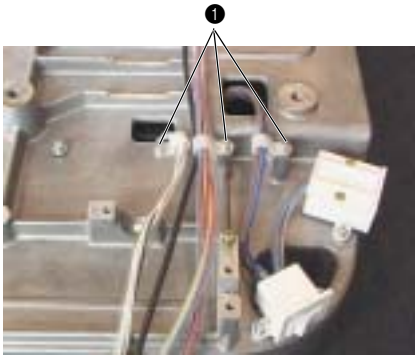

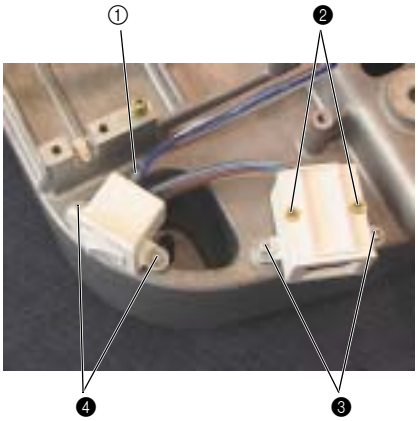

www.promelectroavtomat.ru

2 USB PCB assembly and Y-area sensor assembly removal

1. Remove the 2 screws ❶ and the 2 cord clamps (NK-6N), and then remove the USB PCB's lead wire and the Y-area sensor's lead wire from the base frame.
2. Remove the 2 screws ❷, and then remove the Y-area sensor assembly.
3. Remove the 2 screws ❸, and then remove the USB PCB holder assembly.
4. Remove the 2 screws ❹, and then remove the USB PCB cover from the USB PCB holder assembly.
5. Remove the 2 screws ❺, and then remove the USB PCB assembly from the USB PCB holder.

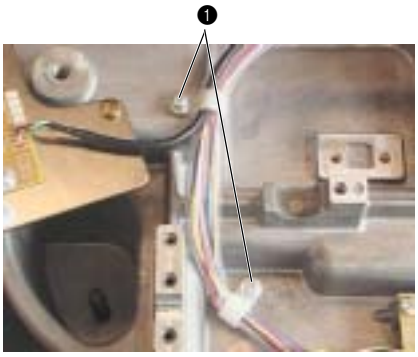

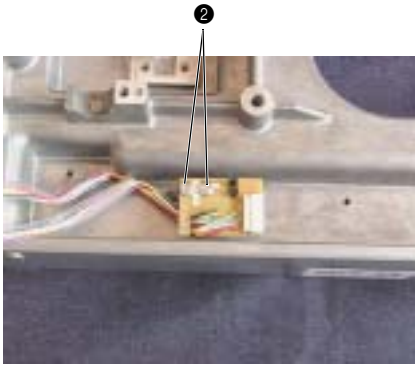

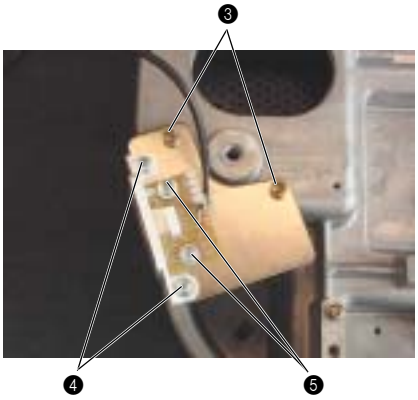

www.promelectroavtomat.ru

3 Power PCB assembly removal

1. Remove the 3 screws ❶, and then remove the PCB holder final assembly.

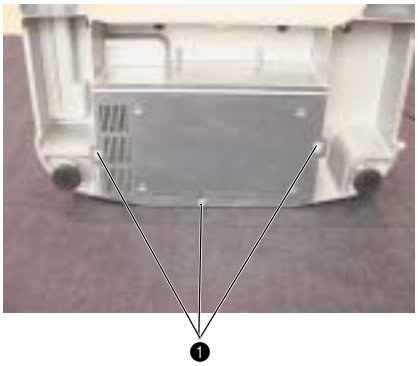

4 Power PCB disassembly

1. Disconnect the power lead wire assembly ① from the power PCB assembly 100 (or 200).
2. Remove the 4 screws ❶, and then remove the power unit cover assembly from the power unit stay.
3. Remove the 4 screws ❷, and then remove the insulation sheet and the power PCB assembly from the power unit cover assembly.

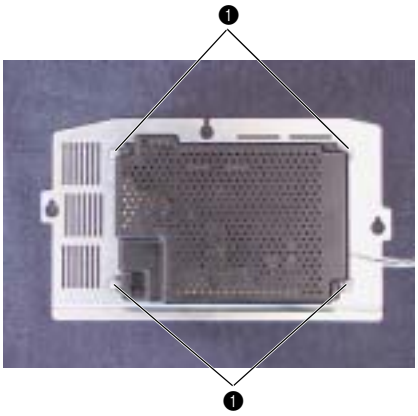

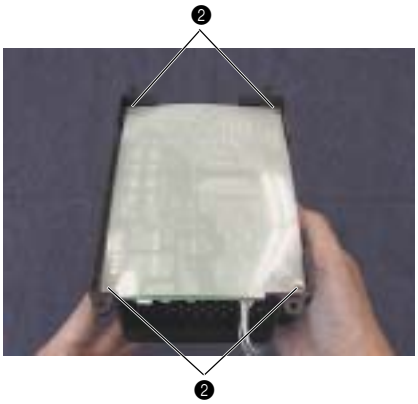

www.promelectroavtomat.ru

5 Adjust-bolt removal

1. Remove the 4 adjust-bolt assemblies ① from the base frame.
2. Remove the 4 nuts (2, M8) from the 4 adjust-bolt assemblies.
3. Remove the 2 screws ❶, and then remove the handle ②. (4 locations)
4. Remove the 2 bushes ③ from the handle ②. (4 locations)

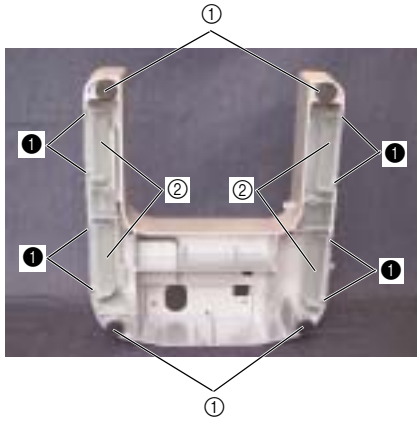

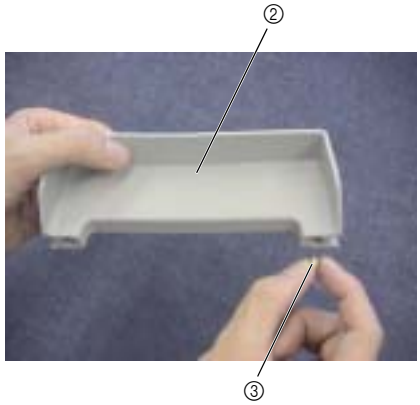

www.promelectroavtomat.ru

Thread cut unit

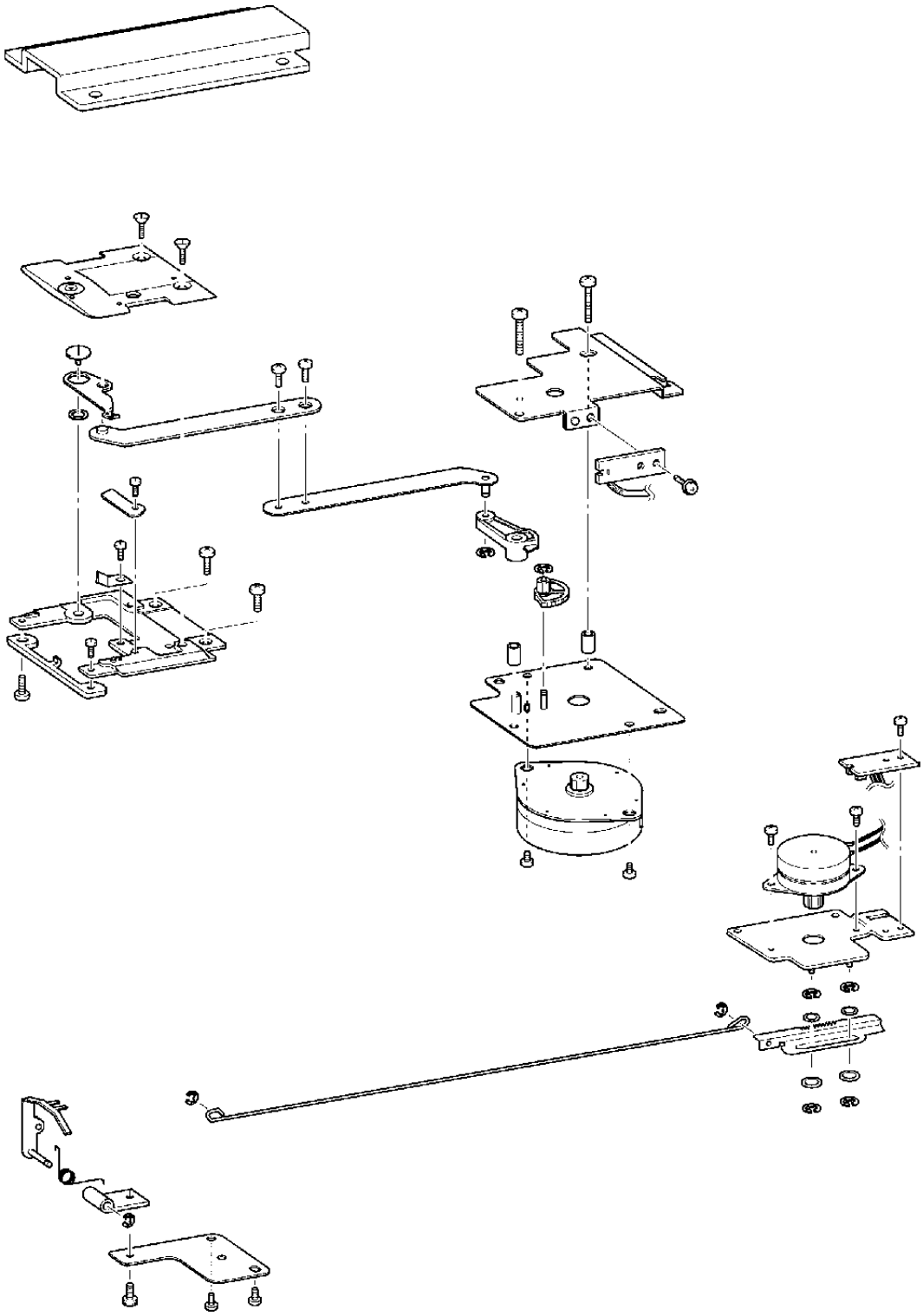

www.promelectroavtomat.ru

1 Picker disassembly

1. Remove the retaining ring E2, and then remove the washer and the picker link ①.
2. Remove the screw ❶, and then remove the picker sensor assembly.
3. Remove the 2 retaining rings E2, 2 plain washers S3, rack assembly, and 2 plain washers S3.
4. Remove the 2 retaining rings E2.
5. Remove the 2 screws ❷, and then remove the picker motor assembly.

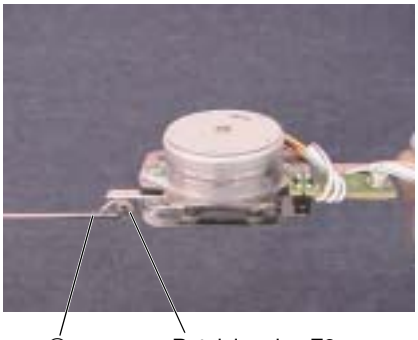

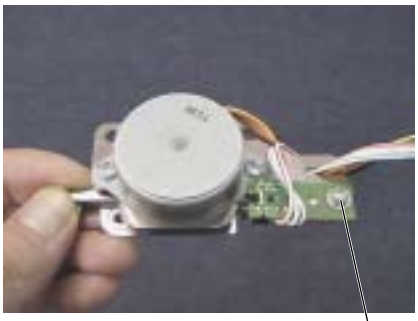

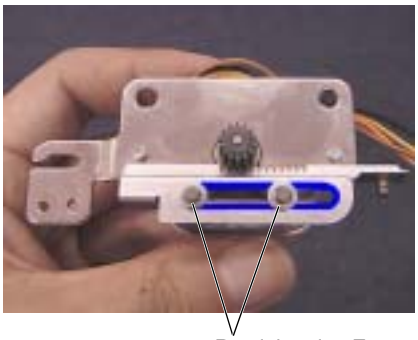

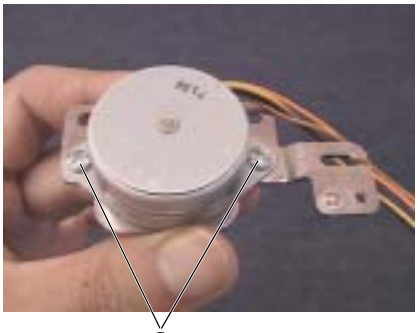

www.promelectroavtomat.ru

2 Cutter unit disassembly (Step 1)

1. Remove the retaining ring E2, and then remove the lever link assembly.
2. Remove the screw ❶, and then remove the thread cutter sensor assembly (white).
3. Remove the 2 screws ❷, separate the cutter bracket ① from the CT motor bracket assembly ②, and then remove the 2 collars.

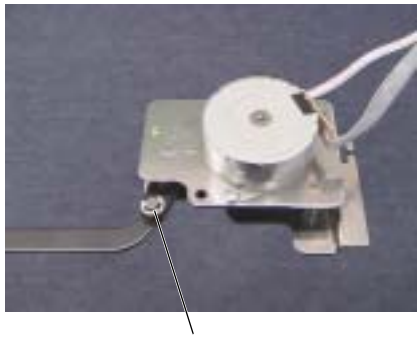

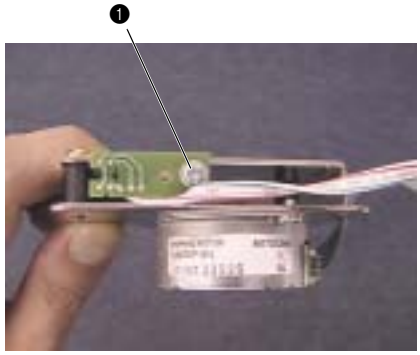

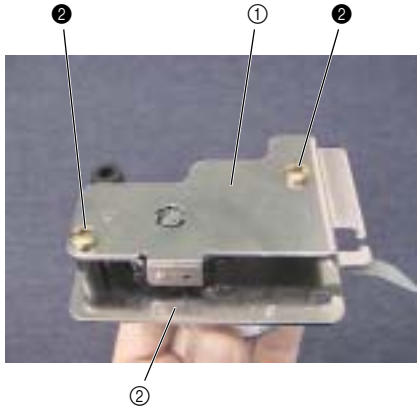

www.promelectroavtomat.ru

3 Cutter unit disassembly (Step 2)

1. Remove the lever gear ①.
2. Remove the retaining ring E2, and then remove the initial gear.
3. Remove the 2 screws ❶, and then remove the thread cutter motor assembly.

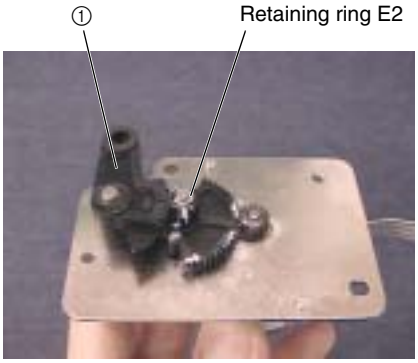

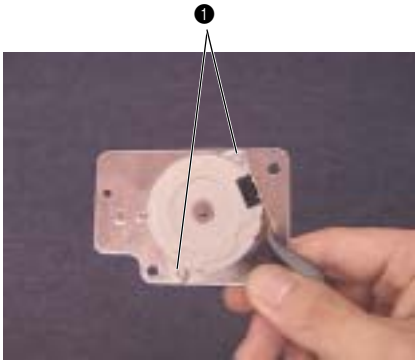

www.promelectroavtomat.ru

Thread tension unit

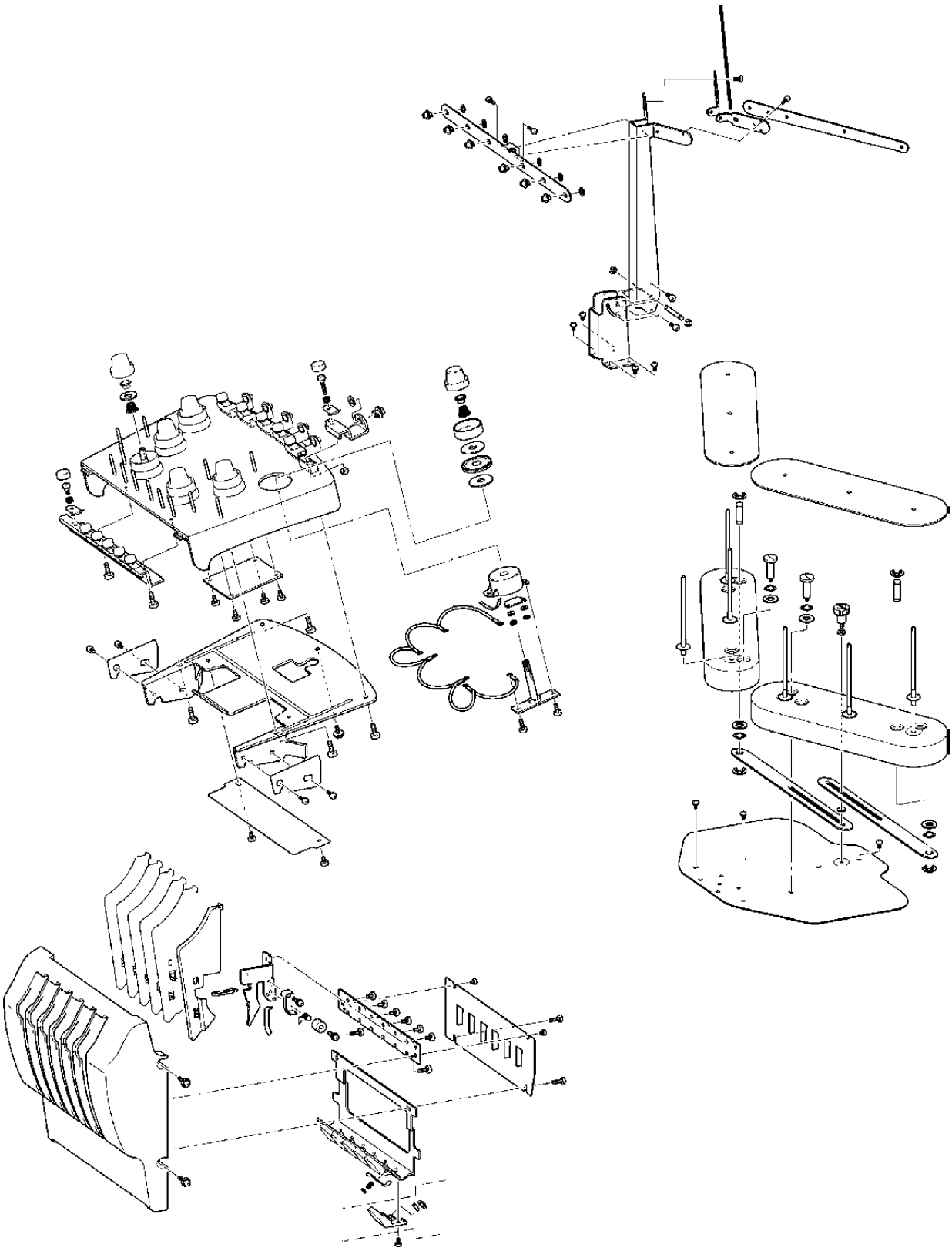

www.promelectroavtomat.ru

1 Loosen the tension nut removal

1. Loosen the tension nut ①, and then remove the washer ②, spring S51 , tension disc presser ③, tension disc felt ④, rotary disc assembly ⑤, and second tension disc felt ④. (6 locations)

NOTE

- The thread tension washer ⑥ is inserted between the washer ② and the spring S51 only for thread tension A.

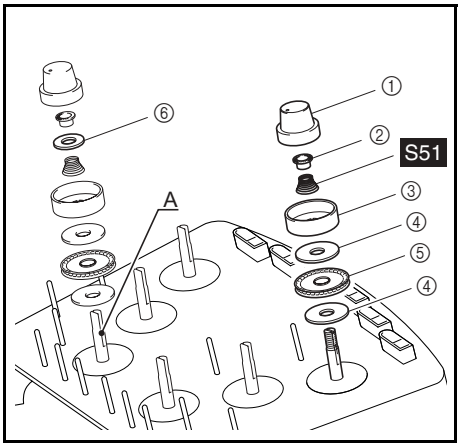

2 Tension base bracket removal

1. Remove the cord bush (KR51) ① from the tension base bracket, and then remove the tension base lead wire assembly ② from the head PCB assembly on the tension base.
2. Remove the screw ❶, and then remove the head grounding wire.
3. Remove the 4 screws ❷, and then remove the tension base bracket.
4. Remove the 2 screws ❸, and then remove the bracket cover from the tension base bracket.

Start movie clip (CD-ROM version only)

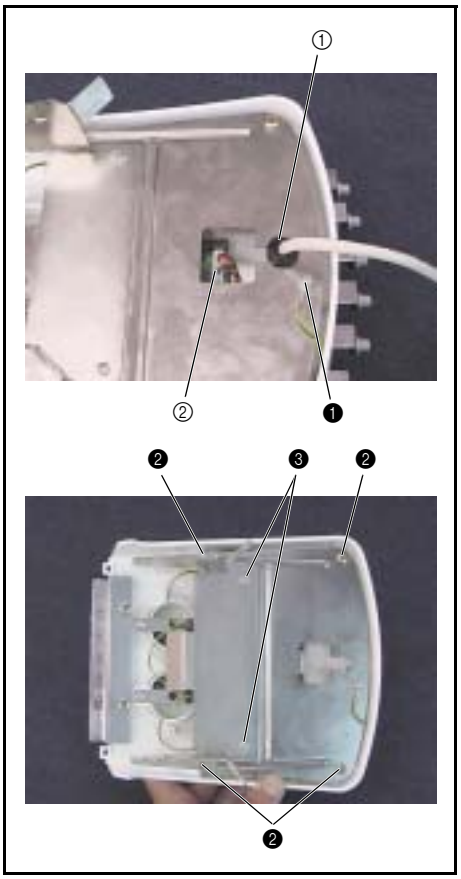

Disassembly

www.promelectroavtomat.ru

3 Inner thread eyelet base removal

1. Remove the 2 screws ❶, and then remove the inner thread eyelet base assembly from the tension base assembly.
2. Remove the tension axis cap ①. (6 locations)
3. Loosen the thread guide tension axis ②, and then remove the spring S52 and the thread guide tension plate ③. (6 locations)

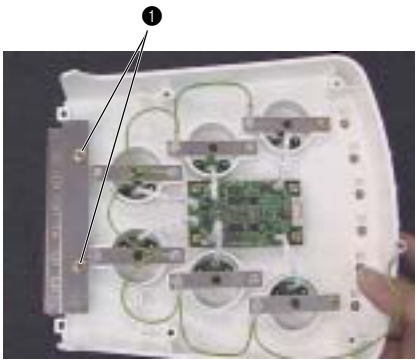

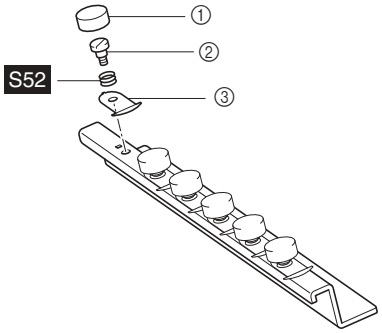

4 Thread sensor PCB assembly and head PCB assembly removal

1. Disconnect the FFC (SML2CD-H) from the head PCB assembly ①. (6 locations)
2. Remove the 4 screws ❶, and then remove the head PCB assembly.
3. Remove the 2 screws ❷, and then remove the thread tension bracket, thread quantity sensor cover, and head grounding wire assembly. (6 locations)
4. Remove the 2 retaining rings CS2, and then remove the 2 rubber washers and the thread sensor assembly ② from the thread quantity sensor cover. (6 locations).
5. Remove the FFC (SML2CD-H) from the thread sensor assembly.

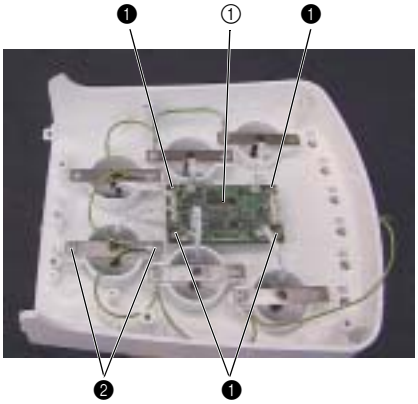

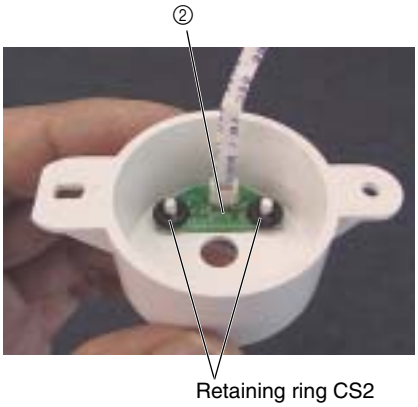

www.promelectroavtomat.ru

5 Upper thread eyelet base removal

1. Remove the tension axis cap ①. (6 locations)
2. Loosen the thread guide tension screw ②, and remove the nut (2, M3). Then remove the thread guide tension plate, spring S53 , and upper thread eyelet base. (6 locations)

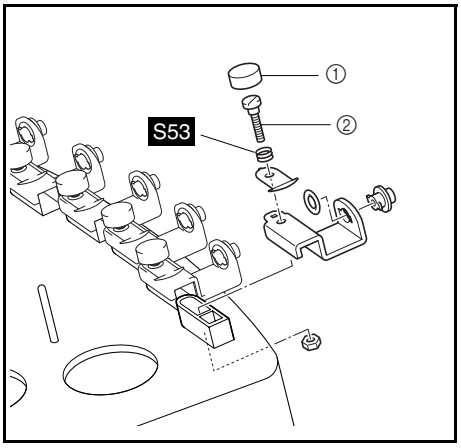

6 Antenna assembly removal

1. Remove the 4 screws ❶, and then remove the antenna assembly from the thread stand base assembly.

www.promelectroavtomat.ru

7 Antenna disassembly

1. Remove the 4 screws ❶, and then remove the 2 antennas A, 2 antennas B, and antenna E assembly from the antenna C assembly.
2. Remove the screws ❷❸ from the antenna C assembly.
3. Remove the retaining ring E5, separate the antenna C assembly from the antenna D, and then remove the antenna shaft.
4. Remove the retaining ring E5 from the antenna shaft.
5. Remove the 6 O-rings (P5) from the tip of the 6 pipe bushes A ① attached to the antenna E assembly, and then remove the 6 pipe bushes from the antenna E assembly.

***Key point**

- Turn the pipe bush 90 degrees to remove it.

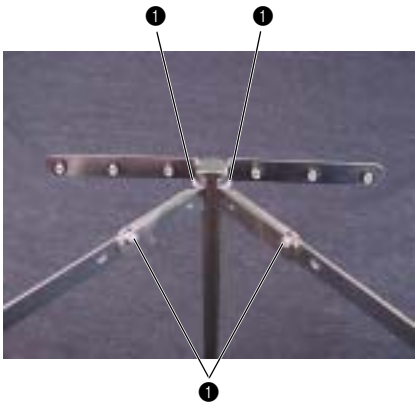

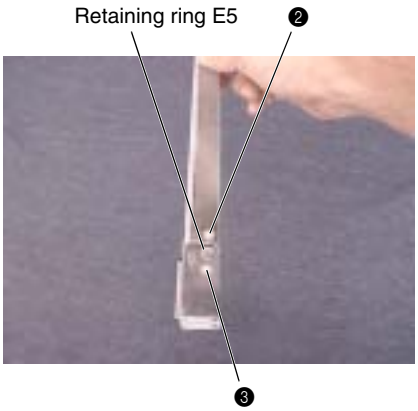

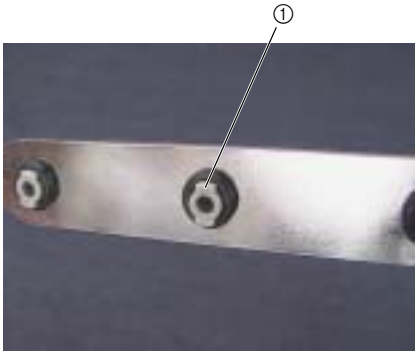

www.promelectroavtomat.ru

8 Spool stand frame disassembly (Step 1)

1. Remove the 6 spool pins ① and the 2 sponges ② from the spool frame stand R and spool frame stand L.
2. Remove the thumb bolt (M4L) ③ and the 2 washers, and then disconnect the spool stand link R from the spool link L.
3. Remove the 2 stud screws ④, 2 spring washers, and 2 plain washers (S10), and then remove the spool stand frame L and spool stand frame R from the spool stand base.

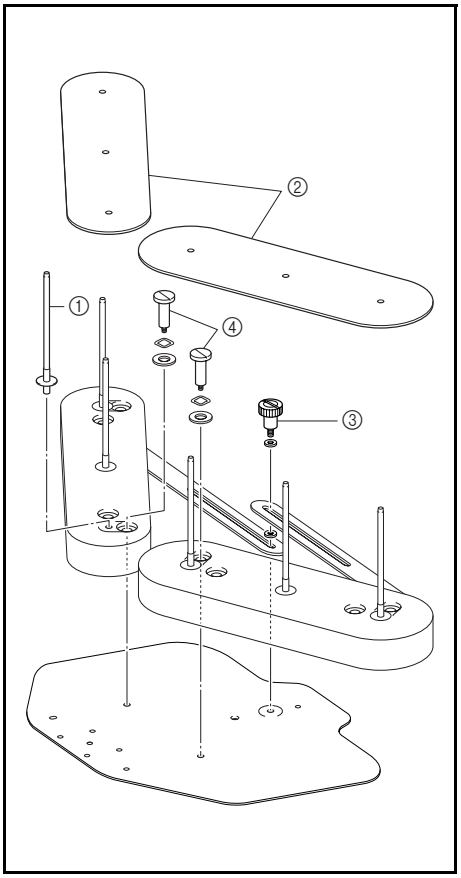

9 Spool stand frame disassembly (Step 2)

1. Remove the retaining ring E8, and then remove the spool stand link, spring washer, plain washer (S10), and spool stand stud from the spool stand frame L assembly.
2. Remove the retaining ring E8, and then remove the spool stand link, spring washer, plain washer (S10), and spool stand stud from the spool stand frame R assembly.
3. Remove the retaining ring E8 from the spool stand stud. (2 sets)

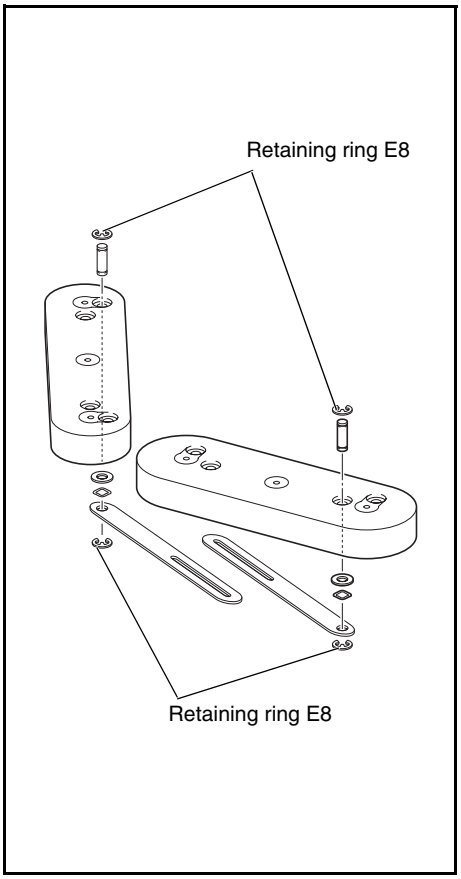

www.promelectroavtomat.ru

10 Thread take-up lever cover disassembly (Step 1)

1. Remove the 4 screws (❶ ❷, 2 each), and then remove the thread holder base assembly and the thread guide back cover.
2. Remove the screw ❸, and then remove the cutter cover assembly from the thread holder base assembly. (6 locations)
3. Remove the retaining ring CS5 from the cutter cover assembly, and then remove the 6 NT lower thread cutters.
4. Remove the 6 retaining rings E1.5, and then remove the 6 needle thread presser plates and the 6 springs S50 from the thread holder base.

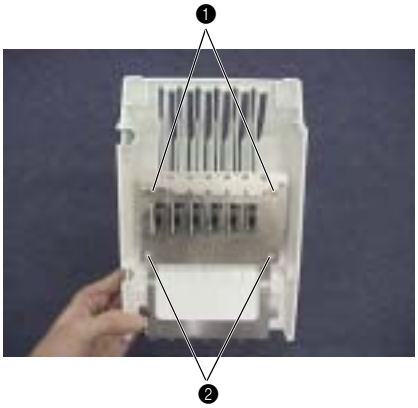

www.promelectroavtomat.ru

11 Thread take-up lever cover disassembly (Step 2)

1. Remove the 2 screws ❶, and then remove the thread tension bracket base.
2. Remove the 6 screws ❷, and then remove the thread tension bracket base.
3. Remove the 6 thread guide cover assemblies ② from the thread take-up lever cover ①.
4. Remove the thread take-up bracket assembly ③ from the thread guide cover assembly. (6 sets)

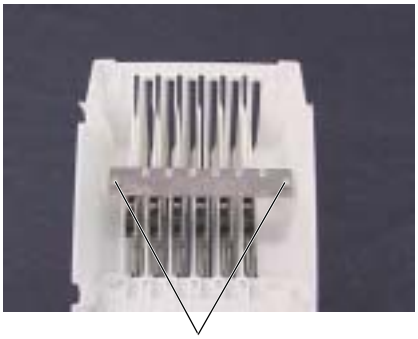

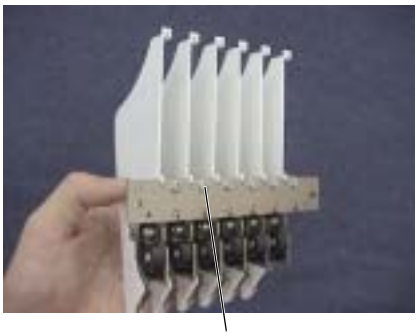

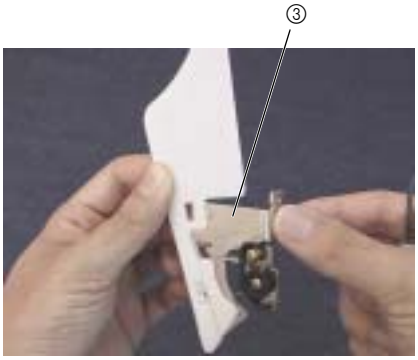

www.promelectroavtomat.ru

12 Thread take-up bracket disassembly

***Key point**

- Disassemble the six thread take-up bracket assemblies.

1. Remove the screw ❶, and then remove the thread guide wire and the thread guard.
2. Remove the screw ❷, and then remove the thread catching spring case assembly.
3. Remove the spring S49 from the thread catching spring case.

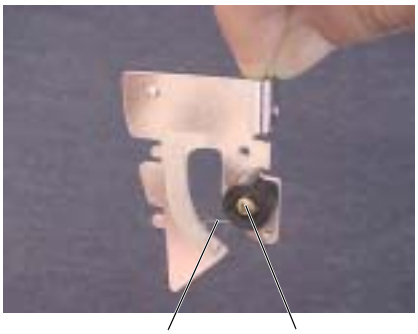

www.promelectroavtomat.ru

Operation panel

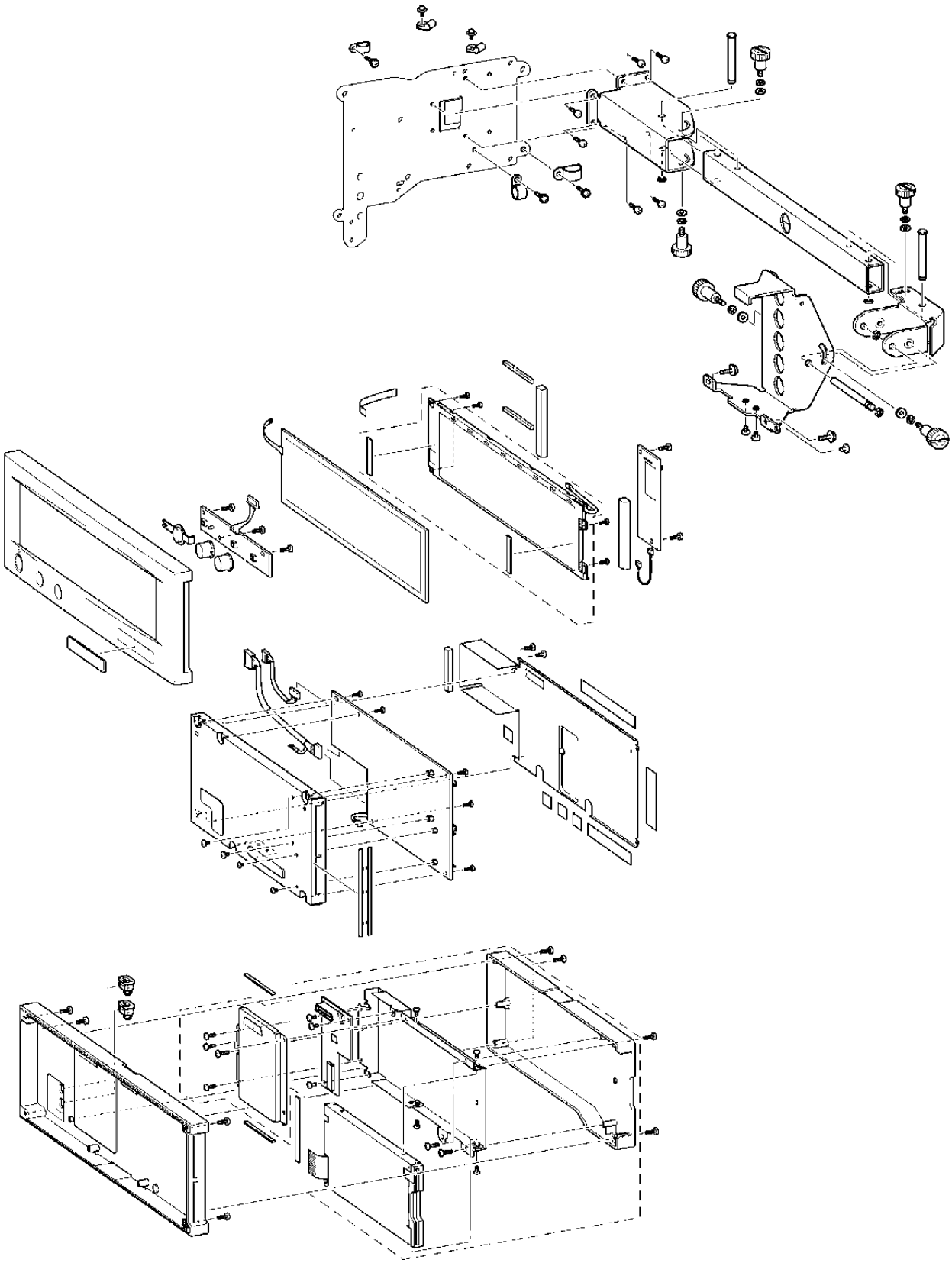

www.promelectroavtomat.ru

1 FD assembly removal

1. Remove the 4 screws ❶ and the screw ❷, and then remove the FD assembly from the operation panel assembly.

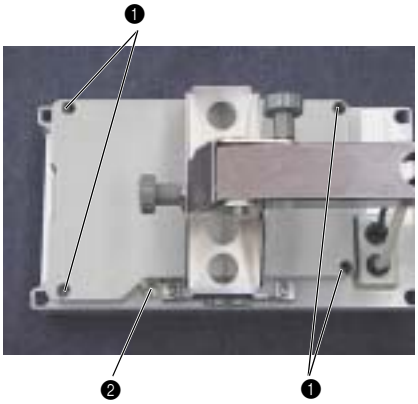

2 FD disassembly (Step 1)

1. Remove the 3 screws ❶, and then remove the FD case assembly from the FD cover.
2. Remove the 3 screws ❷, and then remove the FD case B.

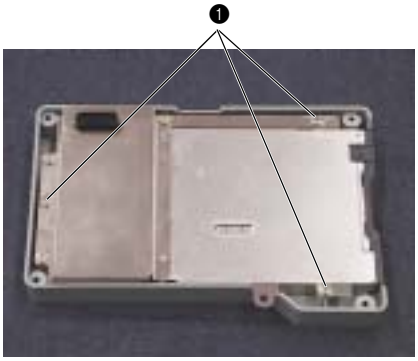

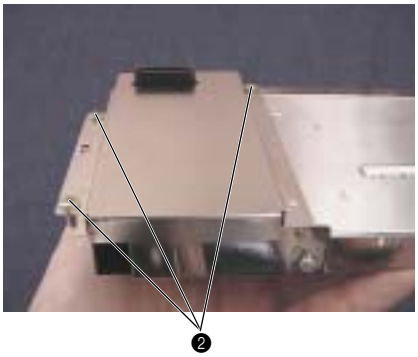

www.promelectroavtomat.ru

3 FD disassembly (Step 2)

1. Unlock the FD PCB assembly's connector ①, and then disconnect the FFC (SML2CD-FDD) from the FD PCB assembly.
2. Remove the 3 screws ❶, and then remove the FD PCB assembly.
3. Remove the 4 screws ❷, and then remove the FD unit (FDDFD-05HG-5661) from the FD case A.
4. Unlock the FD unit's (FDDFD-05HG-5661) connector ②, and then disconnect the FFC (SML2CD-FDD).

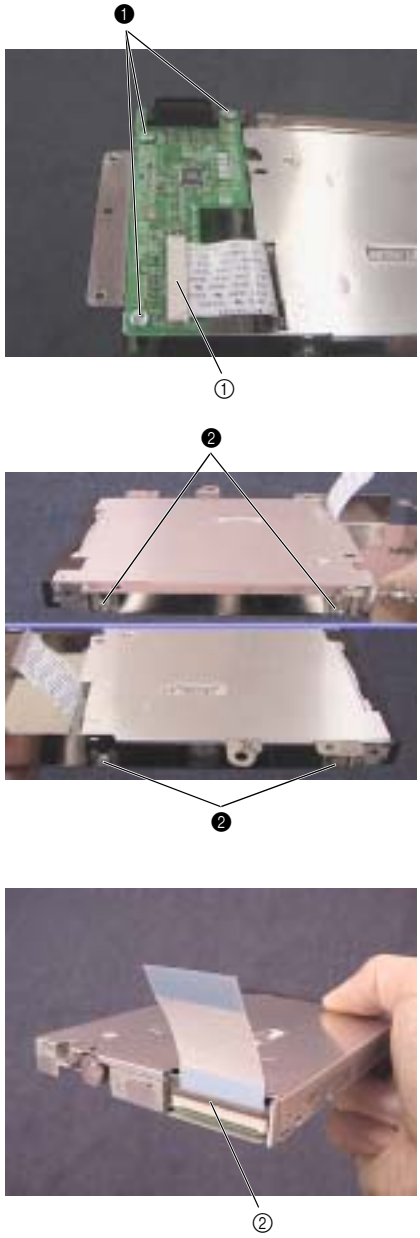

4 Operation panel lever assembly removal

1. Remove the 4 screws (❶ ❷, 2 each), and then remove the operation panel lever assembly from the operation panel final assembly.

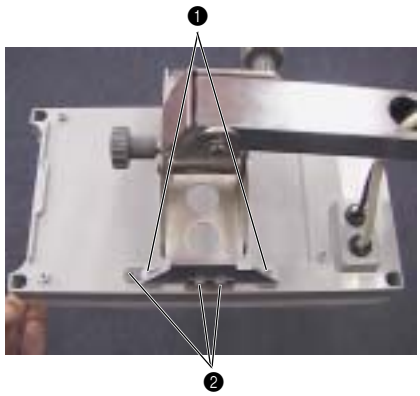

www.promelectroavtomat.ru

5 Operation panel lever disassembly (Step 1)

1. Remove the thumb bolt (M4 L) ①, spring washer (2-4), and plain washer (M4). (2 locations)
2. Remove the retaining ring E6 inside the operation panel lever A, and then remove the operation panel holder shaft.
3. Remove the retaining ring E6 from the operation panel holder shaft.
4. Remove the operation panel holder ② from the operation panel lever A.

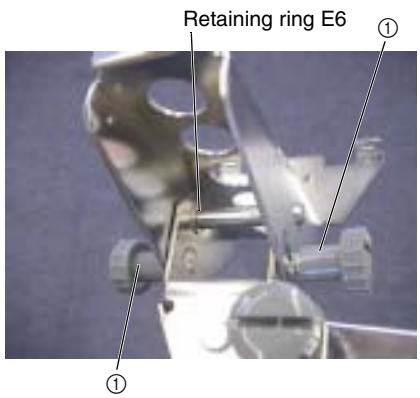

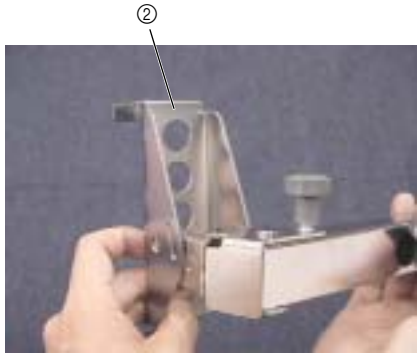

6 Operation panel lever disassembly (Step 2)

1. Remove the thumb bolt (M4 L) ①, spring washer (2-4), and plain washer (M4). (3 locations)
2. Remove the retaining ring E6, and then remove the operation panel level shaft. (2 locations)
3. Remove the operation panel lever A ② and the operation panel lever C ③ from the operation panel lever B.

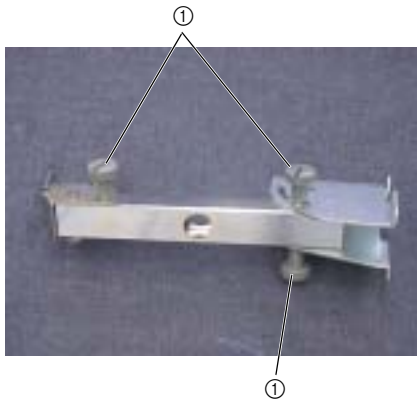

www.promelectroavtomat.ru

7 Operation panel B removal

1. Remove the 4 screws ❶, and then remove the operation panel B from the operation panel A assembly.
2. Push the panel lead wire assembly A and the cord bush (KR51) ① from inside the operation panel B to force them out of the operation panel B, and then remove the cord bush (KR51) from the panel lead wire assembly A.
3. Push the USB lead wire assembly A and the cord bush (KF41) ② from inside the operation panel B to force them out of the operation panel B, and then remove the cord bush (KF41) from the USB lead wire assembly A.
4. Remove the 2 screws ❷, and then remove the board case B.

www.promelectroavtomat.ru

8 Panel PCB assembly removal

1. Remove the UBS lead wire assembly A ① and the panel lead wire assembly A ② from the panel PCB assembly.
2. Unlock the panel PCB assembly's connector ③, and then disconnect the touch panel's lead wire and the LCD cable from the panel PCB assembly.
3. Disconnect the switch PCB assembly's lead wire ④ and the inverter lead wire assembly ⑤ from the panel PCB assembly.
4. Remove the 5 screws ❶, and then remove the board case A assembly from the operation panel A assembly.
5. Remove the 4 screws (❷ ❸, 2 each), and then remove the panel PCB assembly from the board case A.
6. Remove the 2 studs (M2) ⑥, 2 nuts (2, M2), 2 second studs (M3) ⑦, and 2 nuts (2, M3) from the panel PCB assembly.

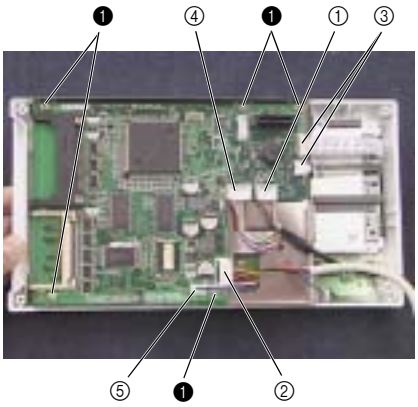

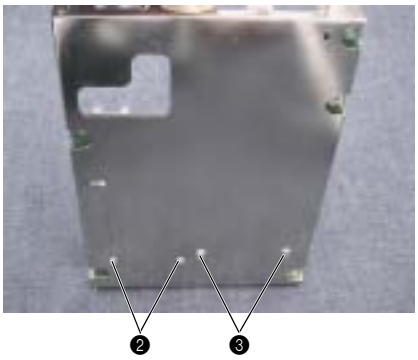

www.promelectroavtomat.ru

9 LCD removal

1. Disconnect the inverter lead wire ① from the inverter (IM4302).
2. Remove the 2 screws ❶, and then remove the inverter (IM4302) from the operation panel A.
3. Remove the lead wire (LCDM8M64) ② from the inverter (IM4302).
4. Remove the 4 screws ❷, and then remove the LCDM (LM8M64) ③.
5. Unlock the LCDM's (LM8M64) connector ④, and disconnect the LCD cable from the LCDM (LM8M64).

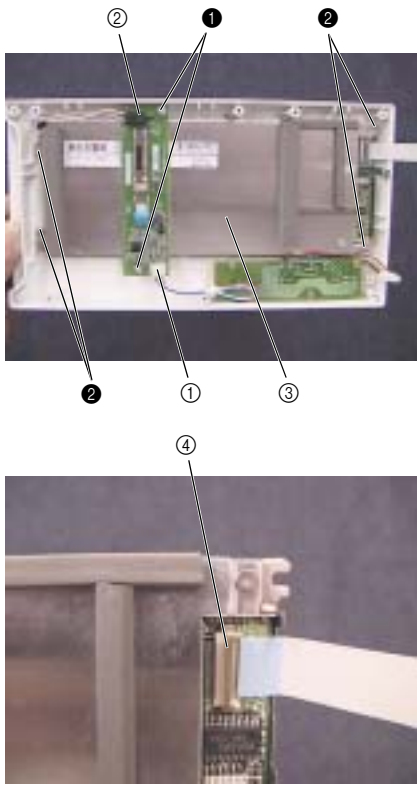

10 Touch panel removal

1. Remove the touch panel (EMU601A2B040) ① from the operation panel A.

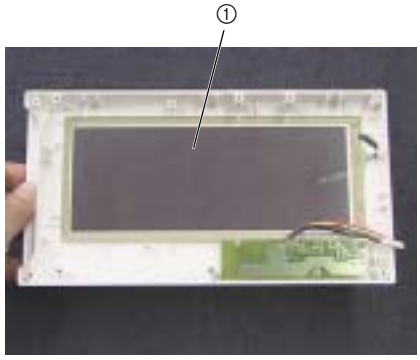

www.promelectroavtomat.ru

11 Button removal

1. Remove the 3 screws ❶, and then remove the switch PCB assembly from the operation panel A.
2. Remove the SS button ①, operation button ②, and thread cut button ③ from the operation panel A.

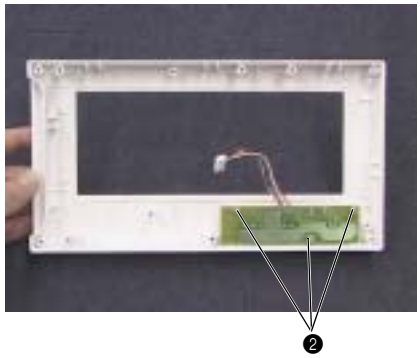

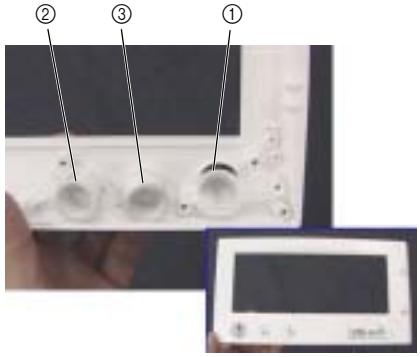

www.promelectroavtomat.ru

3 Assembly

Main unit

Operation panel .....3 - 2
Thread tension unit.....3 - 12
Thread cut unit.....3 - 22
Power unit.....3 - 26
Lower shaft unit .....3 - 32
Upper shaft unit .....3 - 36
Needle bar unit .....3 - 51
Thread wiper unit.....3 - 61
Needle bar change unit .....3 - 66
Needle thread unit .....3 - 70
Feed unit.....3 - 74
Main unit .....3 - 93

www.promelectroavtomat.ru

Operation panel

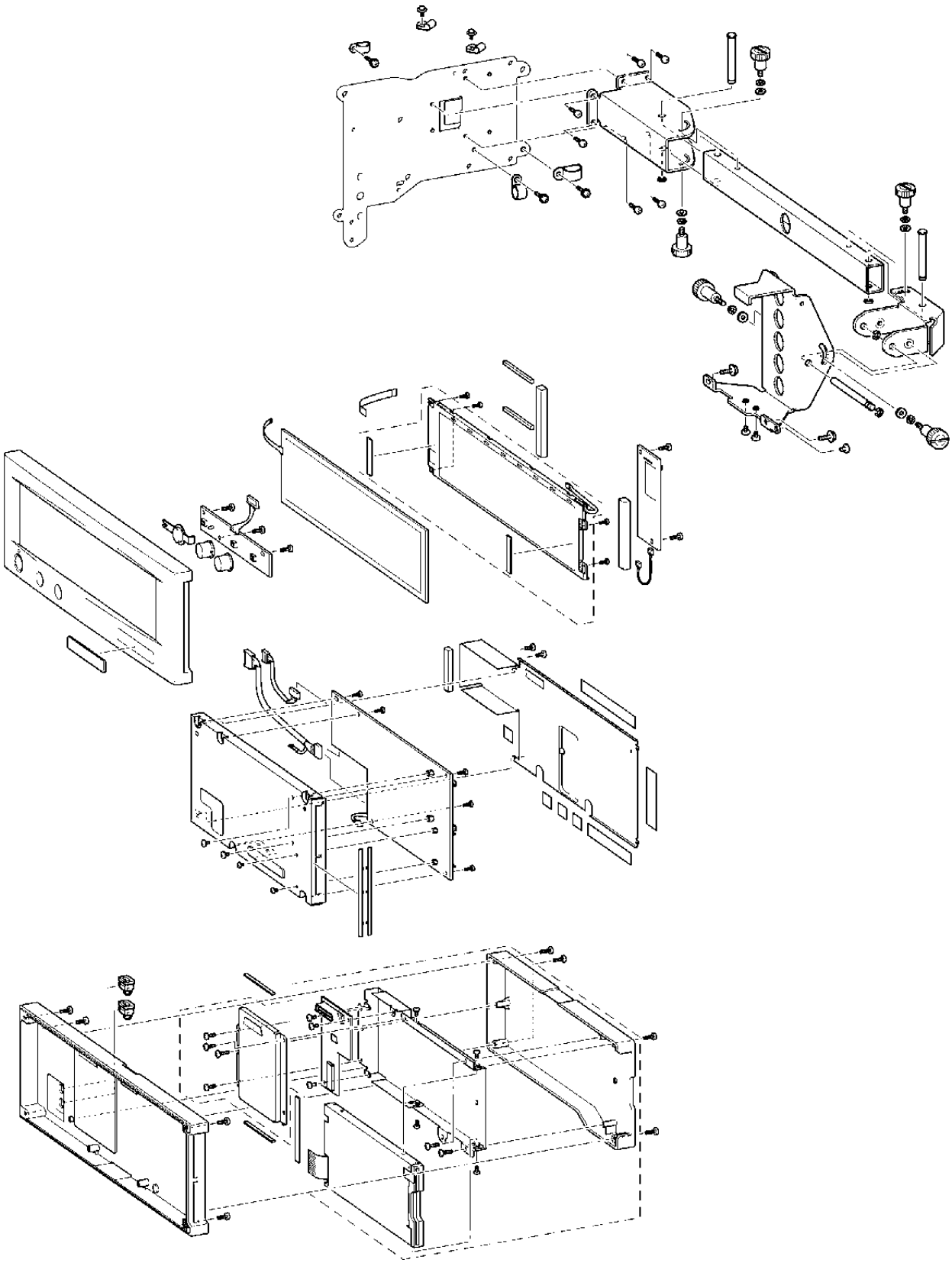

www.promelectroavtomat.ru

1 Button attachment

1. Attach the SS button ①, operation button ②, and thread cut button ③ to operation panel A.
2. Attach the switch PCB assembly ④ with the 3 screws ❶.

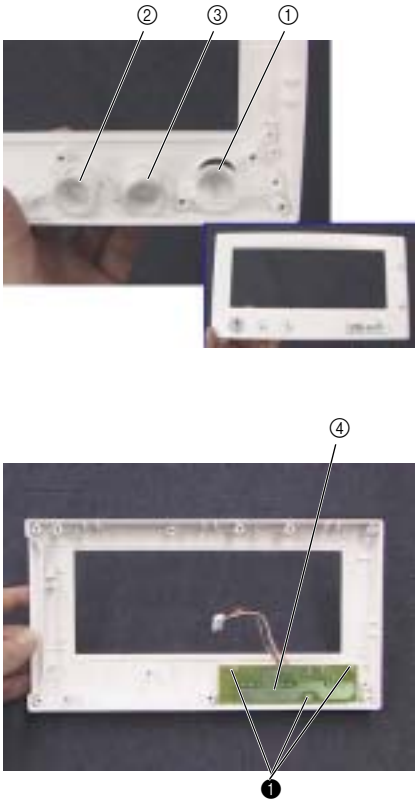

❶	Taptite, Bind B M3X8 Color; Gold	Torque 0.39 – 0.79 N-m

2 Touch panel attachment

1. Attach the touch panel (EMU601A2B040) ① to operation panel A.

***Key point**

- Attach the touch panel so that the face with the flat cable connected is on the front side.

Start movie clip (CD-ROM version only)

www.promelectroavtomat.ru

3 LCD attachment

1. Connect the LCD cable to the LCDM (LM8M64) and lock the connector.

   ***Key point**
   - Connect the LCD cable so that the blue face of the cable is on the front side.
2. Attach the LCDM (LM8M64) to operation panel A with the 4 screws ❶.
3. Connect the lead wire (LCDM8M64) to the inverter (IM4302) ①.
4. Attach the inverter (IM4302) to operation panel A with the 2 screws ❷.
5. Connect the inverter lead wire ② to the inverter (IM4302).
6. Attach the 2 gaskets A ③ and the 3 gaskets B ④ to the LCDM (LM8M64)

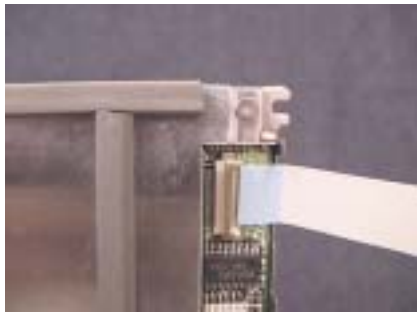

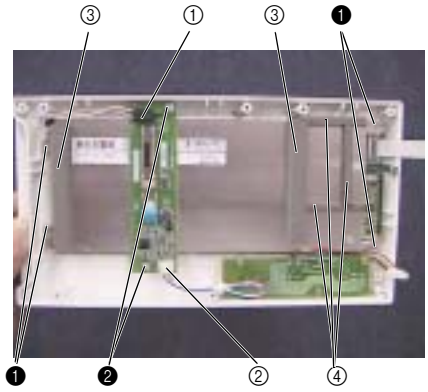

❶		Taptite, Bind P M2X6 Color; Gold	Torque 0.19 – 0.39 N-m
❷		Taptite, Bind B M3X8 Color; Gold	Torque 0.39 – 0.78 N-m

www.promelectroavtomat.ru

4 Panel PCB assembly attachment

1. Attach the panel PCB assembly to board case A with the 4 screws (❶ ❷, 2 each).
2. Attach board case A and the panel PCB assembly to the operation panel A assembly with the 5 screws ❸.
3. Connect the switch PCB assembly's lead wire ①, inverter lead wire assembly ②, LCD cable ③, and touch panel's lead wire ④ to the panel PCB assembly.

   ***Key point**
   - Be sure to lock the connectors after the touch panel's lead wire and the LCD cable have been connected to the panel PCB.
4. Connect the USB lead wire assembly A ⑤ and the panel lead wire assembly A ⑥ to the panel PCB assembly.

❶		Screw, Truss M2X3 Color; Silver	Torque 0.29 – 0.49 N-m
❷		Screw, Bind M3X3 Color; Silver	Torque 0.78 – 1.18 N-m
❸		Taptite, Bind B M3X8 Color; Gold	Torque 0.39 – 0.78 N-m

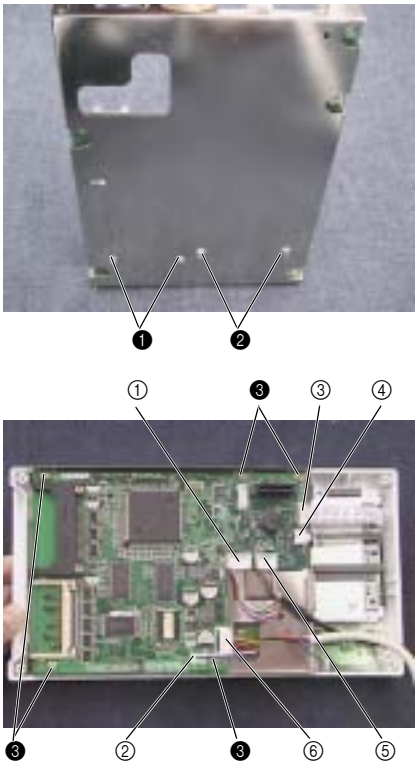

Assembly

www.promelectroavtomat.ru

5 Operation panel B attachment

1. Insert the 2 lugs ① on board case B to the corresponding holes on board case A to attach board case B to board case A.
2. Tighten the 2 screws ❶. (Tighten one of these ② with panel lead wire assembly A's grounding wire.)
3. Thread panel lead wire assembly A and USB lead wire assembly A through the 2 holes ③ on operation panel B, and then attach operation panel B to the operation panel A assembly.
4. Tighten the 4 screws ❷.
5. Attach the cord bush (KF41) ④ (the section where the cord is pressed is a straight line) to the USB lead wire assembly A, and push it into the hole on operation panel B.
6. Attach the cord bush (KR51) ⑤ (the section where the cord is pressed is a curved line) to panel lead wire assembly A, and push it into the hole on operation panel B.

Start movie clip (CD-ROM version only)

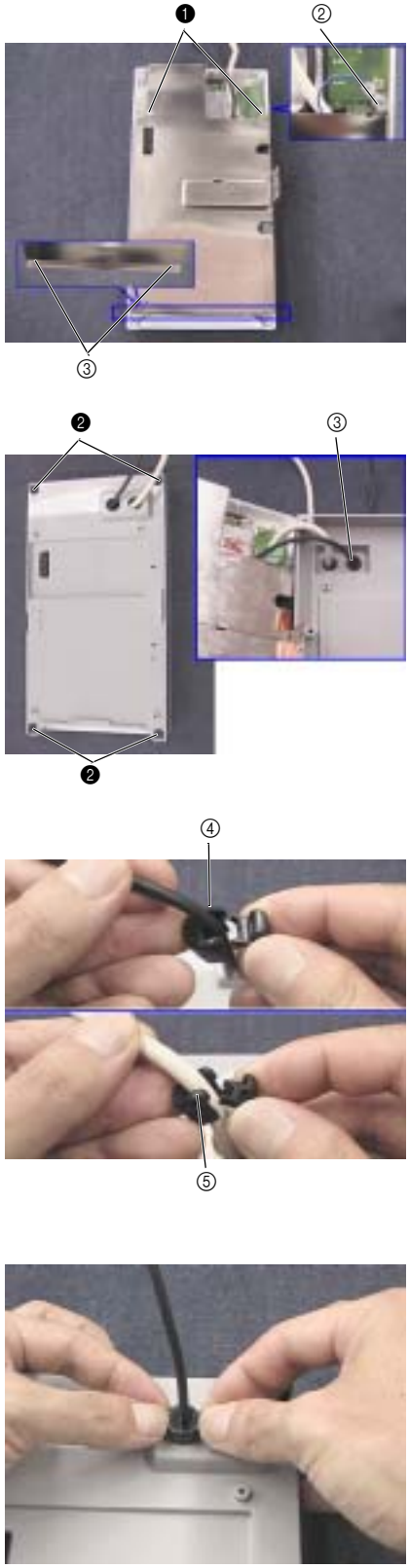

❶		Screw, Bind M3X6 Color; Silver	Torque 0.59 – 0.78 N-m
❷		Taptite, Bind B M3X8 Color; Gold	Torque 0.39 – 0.78 N-m

www.promelectroavtomat.ru

6 Operation panel lever assembly (Step 1)

1. Align operation panel lever B ② with operation panel lever C ①, thread the operation panel level shaft ③ through them, and then attach the retaining ring E6.
2. Align operation panel lever B ② with operation panel lever A ④, thread the operation panel level shaft ③ through them, and then attach the retaining ring E6.
3. Tighten the thumb bolt (M4 L) ⑤, spring washer (2-4) ⑥, and plain washer (M4) ⑦. (3 locations)

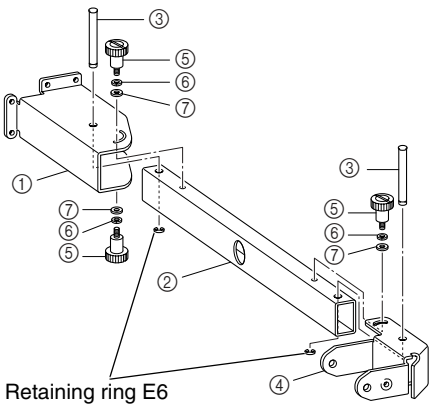

7 Operation panel lever assembly (Step 2)

1. Attach the retaining ring E6 to the operation panel holder shaft.
2. Align the operation panel holder ② with operation panel lever A ①, thread the operation panel holder shaft ③ through them, and then attach the retaining ring E6 from the inside of operation panel lever A.
3. Tighten the thumb bolt (M4 L) ④, spring washer (2-4) ⑤, and plain washer (M4) ⑥. (2 locations)

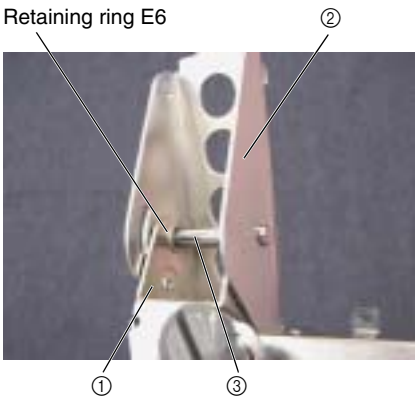

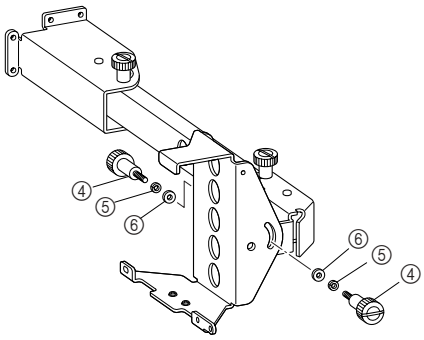

Assembly

www.promelectroavtomat.ru

8 Operation panel lever assembly attachment

1. Insert the operation panel holder into the groove ① on the operation panel final assembly to attach the operation panel final assembly to the operation panel holder.
2. Tighten the 4 screws (❶ ❷, 2 each).

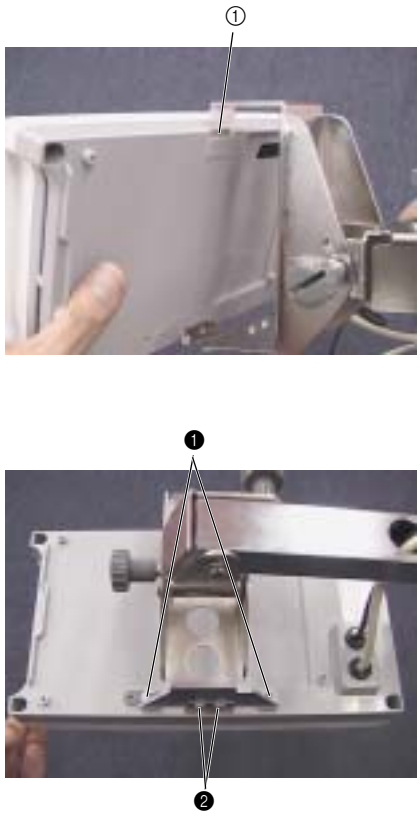

❶	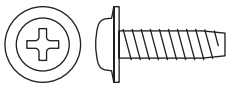	Taptite, Cup B M4X14 Color; Silver	Torque 0.78 – 1.18 N-m
❷	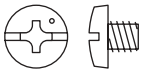	Screw, Bind M4X4 Color; Silver	Torque 1.18 – 1.57 N-m

www.promelectroavtomat.ru

9 FD assembly (Step 1)

1. Connect the FFC (SML2CD-FDD) ① to the FD unit (FDDFD-05HG-5661), and then lock the connector.

   ***Key point**
   - Connect the FFC (SML2CD-FDD) so that the silver terminal surface is on the FD unit side.

2. Attach the FD unit (FDDFD-05HG-5661) to FD case A, and then tighten the 4 screws ❶.
3. Attach the FD PCB assembly to FD case A with the 3 screws ❷, connect the FFC (SML2CD-FDD), and then lock the connector.

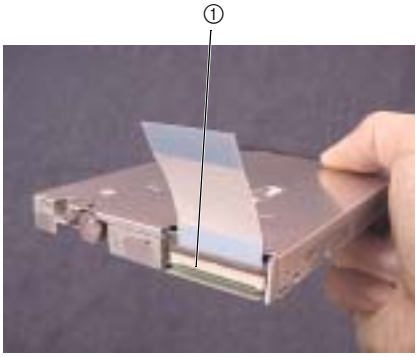

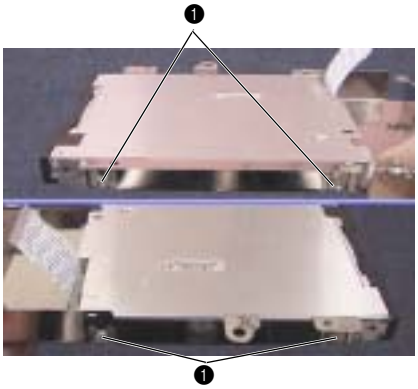

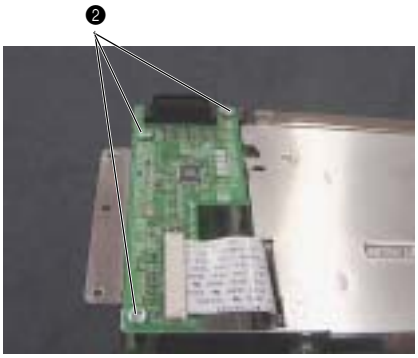

❶		Screw, Bind M2.6X3 Color; Silver	Torque 0.59 – 0.78 N-m
❷		Screw, Bind M3X6 Color; Silver	Torque 0.78 – 1.18 N-m

Assembly

www.promelectroavtomat.ru

10 FD assembly (Step 2)

1. Attach gasket D ① and gasket E ② to FD case B.
2. Insert the lug on FD case B ③ to the hole on FD case A to attach FD case B to FD case A, and then tighten the 3 screws ❶.
3. Attach the FD case assembly to the FD cover, and then tighten the 3 screws ❷.

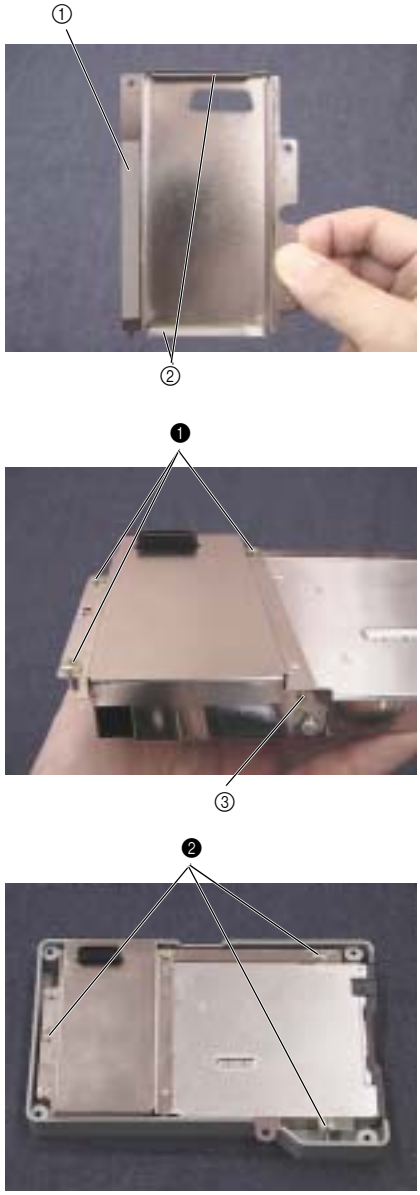

❶ ❷	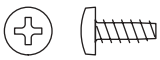	Taptite, Bind B M3X8 Color; Gold	Torque 0.39 – 0.78 N-m

www.promelectroavtomat.ru

11 FD assembly attachment

1. Attach the FD assembly to the operation panel assembly, aligning the FD assembly's connector with the operation panel assembly's connector.
2. Tighten the 4 screws ❶ and the screw ❷.

❶	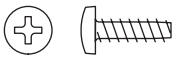	Taptite, Bind B M3X10 Color; Gold	Torque 0.39 – 0.78 N-m
❷	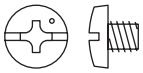	Screw, Bind M4X4 Color; Silver	Torque 1.18 – 1.57 N-m

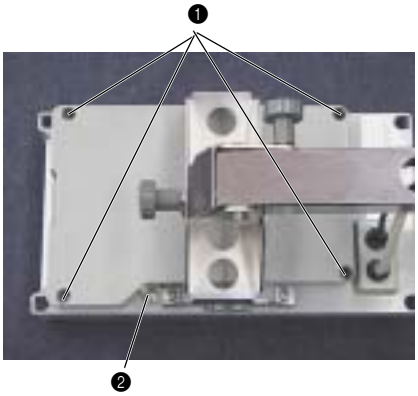

Assembly

www.promelectroavtomat.ru

Thread tension unit

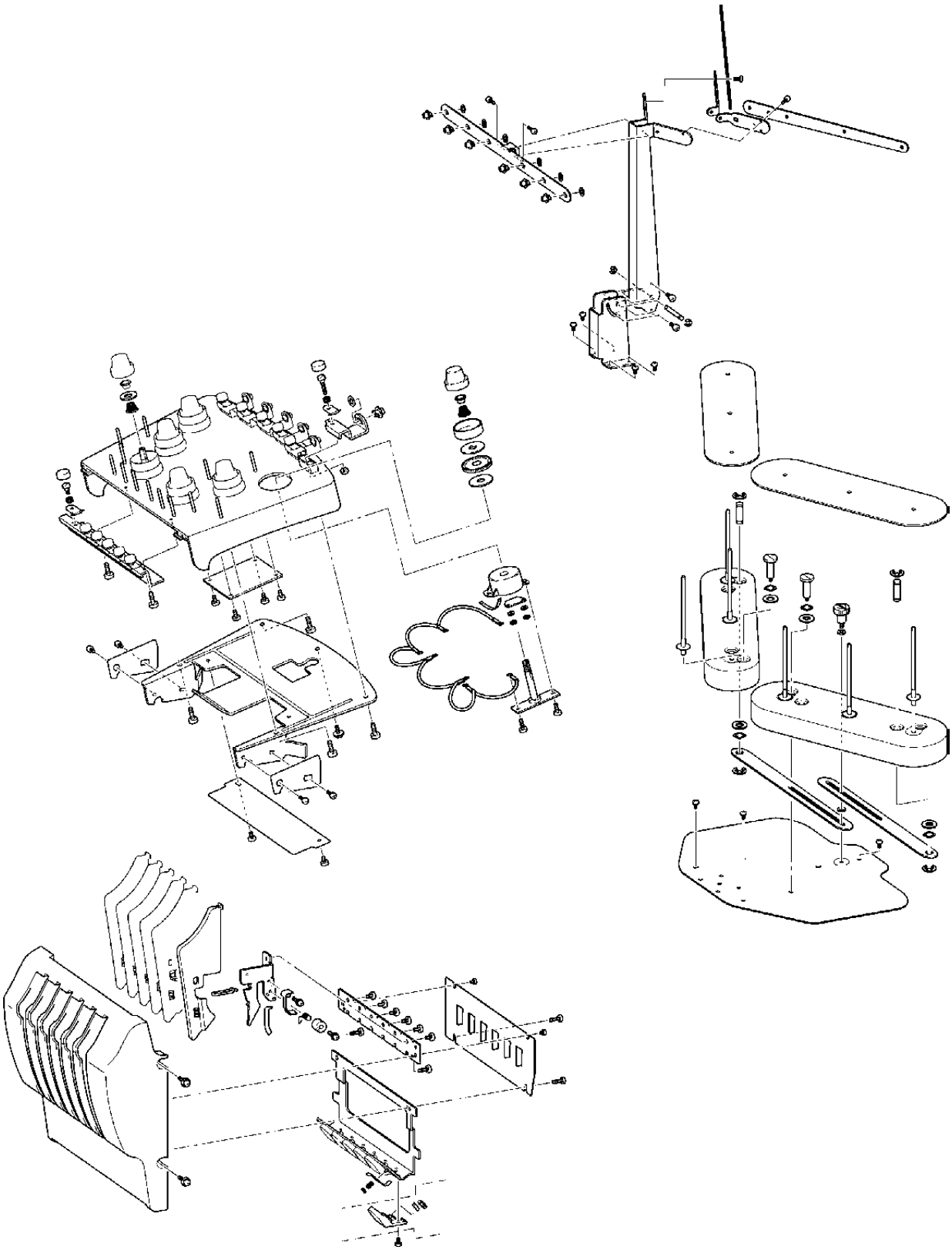

www.promelectroavtomat.ru

1 Thread take-up bracket assembly

***Key point**
- Make 6 thread take-up bracket assemblies.

1. Attach the spring S49 to the thread catching spring case ①.

***Key point**
- There are 4 holes on the spring case. Insert the tip of the spring S49 into the hole indicated by the arrow in the figure.

2. Attach the thread catching spring case assembly to the thread take-up bracket with the screw ❶.

***Key point**
- Align the protrusion on the thread catching spring case assembly with the hole on the thread take-up bracket, and turn them counterclockwise until they stop. Then tighten the screw ❶.

3. Attach the thread guide wire ② and the thread guard ③ to the thread take-up bracket with the screw ❷.

***Key point**
- Check that the spring S49 does not extend beyond line A.

Start movie clip (CD-ROM version only)

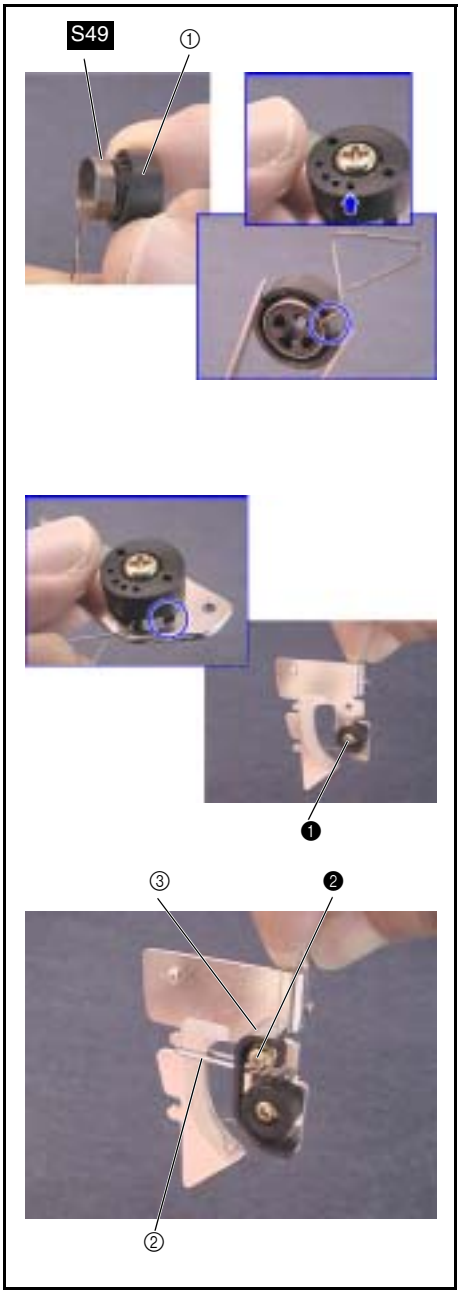

❶ ❷	Screw, Pan (S/P washer) M3X6DA Color; Gold	Torque 0.59 – 0.78 N-m
S49	20.8, ø8.5	THREAD TAKE-UP SPRING XC5926***

Assembly

2 Thread take-up lever cover assembly (Step 1)

1. Attach the thread take-up bracket assembly ② to the thread guide cover ①. (6 sets)
2. Attach the 6 thread guide cover assemblies ③ to the thread tension bracket base ④ with the 6 screws ❶.
3. Secure the thread tension bracket base assembly to the thread take-up lever cover ⑤ with the 2 screws ❷.

***Key point**

- Attach the thread tension bracket base assembly so that the clearance in each slot is equal when viewed from the front of the assembly.

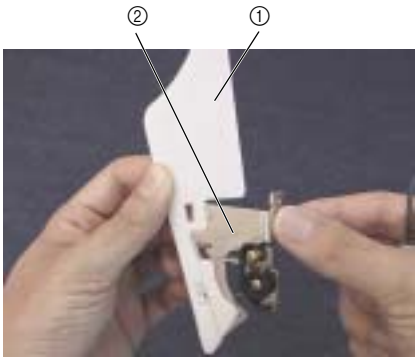

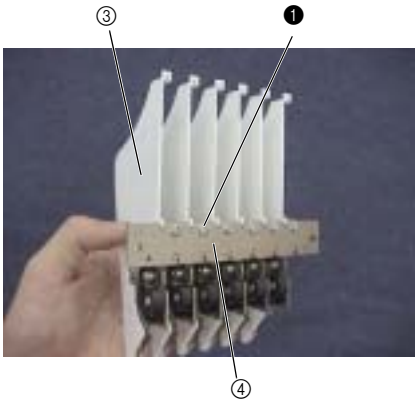

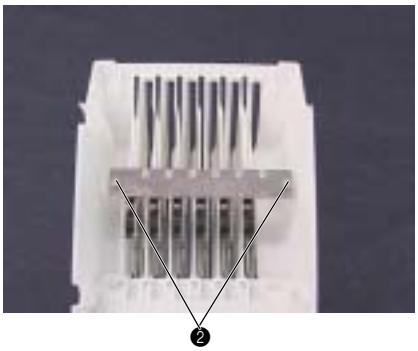

❶		Screw, Bind M3X4 Color; Silver	Torque 0.59 – 0.78 N-m
❷		Taptite, Bind B M3X10 Color; Gold	Torque 0.38 – 0.78 N-m

www.promelectroavtomat.ru

3 Thread take-up lever cover assembly (Step 2)

1. Attach the 6 needle thread presser plates ② and the 6 springs S50 to the thread holder base ①, and then attach the 6 retaining rings E1.5.
2. Attach the NT lower thread cutter to the cutter cover ③, and then attach the 6 retaining rings CS5
3. Attach the cutter cover assembly to the needle thread presser plates with the screw ❶. (6 locations)
4. Temporarily secure the thread holder base to the thread take-up lever cover with the 2 screws ❷.
5. Attach the rear cover ④ with the 4 screws (③ ④, 2 each).

***Key point**

- Lift the rear cover ④ and secure it.

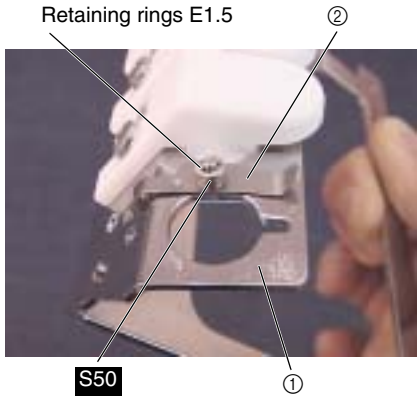

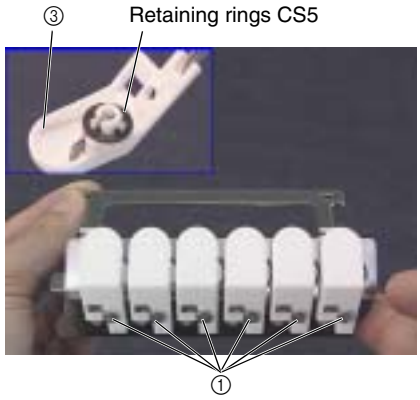

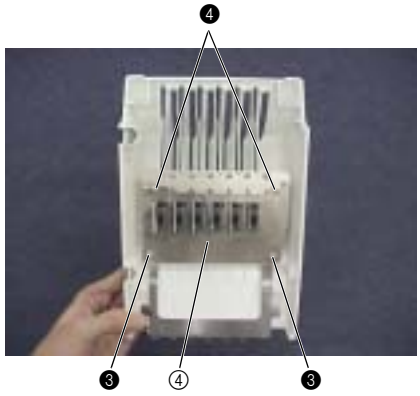

❶		Screw, Pan M3X4 Color; Silver	Torque 1.47 – 1.96 N-m
❷ ❸		Taptite, Bind B M3X10 Color; Gold	Torque 0.39 – 0.78 N-m
❹		Screw, Bind M2.6X3 Color; Silver	Torque 0.39 – 0.78 N-m
S50	5.5 ⌀3.4		SPRING XC5962***

Assembly

www.promelectroavtomat.ru

4 Spool stand frame assembly (Step 1)

1. Attach the retaining ring E8 to the spool stand stud ①. (2 sets)
2. Attach the spool stand stud to spool stand frame R ②, attach the plain washer (S10) ③, spring washer ④, and spool stand link ⑤ to the tip of the spool stand stud, and then attach the retaining ring E8
3. Attach the spool stand stud to spool stand frame L ⑥, attach the plain washer (S10) ③, spring washer ④, and spool stand link ⑤ to the tip of the spool stand stud, and then attach the retaining ring E8.

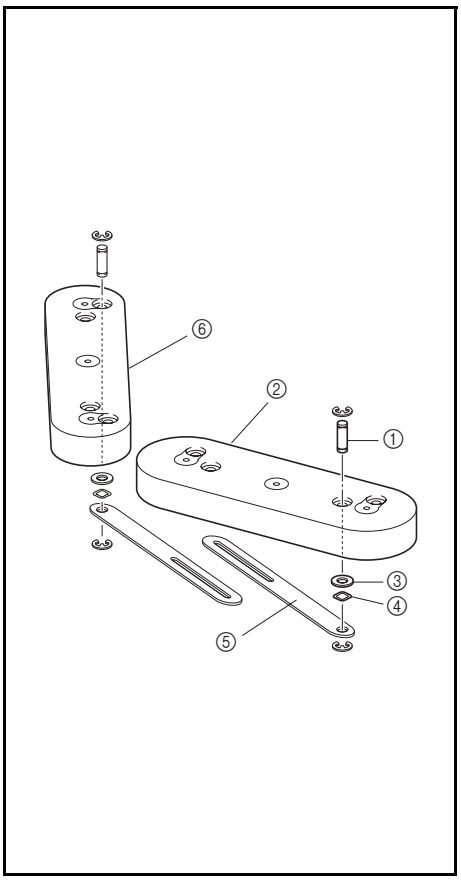

5 Spool stand frame assembly (Step 2)

1. Attach spool stand frames L and R to the spool stand base with the 2 stud screws ①, 2 spring washers ②, and 2 plain washers (S10) ③.
2. Put spool stand link R ④, the washer ⑤, spool stand link L ⑥, and the other washer ⑤ together, and then attach them to the spool stand base with the thumb bolt (M4L) ⑦.
3. Attach the 6 spool pins ⑧ and the 2 sponges ⑨ to spool frame stands R and L.

Tightening torque of stud screw	1.18 - 1.57 N-m

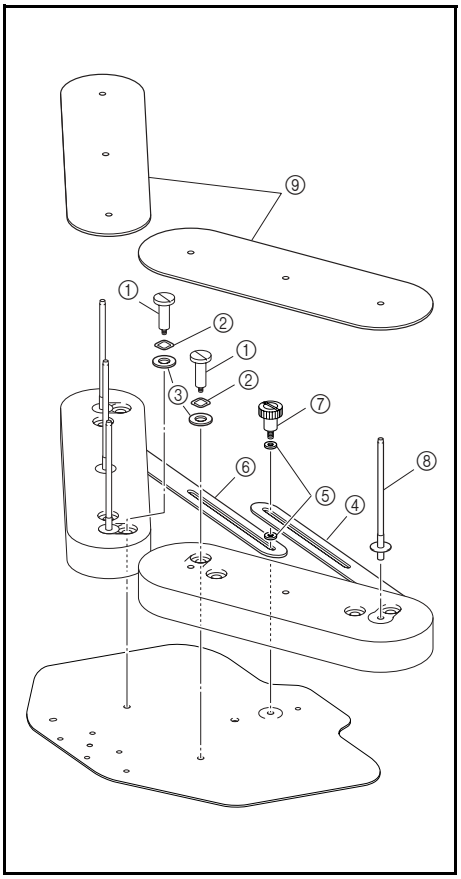

www.promelectroavtomat.ru

6 Antenna assembly (Step 1)

1. Attach the retaining ring E5 to the antenna shaft ①.
2. Attach the antenna C assembly ③ to antenna D ②, thread the antenna shaft assembly through them, and then attach the retaining ring E5
3. Secure the antenna C assembly with the screws (❶ ❷).

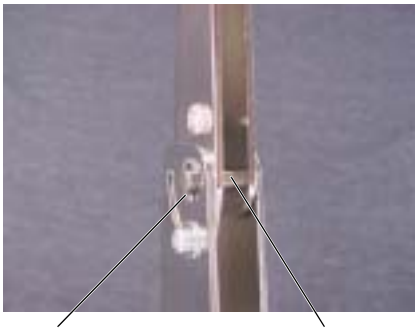

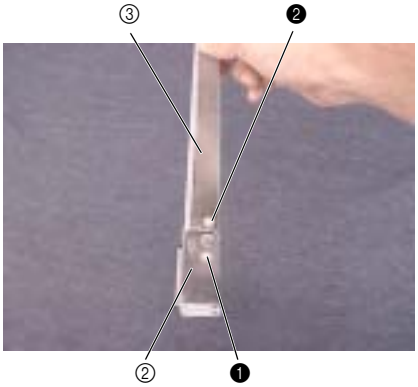

❶		Screw, Pan (S/P washer) M4X8DB Color; Silver	Torque 1.18 – 1.57 N-m
❷		Screw, Bind M4X6 Color; Silver	Torque 1.18 – 1.57 N-m

7 Antenna assembly (Step 2)

1. Attach pipe bush A ② to antenna E ①, and then attach the O-ring (P5) ③ to the tip of pipe bush A. (6 locations)

   ***Key point**
   - Turn pipe bush A 90 degrees after it has been attached to antenna E.

2. Attach the 2 antennas A ④, 2 antennas B ⑤, and the antenna E assembly to the antenna C assembly with the 4 screws ❶.

   ***Key point**
   - Tighten the antenna E assembly together with antenna A.

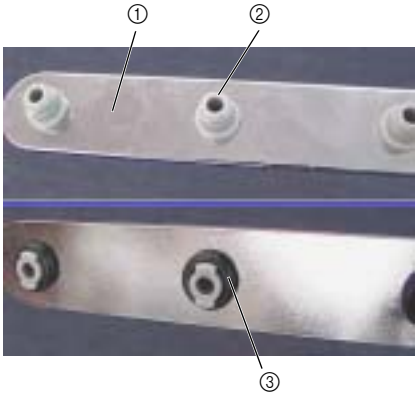

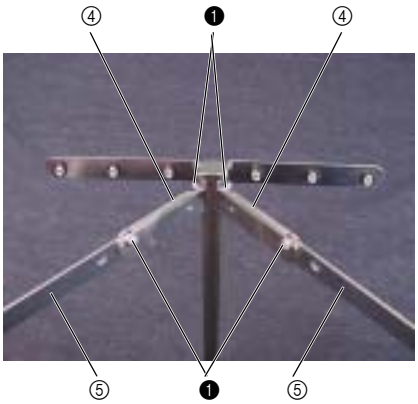

❶		Screw, Bind M3X6 Color; Silver	Torque 0.78 – 1.18 N-m

www.promelectroavtomat.ru

8 Antenna assembly attachment

1. Attach the antenna assembly to the thread stand base assembly with the 4 screws ❶.

Tightening torque of thread guide tension screw	0.59 – 0.78 N-m

❶	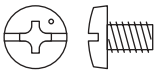	Screw, Bind M4X6 Color; Silver	Torque 1.18 – 1.57 N-m

9 Upper thread eyelet base attachment

1. Attach the upper thread eyelet base ① and the thread guide tension plate ② to the tension base assembly. (6 locations)
2. Thread the thread guide tension screw ③ through the spring S53 , attach the nut (2, M3) ④ from the rear side of the tension base assembly, and then tighten the thread guide tension screw. (6 locations)
3. Attach the tension axis cap ⑤ to the thread guide tension screw. (6 locations)

S53	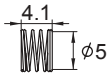	THREAD GUIDE COMPRESSION XC6231***

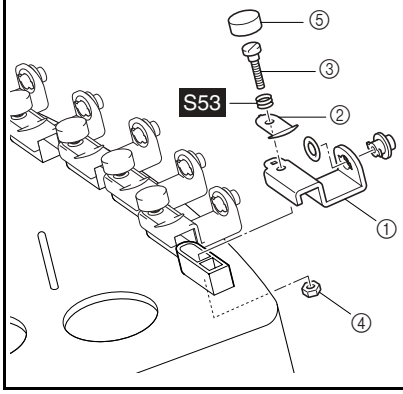

www.promelectroavtomat.ru

10 Thread sensor PCB assembly and head PCB assembly attachment

1. Connect the FFC (SML2CD-H) ② to the thread sensor assembly ①. (6 locations)

   ***Key point**
   - Connect the FFC (SML2CD-H) so that the blue surface is facing the thicker portion of the thread sensor assembly's connector.

2. Attach the thread sensor assembly and the 2 rubber washers to the thread quantity sensor cover ③, and then attach the 2 retaining rings CS2. (6 sets)
3. Attach the thread tension bracket assembly ④, thread quantity sensor cover assembly ⑤, and head grounding wire assembly ⑥ to the tension base assembly with the 2 screws ❶. (6 locations)

   ***Key point**
   - ighten the head grounding wire assembly together with the thread tension bracket assembly. (6 locations)

4. Attach the head PCB assembly ⑦ to the tension base assembly with the 4 screws ❷, and then connect the 6 FFCs (SML2CD-H) to the head PCB assembly.

   ***Key point**
   - Connect the FFC (SML2CD-H) so that the blue surface is facing the thicker side of the head PCB assembly's connector.

Start movie clip (CD-ROM version only)

❶		Taptite, Bind B M3X8 Color; Gold	Torque 0.39 – 0.78 N-m
❷		Taptite, Bind B M3X6 Color; Gold	Torque 0.39 – 0.78 N-m

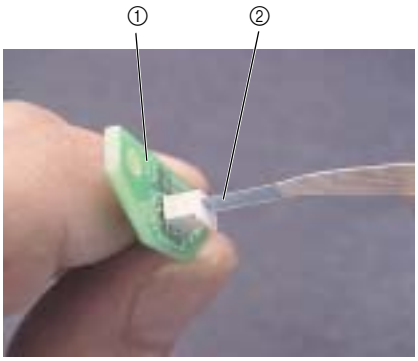

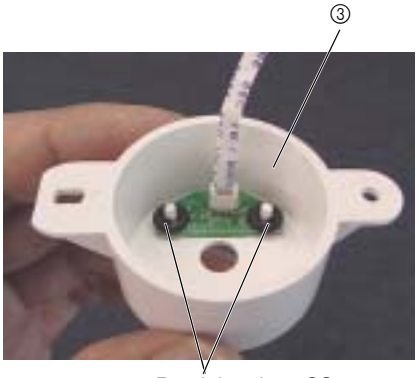

Retaining rings CS2

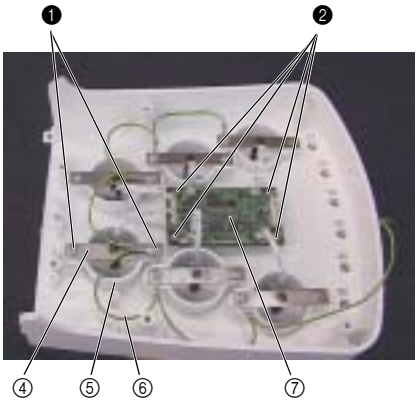

www.promelectroavtomat.ru

11 Inner thread eyelet base attachment

1. Attach the thread guide tension plate ② to the inner thread eyelet base ①. (6 locations)
2. Thread the thread guide tension axis ③ through the spring S52 , and then secure the guide tension axis to the inner thread eyelet base with the screw. (6 locations)
3. Attach the tension axis cap ④ to the thread guide tension axis. (6 locations)
4. Attach the inner thread eyelet base assembly from the tension base assembly with the 2 screws ❶.

Tightening torque of thread guide tension axis	0.59 - 0.78 N-m

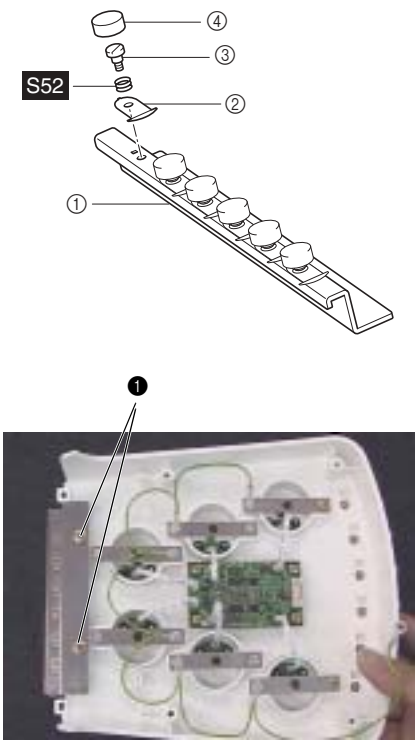

❶		Taptite, Bind B M3X8 Color; Gold	Torque 0.39 – 0.78 N-m
S52	4.3 ø5	BOBBIN WINDER GUIDE COMPRESSION X56456***	

12 Tension base bracket attachment

1. Attach the tension base bracket to the tension base assembly with the 4 screws ❶.
2. Attach the bracket cover ① to the tension base bracket with the 2 screws ❷.
3. Attach the head grounding wire ② to the tension base assembly with the screw ❸.

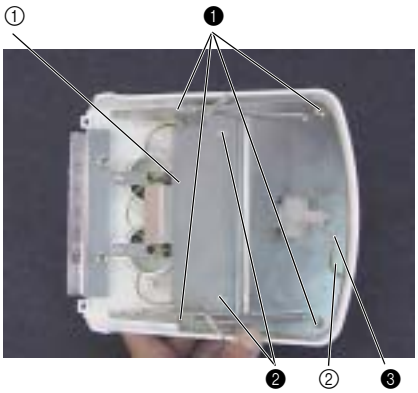

❶		Taptite, Bind B M4X8 Color; Gold	Torque 0.78 – 1.18 N-m
❷		Screw, Bind M3X4 Color; Silver	Torque 0.78 – 1.18 N-m
❸		Screw, Pan (S/P washer) M3X6 Color; Silver	Torque 0.59 – 0.78 N-m

www.promelectroavtomat.ru

13 Tension base lead wire assembly attachment

1. Connect the tension base lead wire assembly ① to the head PCB assembly.
2. Attach the cord bush (KR51) ② to the tension base lead wire assembly, and then push it into the groove ③ on the tension base bracket.

Start movie clip (CD-ROM version only)

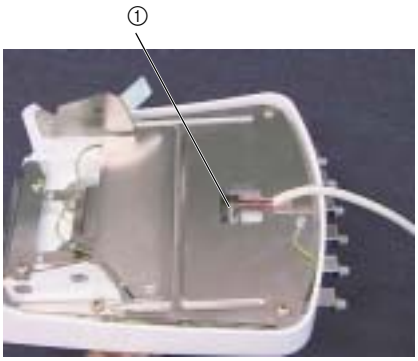

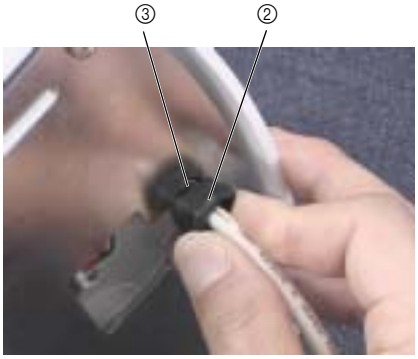

14 Tension nut attachment

1. Attach the tension disc felt ①, rotary disc assembly ②, tension disc felt ①, tension disc presser ③, spring S51 , washer ④, and tension nut ⑤. (6 locations)

NOTE

- Insert the thread tension washer ⑥ between the spring S51 and the washer ④ only for thread tension A.

***Key point**

- Attach the rotary disc assembly so that the magnetic surface is facing down.
- Attach the spring S51 so that the larger diameter end is at the bottom.
- Tighten the tension nut ⑤ two turns clockwise.

Start movie clip (CD-ROM version only)

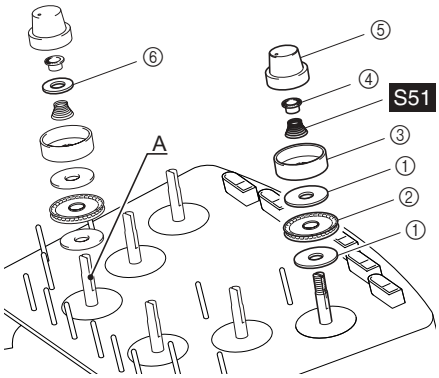

S51	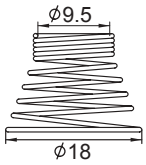	THREAD SPRING XC6232***

www.promelectroavtomat.ru

Thread cut unit

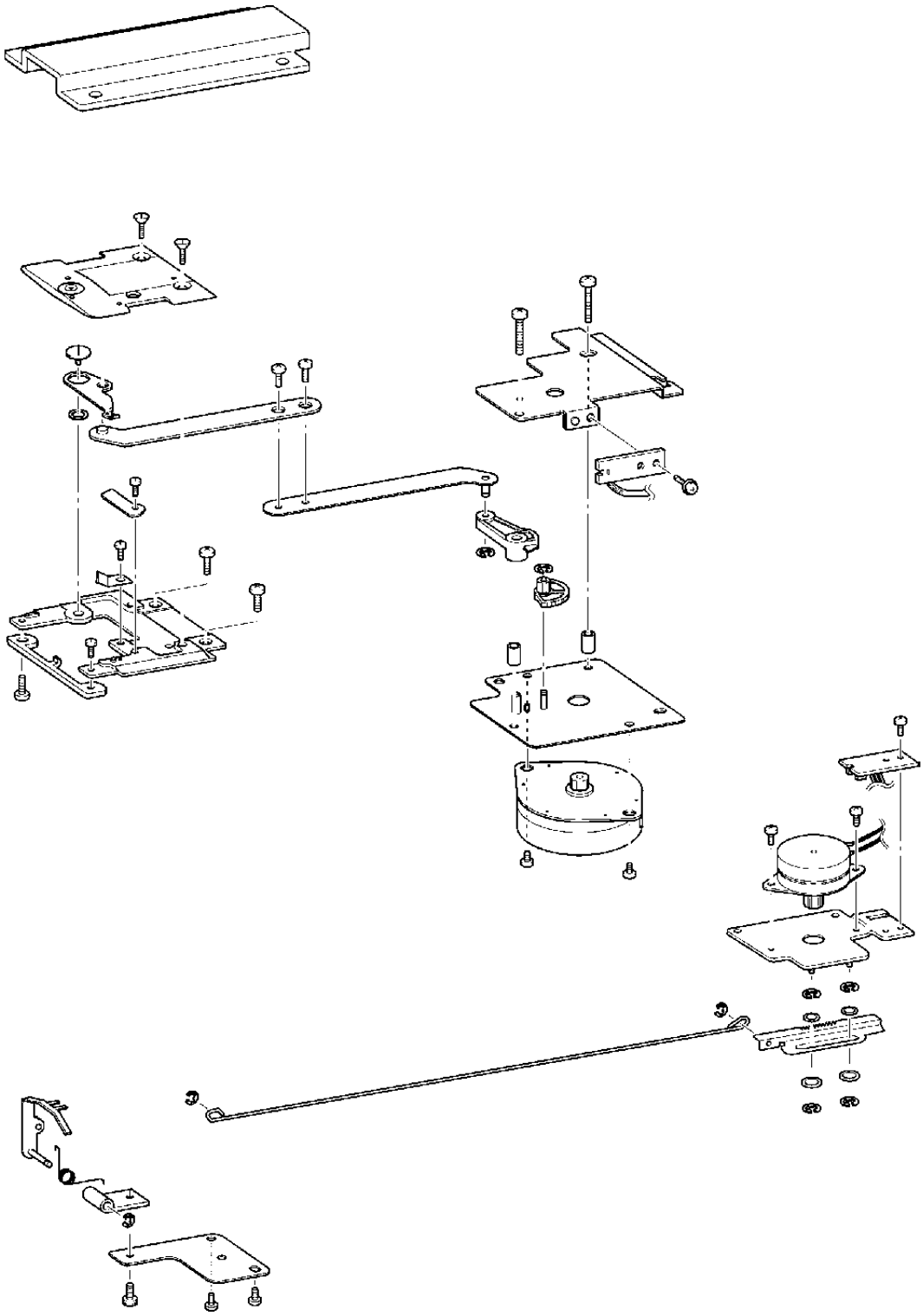

www.promelectroavtomat.ru

1 Cutter unit assembly (Step 1)

1. Apply MOLYKOTE EM-30L grease to the CT motor bracket assembly's shaft ①.
2. Attach the thread cutter motor assembly ② to the CT motor bracket assembly with the 2 screws ❶.
3. Attach the initial gear ③ to the motor bracket assembly's shaft, and then attach the retaining ring E2.
4. Attach the lever gear ④ to the motor bracket assembly's shaft, and then apply MOLYKOTE EM-30L grease to the gear.

***Key point**

- Align the marking ⑤ on the lever gear with the marking on the initial gear.

Start movie clip (CD-ROM version only)

Apply MOLYKOTE EM-30L grease to the CT motor bracket assembly's shaft.	Size of a grain of rice
Apply MOLYKOTE EM-30L grease to the lever gear.	Size of a grain of rice

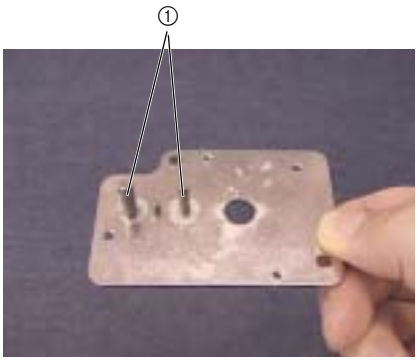

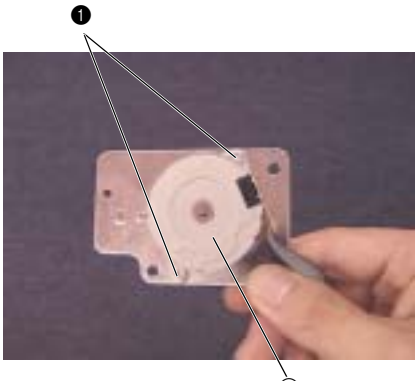

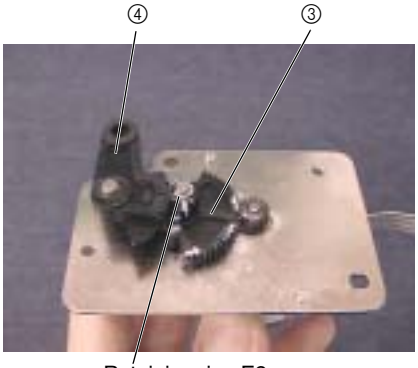

Retaining ring E2

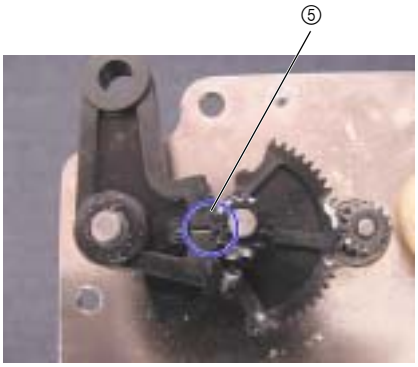

❶	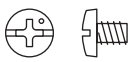	Screw, Bind M3X4 Color; Silver	Torque 0.78 – 1.18 N-m

www.promelectroavtomat.ru

2 Cutter unit assembly (Step 2)

1. Attach the cutter bracket assembly and the 2 collars ① to the CT motor bracket assembly with the 2 screws ❶.
2. Attach the thread cutter sensor assembly (white) ② to the CT motor bracket assembly with the screw ❷.
3. Apply MOLYKOTE EM-30L grease to the level link assembly's shaft ③.
4. Attach the lever link assembly ④ to the lever gear, and then attach the retaining ring E2.

Start movie clip (CD-ROM version only)

Apply MOLYKOTE EM-30L grease to the lever link assembly's shaft.	Size of a grain of rice

❶	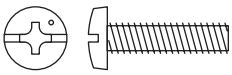	Screw, Bind M4X16 Color; Silver	Torque 1.18 – 1.57 N-m
❷		Screw, Pan (S/P washer) M3X6 Color; Silver	Torque 0.57 – 0.78 N-m

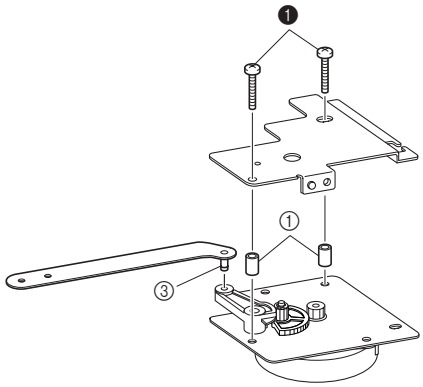

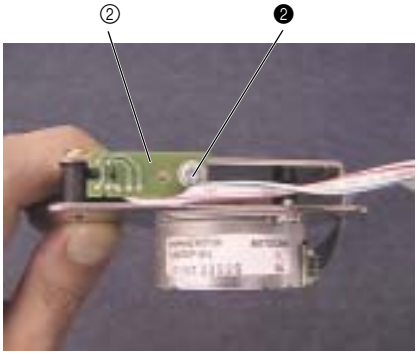

www.promelectroavtomat.ru

3 Picker assembly

1. Attach the picker motor assembly ① to the PK motor bracket assembly with the 2 screws ❶.
2. Attach the 2 retaining rings E2 to the PK motor bracket's shaft ② (2 locations).
3. Apply MOLYKOTE EM-30L grease to the rack assembly's moving surface ③ and the gear ④.
4. Attach the 2 plain washers (S3), rack assembly ⑤, and 2 plain washers (S3) to the PK motor bracket assembly's shaft (2 locations), and then attach the 2 retaining rings E2.
5. Attach the picker sensor assembly to the PK motor bracket assembly with the screw ❷.
6. Place the washer and the picker link's slot ⑥ on the rack assembly's shaft, and then attach the retaining ring E2.
7. Paint the picker motor assembly's connector black.

Apply MOLYKOTE EM-30L grease to the rack assembly's moving surface and the gear.	Size of a grain of rice

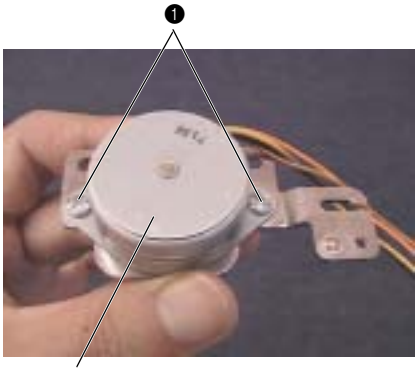

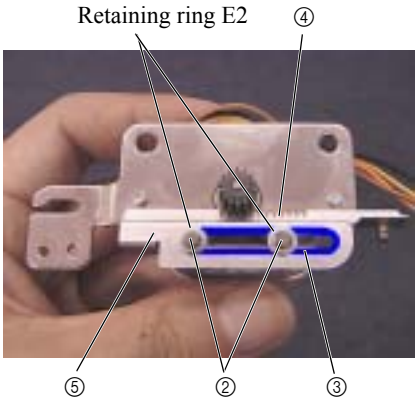

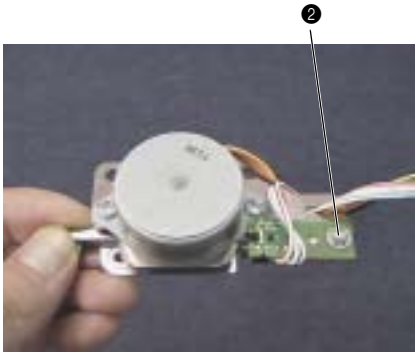

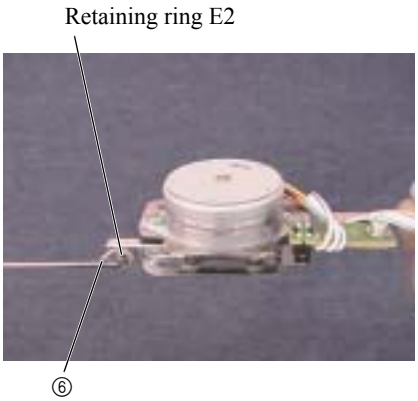

❶		Screw, Bind M3X4 Color; Silver	Torque 0.78 – 1.18 N-m
❷		Screw, Pan (S/P washer) M3X6 Color; Silver	Torque 0.59 – 0.78 N-m

www.promelectroavtomat.ru

Power unit

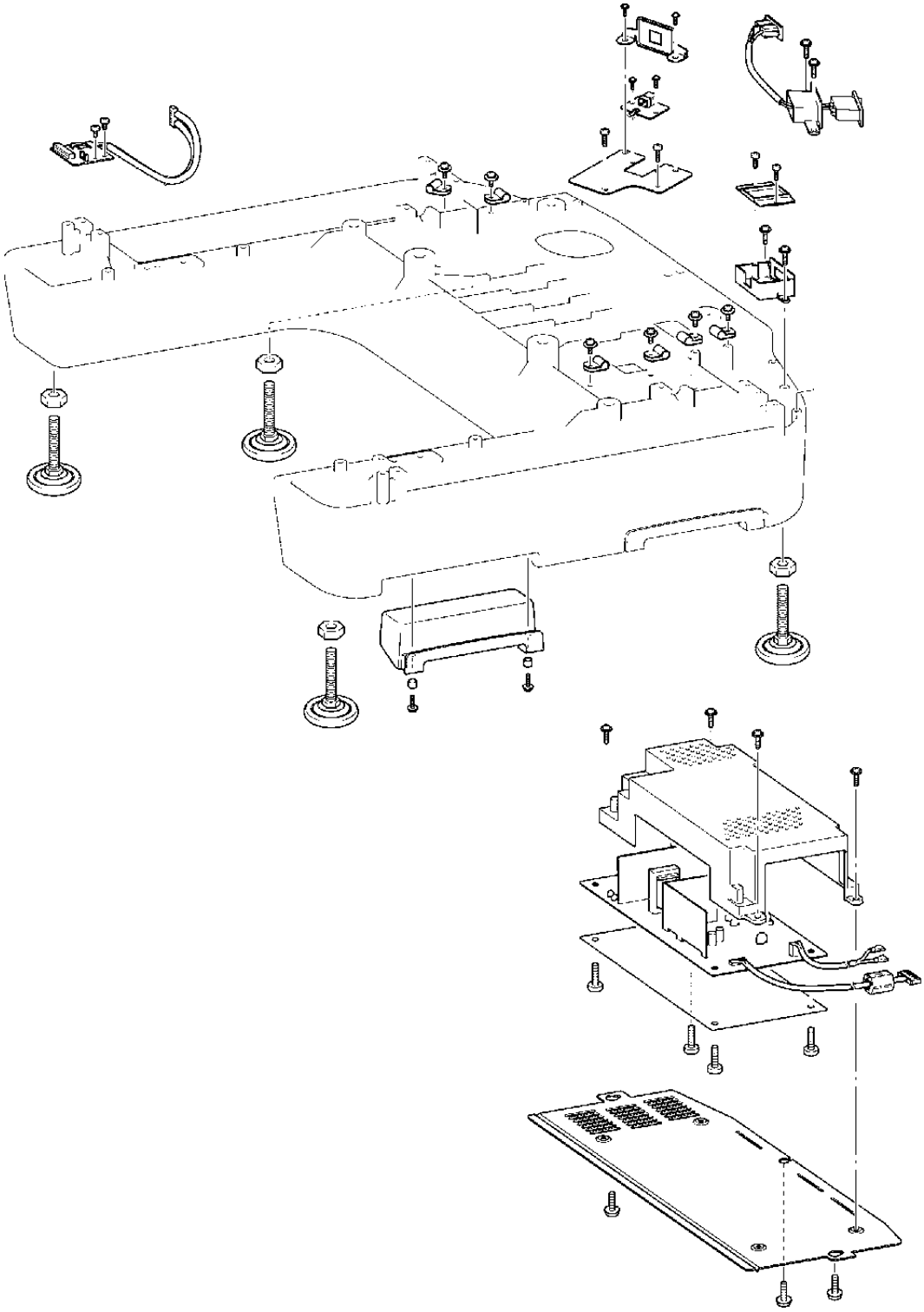

www.promelectroavtomat.ru

1 Adjust bolt attachment

1. Attach the 2 bushes ② to the handle ①. (4 locations)
2. Attach the handle to the base frame with the 2 screws ❶. (4 locations)
3. Attach the 4 nuts (2, M8) ④ to the 4 adjust bolts (M8) ③.

   ***Key point**
   - Lightly tighten the nut (2, M8) against the head of the adjust bolt (M8).
4. Attach the 4 adjust bolt assemblies to the base frame.

   ***Key point**
   - Lightly tighten the adjust bolt assembly ⑤ against the base frame.

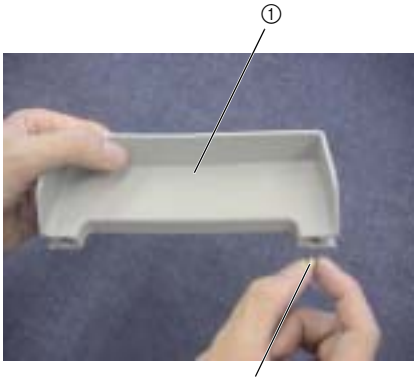

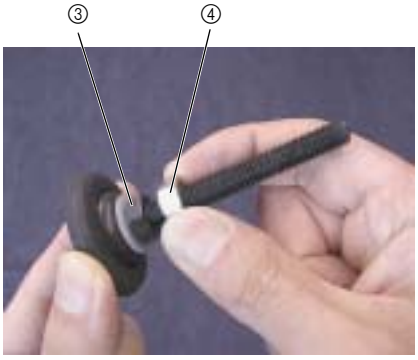

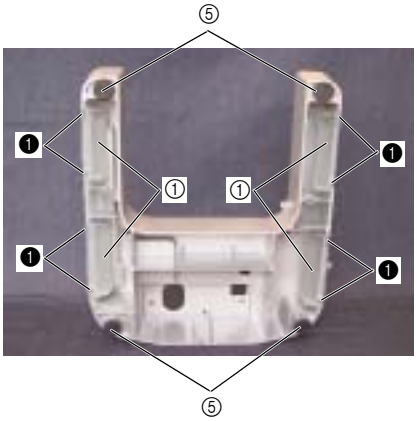

❶		Screw, Pan (S/P washer) M3X10 Color; Silver	Torque 0.00 – 0.00 N-m

Assembly

www.promelectroavtomat.ru

2 Power PCB assembly

1. Attach the power PCB assembly and the insulation sheet ② to the power unit cover ① with the 4 screws ❶.
2. Attach the power unit cover assembly to the power unit stay ③ with the 4 screws ❷.
3. Connect the power lead wire assembly ④ to the power PCB assembly.

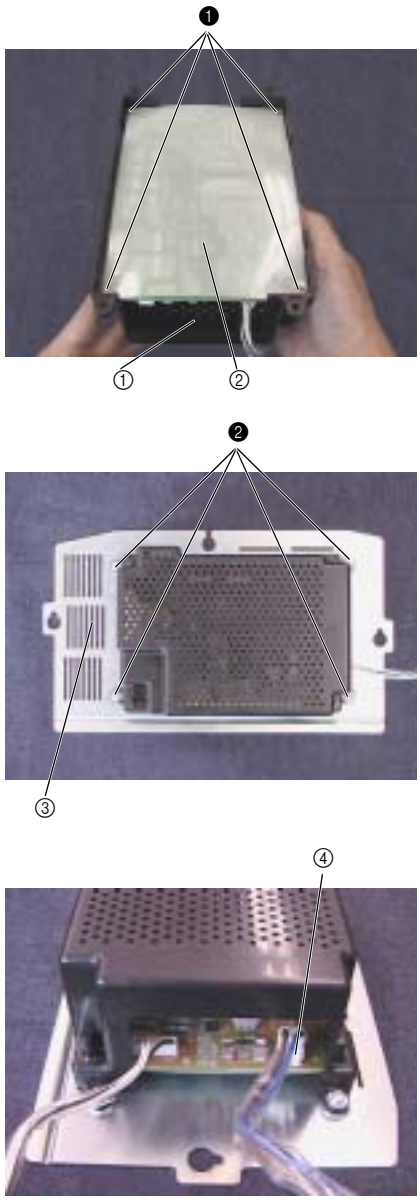

❶		Taptite, Bind B M3X8 Color; Gold	Torque 0.39 – 0.78 N-m
❷	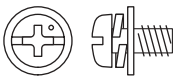	Screw, Pan (S/P washer) M4X8 Color; Silver	Torque 0.78 – 1.18 N-m

www.promelectroavtomat.ru

3 Power PCB assembly attachment

1. Temporarily tighten the 3 screws ❶ in the attachment holes on the PCB holder at the bottom of the base frame
2. Run the PCB holder final assembly's lead wire and the power supply's lead wire through the 2 cord holes ① on the base frame, and route them along the upper section of the base frame so that the PCB holder final assembly is aligned with the 3 screws ❶, and attach it to the base frame.
3. Firmly tighten the 3 screws ❶.

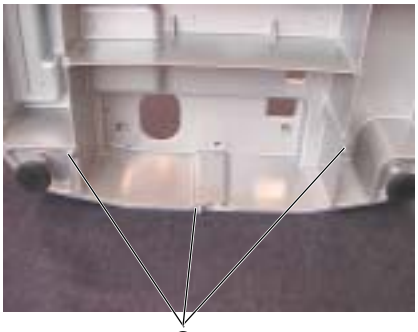

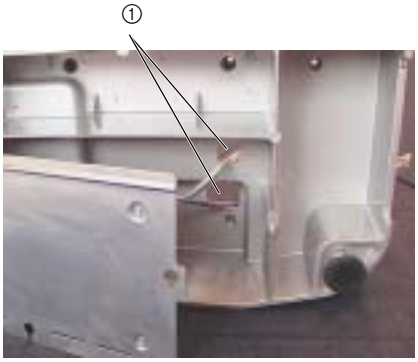

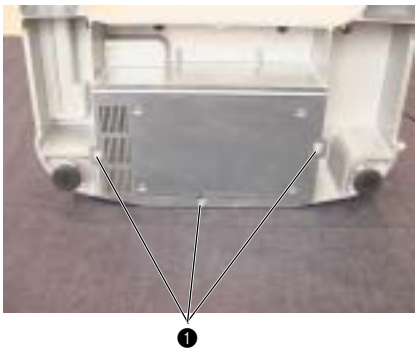

❶	Screw, Pan (S/P washer) M4X8DB Color; Silver	Torque 1.18 – 1.57 N-m

Assembly

www.promelectroavtomat.ru

4 USB PCB assembly and Y-area sensor assembly attachment

1. Attach the USB PCB assembly ② to the USB PCB holder ① with the 2 screws ❶.
2. Attach the USB PCB cover ③ to the USB PCB holder assembly with the 2 screws ❷.
3. Attach the USB PCB holder assembly to the base frame with the 2 screws ❸.
4. Attach the Y-area sensor assembly ④ to the base frame with the 2 screws ❹.
5. Attach the Y-area sensor's lead wire to the base frame with the screw ❺ and the cord clamp (NK-6N).
6. Attach the USB PCB assembly's lead wire and the Y-area sensor assembly's lead wire to the base frame with the screw ❻ and the cord clamp (NK-6N).

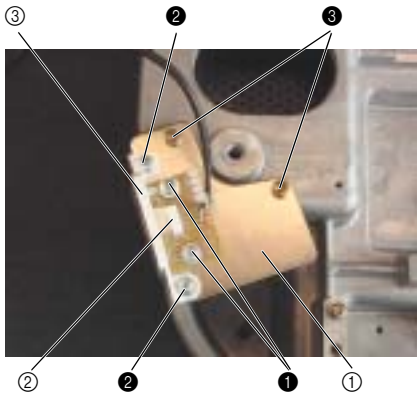

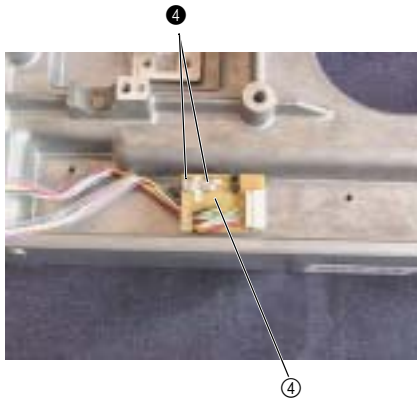

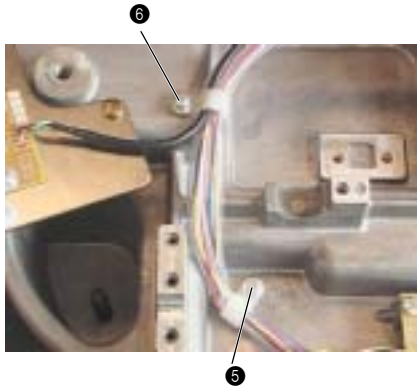

❶ ❷		Screw, Pan (S/P washer) M4X8DB Color; Silver	Torque 0.78 – 1.18 N-m
❸		Taptite, Bind S M4X10 Color; Gold	Torque 1.47 – 1.96 N-m
❹		Screw, Bind M4X6 Color; Silver	Torque 1.18 – 1.96 N-m
❺ ❻		Screw, Pan (S/P washer) M4X8DB Color; Silver	Torque 0.78 – 1.18 N-m

www.promelectroavtomat.ru

5 Power switch assembly and inlet attachment

1. Connect the free end of the 2 power lead wire assemblies ① (one end is connected to the power PCB assembly) to the power switch assembly ②.

   ***Key point**
   - Connect each of the power lead wires to the terminal adjacent to the rocker switch lead wire of the same color.
2. Attach the power switch assembly to the base frame with the 2 screws ❶.
3. Attach the inlet cover ③ to the base frame with the 2 screws ❷.
4. Place the power switch assembly's rocker switch ④ in the inlet cover (pay attention to the direction), and then attach the inlet cover lid with the 2 screws ❸.
5. Attach the power lead wire assembly to the base frame with the screw ❹ and the cord clamp (NK-6N).
6. Attach the USB lead wire assembly and the Y-area sensor assembly's lead wire to the base frame with the screw ❺ and the cord clamp (NK-6N).
7. Attach the power PCB assembly's lead wire to the base frame with the screw ❻ and the cord clamp (NK-6N).

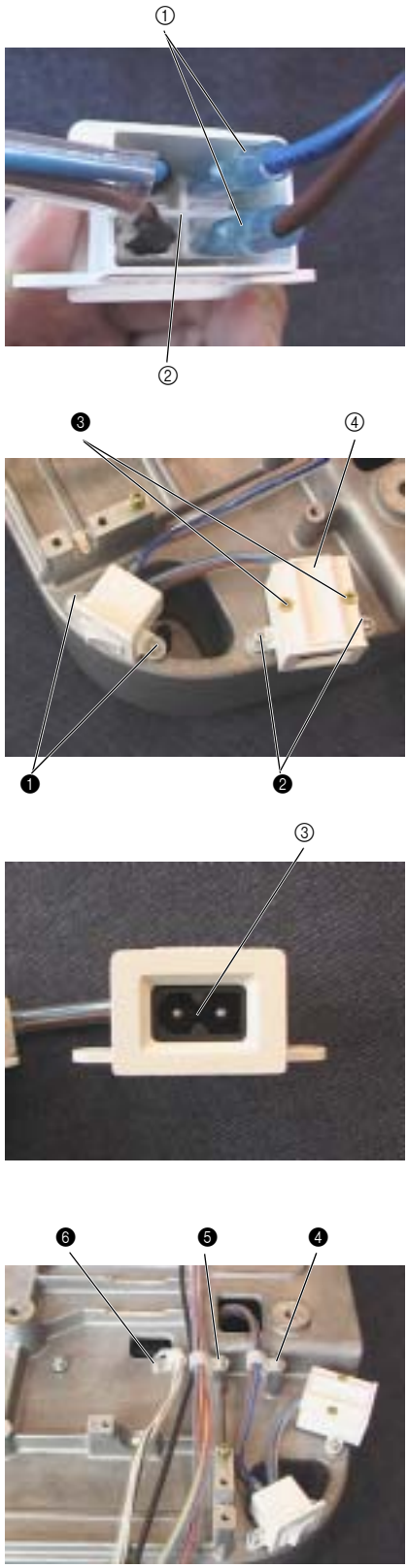

❶ ❷		Screw, Pan (S/P washer) M4X8DB Color; Silver	Torque 0.78 – 1.18 N-m
❸		Taptite, Bind B M3X8 Color; Gold	Torque 0.39 – 0.78 N-m
❹ ❺ ❻		Screw, Pan (S/P washer) M4X8DB Color; Silver	Torque 0.78 – 1.18 N-m

Assembly

www.promelectroavtomat.ru

Lower shaft unit

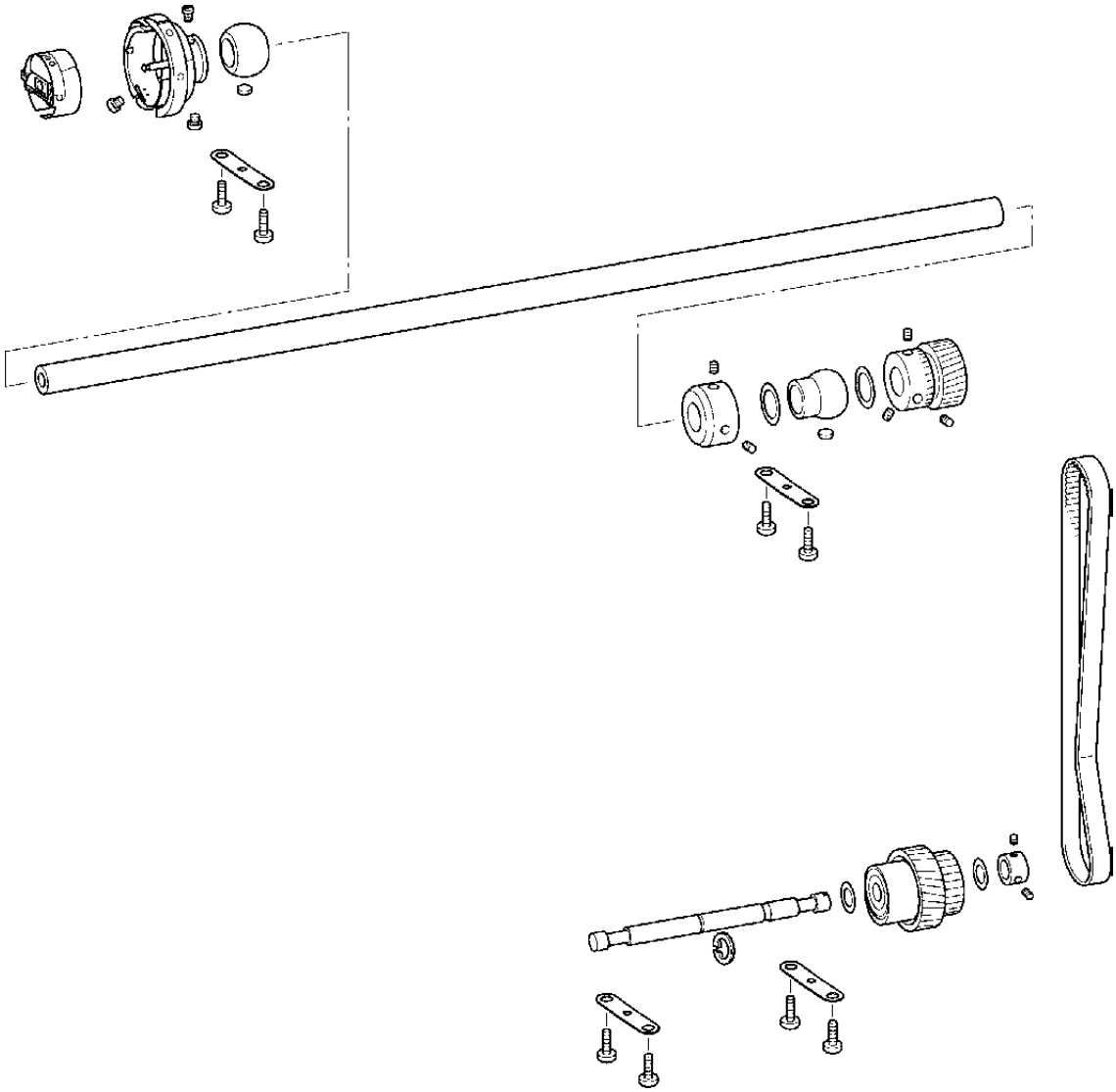

www.promelectroavtomat.ru

1 Lower shaft attachment

1. Apply turbine oil to the 2 felts ①.
2. Attach the felt to the lower shaft metal collars on the arm bed. (2 locations)
3. Thread the lower shaft gear ② through the lower shaft, align the lower shaft end face with the lower shaft gear end face, and tighten the 3 screws ❶.
4. Attach the lower shaft assembly, thrust washer (7.24), lower shaft metal R ③, thrust washer (7.24), collar ④, and lower shaft metal F.
5. Secure the 2 lower shaft metal pressers with the 4 screws ❷.
6. Move the lower shaft to the front and the collar to the rear, and then secure the collar with the 2 screws ❸.

Start movie clip (CD-ROM version only)

Apply turbine oil to the 2 felts.	Soak the felts in turbine oil.
Apply sewing-machine oil to the lower shaft metal.	1 to 2 drops

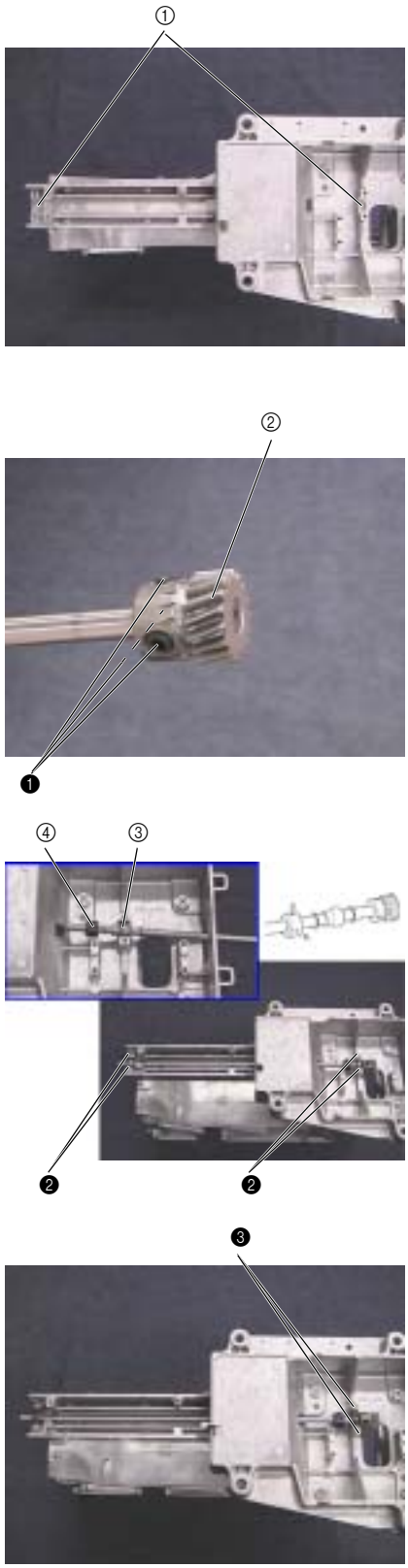

❶ ❸		Set Screw, Socket (CP) M6X6 Color; Black	Torque 1.18 – 1.57 N-m
❷	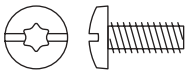	Taptite, Bind S M4X10 Color; Gold	Torque 1.47 – 1.96 N-m

Assembly

www.promelectroavtomat.ru

2 Idle pulley assembly

1. Apply MOLYKOTE EM-30L grease to the shaft hole ① on the idle pulley.
2. Attach the retaining ring E7 to the idle pulley shaft ②.
3. Attach the thrust washer ③, idle pulley ④, thrust washer ③, and set collar ⑤ to the idle pulley shaft.
4. Draw the set collar toward the idle pulley, and secure the set collar with the 2 screws ❶.

Start movie clip (CD-ROM version only)

Apply MOLYKOTE EM-30L grease to the shaft hole on the idle pulley.	Size of a grain of rice

❶		Set Screw, Socket (CP) M4X4 Color; Black	Torque 0.78 – 1.18 N-m

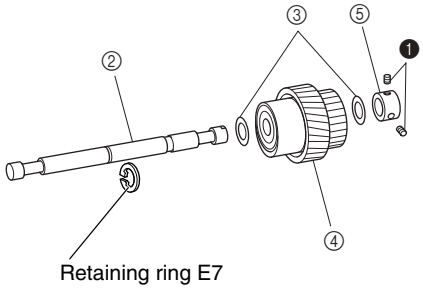

3 Idle pulley assembly attachment

1. Hang the T-belt (S5M-525) ② over the idle pulley assembly ①, and attach the idle pulley assembly's 2 lower shaft metals so that they are aligned with the lower shaft metal collars of the arm bed.
2. Attach the 2 bushing pressers and temporarily tighten them with 4 screws ❶.
3. Insert a flat screwdriver from the rear, rotate the idle pulley shaft, and adjust the backlash between the lower shaft gear and the idle pulley.
4. Firmly tighten the 4 screws ❶ securing the 2 bushing pressers.

   ***Key point**
   - Check that there is no backlash in the lower shaft.
5. Apply MOLYKOTE EM30L grease to the lower shaft gear.

Start movie clip (CD-ROM version only)

Backlash between lower shaft gear and idle pulley:	0.03 mm
Apply MOLYKOTE EM30L grease to the lower shaft gear.	Gear circumference

❶		Taptite, Bind S M4X10 Color; Gold	Torque 1.47 – 1.96 N-m

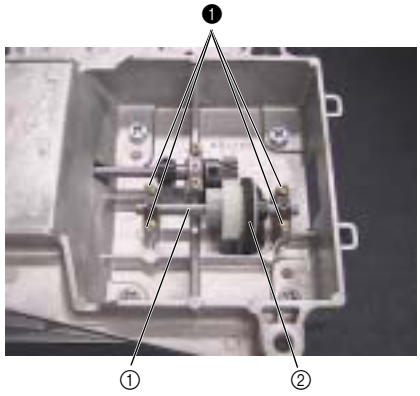

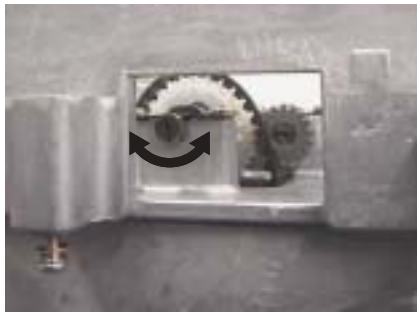

www.promelectroavtomat.ru

4 Connection of arm bed and base frame

1. Attach the arm bed ① to the base frame, and temporarily tighten the 4 screws ❶ and 4 plain washers M8.
2. Align the arm bed with the marking on the base frame, and firmly tighten the 4 screws ❶.

***Key point**

- Attach the arm bed so that it is parallel to the base frame.

Start movie clip (CD-ROM version only)

❶	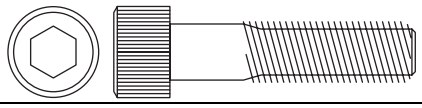	Torque 5.88 N-m

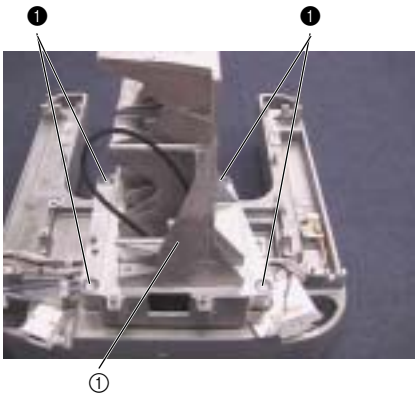

Assembly

Upper shaft unit

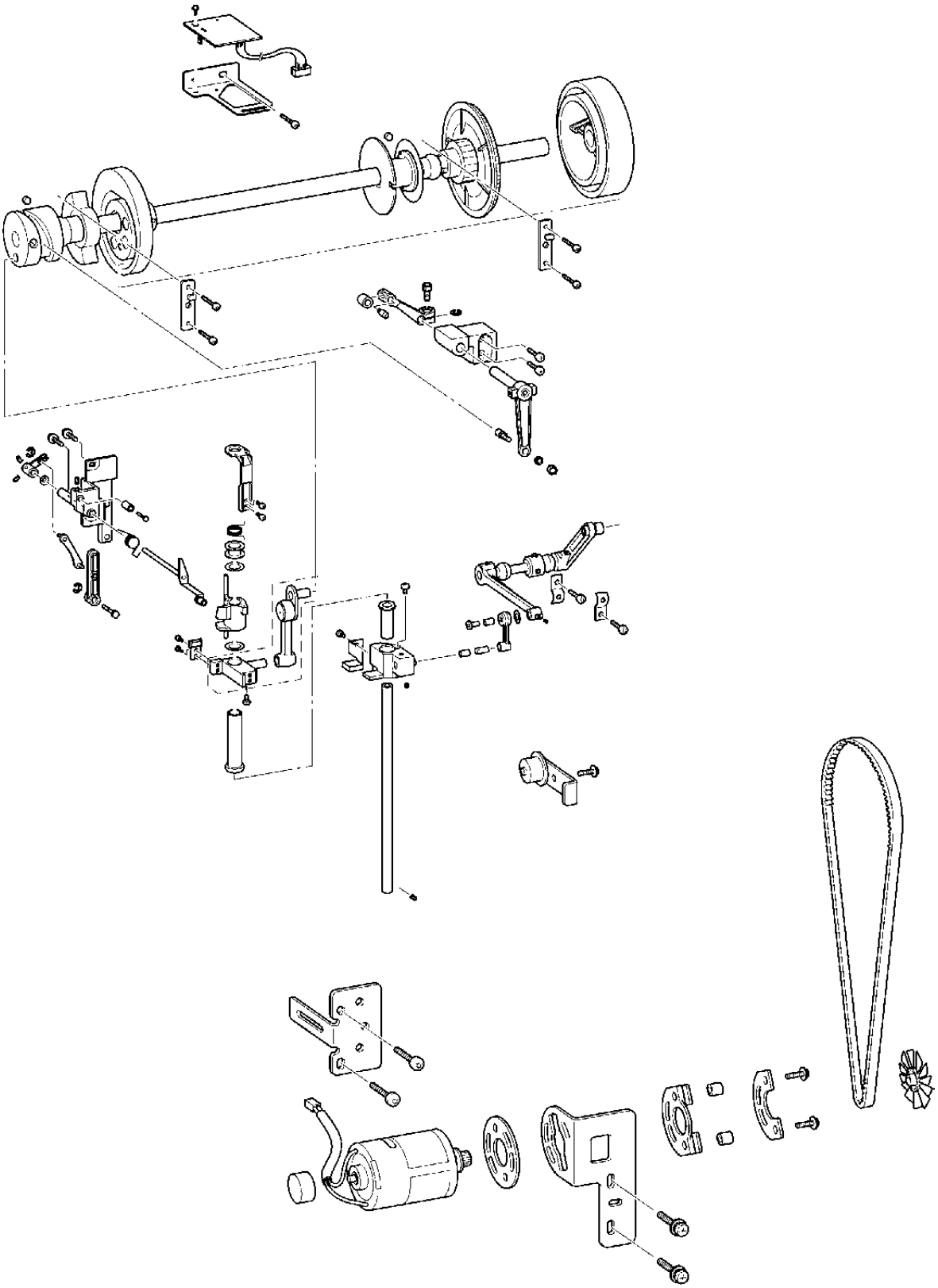

www.promelectroavtomat.ru

1 Upper shaft assembly attachment

1. Apply turbine oil to the 2 felts ①.
2. Attach the felts to the lower shaft metal collars on the arm bed. (2 locations)
3. Hang the T-belt (S5M-525) currently on the lower shaft over the timing pulley of the upper shaft final assembly ②. Align the upper shaft final assembly's 2 upper shaft metals with the upper shaft metal collars on the arm bed, and attach the upper shaft to the arm bed.

   ***Key point**
   - Be careful not to damage the encoder.
4. Secure the 2 metal pressers ③ with the 4 screws ❶.
5. Apply MOLYKOTE EM-30L grease to the groove on the presser foot cam and thread take-up cam.
6. Apply sewing-machine oil to the upper shaft metal ④.
7. Align the notch on the encoder base with the pulley's base line, and attach the pulley to the upper shaft assembly.

Start movie clip (CD-ROM version only)

Apply MOLYKOTE EM-30L grease to the groove on the presser foot cam and thread take-up cam.	Cam groove circumference
Apply sewing-machine oil to the upper shaft metal.	1 to 2 drops

❶	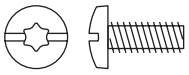	Taptite, Bind S M4X10 Color; Gold	Torque 1.47 – 1.96 N-m

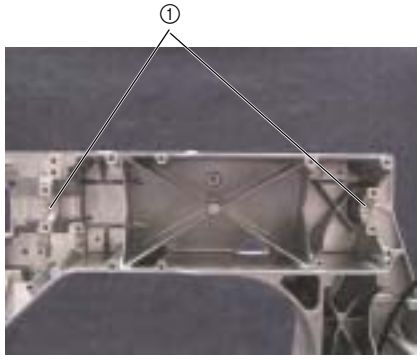

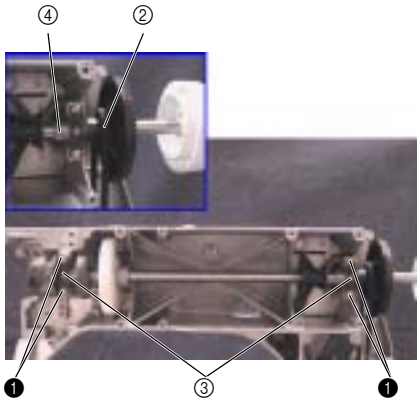

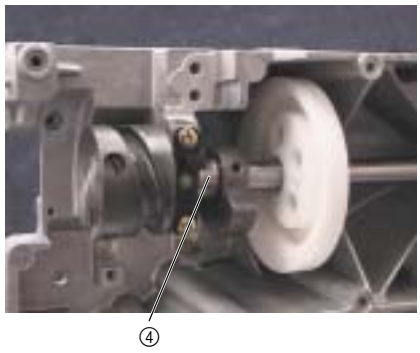

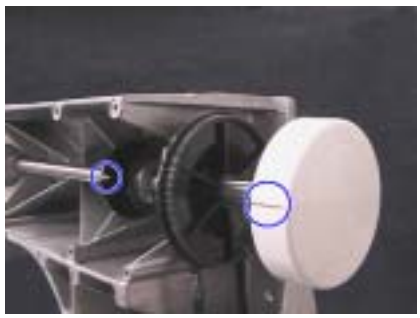

www.promelectroavtomat.ru

2 Presser foot driving shaft assembly

1. Attach the thrust washer and the presser foot lever shaft to the presser foot connecting rod ①.
2. Align the screw hole on the presser foot driving shaft assembly with the presser foot lever shaft's D-cut face ②, and secure the presser foot driving shaft assembly with the screw ❶.

Start movie clip (CD-ROM version only)

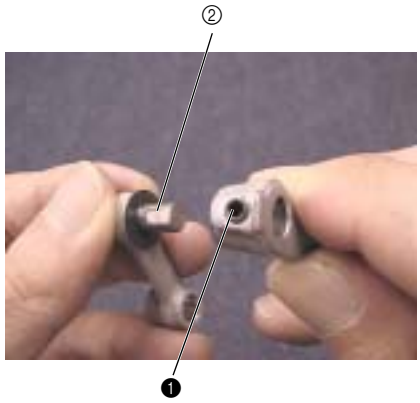

❶		Set Screw, Socket (CP) M4X4 Color; Black	Torque 0.78 – 1.18 N-m

www.promelectroavtomat.ru

3 Presser foot driving shaft assembly attachment

1. Apply turbine oil to the 2 felts ①.
2. Attach the felts to the lower shaft metal collars on the arm bed. (2 locations)
3. Align the presser foot driving shaft assembly's ② 2 lower shaft metals with the lower shaft metal collar on the arm bed, and then attach the presser foot driving shaft assembly to the arm bed.

   ***Key point**
   - Place the presser foot driving shaft assembly's roller ③ into the groove on the presser foot cam.
4. Secure the 2 bushing pressers with the 2 screws ❶.
5. Apply sewing-machine oil to the presser foot driving shaft assembly's metal ④.

Start movie clip (CD-ROM version only)

Apply sewing-machine oil to the presser foot driving shaft assembly's metal.	1 to 2 drops

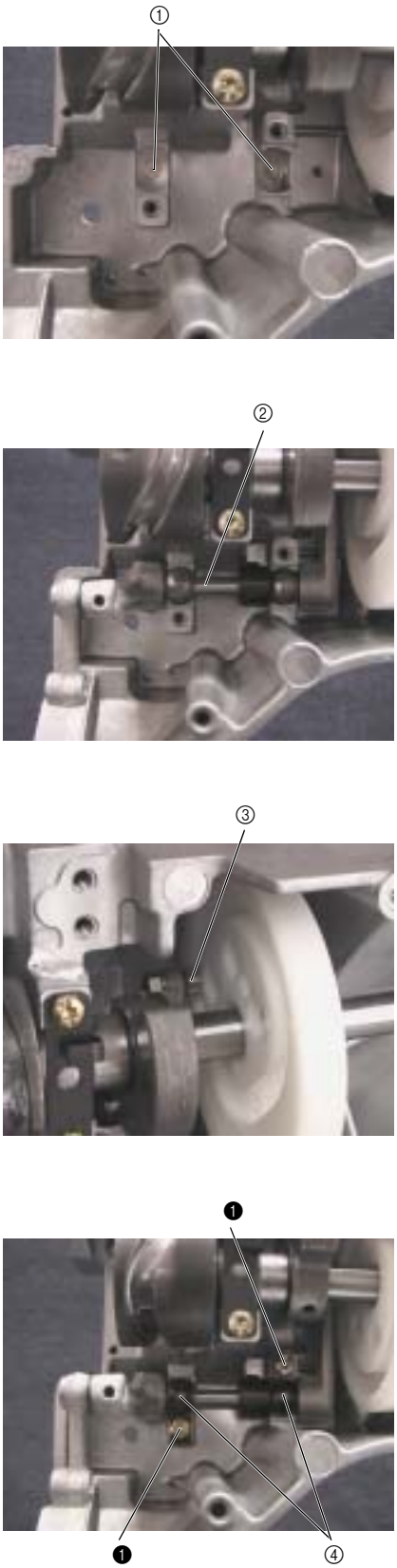

❶	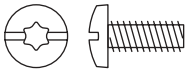	Taptite, Bind S M4X10 Color; Gold	Torque 1.47 – 1.96 N-m

Assembly

www.promelectroavtomat.ru

4 Crank rod assembly attachment

1. Attach the crank rod assembly ② to the thread take-up cam ①, and secure them with the 2 screws ❶.

   ***Key point**
   - Align the crank rod assembly's D cut face ③ with screw hole 1 ④.

2. Firmly tighten the screw ❷.

   ***Key point**
   - Screw ❷ is a left hand thread.

Start movie clip (CD-ROM version only)

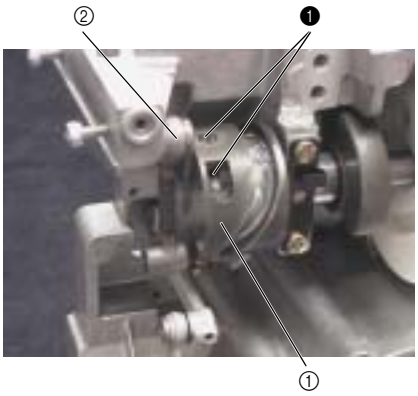

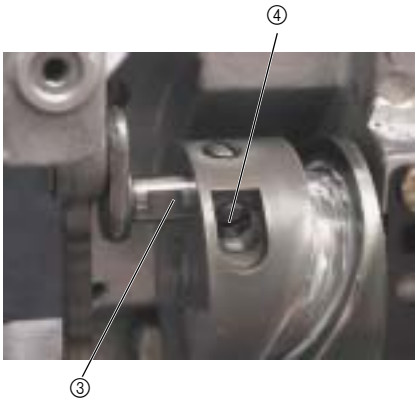

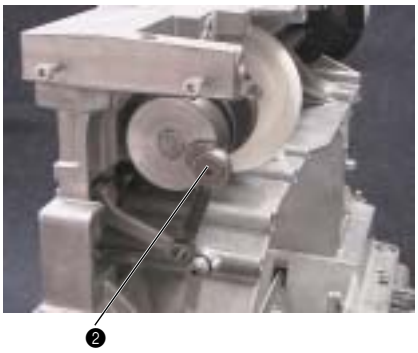

❶		Set Screw (CP) SM6.35 Color; Black	Torque 1.57 – 1.96 N-m
❷		Screw SM3.57-40X6 L Color; Grey	Torque 1.18 – 1.57 N-m

www.promelectroavtomat.ru

5 Main shaft sensor final assembly attachment

1. Attach the main shaft sensor assembly ① to the sensor holder ② with the screw ❶.
2. Attach the main shaft sensor final assembly ③ to the arm bed with the screw ❷.

***Key point**

- Rotate the pulley 360 degrees, and check that the photo diode does not contact the 150DPI encoder (transparent disk on the upper shaft final assembly).

❶	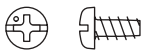	Taptite, Pan B M3X6 Color; Silver	Torque 0.59 – 0.78 N-m
❷	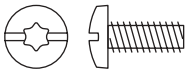	Taptite, Bind S M4X10 Color; Gold	Torque 1.47 – 1.96 N-m

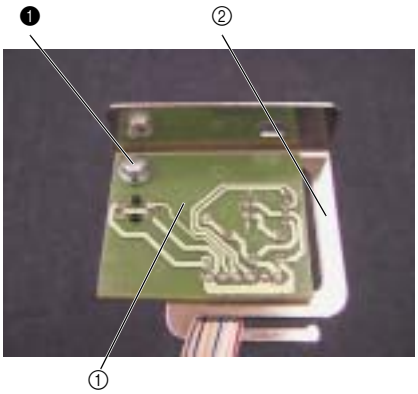

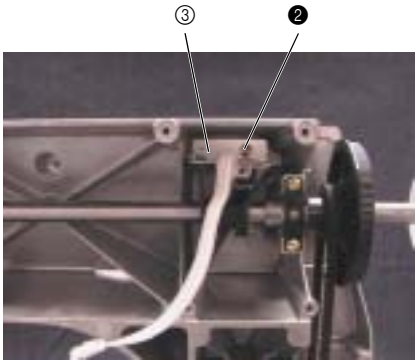

Assembly

www.promelectroavtomat.ru

6 Thread take-up driving lever final assembly

1. Attach the roller ② to the thread take-up differential lever ①, and tighten the thread take-up roller pin ③.
2. Attach the spacer ④ to the thread take-up differential lever, and temporarily tighten the screw ❶.
3. Attach the roller shaft assembly to the thread take-up driving lever with the nut (1, M5) and the spring washer (2-5).
4. Apply MOLYKOTE EM-30L grease to the shaft hole ⑤ on the thread take-up bearing.
5. Thread the thread take-up lever assembly's shaft ⑥ through the hole on the thread take-up bearing, attach the thread take-up differential lever assembly to the tip of the thread take-up driving lever assembly's shaft, and temporarily tighten the screw ❶.

   ***Key point**
   - Temporarily tighten the screw ❶ first. Firmly tighten it after completing thread take-up differential lever height adjustment in 3 - 60 "Needle bar case final assembly attachment."
6. Apply MOLYKOTE EM-30L grease to the thread take-up differential lever's roller ⑦.

Start movie clip (CD-ROM version only)

Apply MOLYKOTE EM-30L grease to the shaft hole on the thread take-up bearing.	Size of a grain of rice
Apply MOLYKOTE EM-30L grease to the thread take-up differential lever's roller.	Size of a grain of rice
Tightening torque of thread take-up roller pin:	0.78 - 1.18

❶	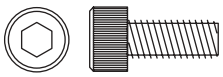	Bolt, Socket M5X12 Color; Black	Torque Hand start

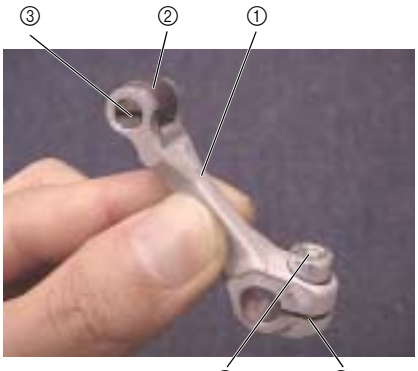

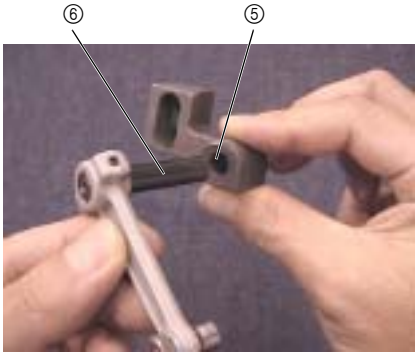

www.promelectroavtomat.ru

7 Thread take-up driving lever final assembly attachment

1. Attach the thread take-up driving lever final assembly ① to the arm bed with the 2 screws ❶.

***Key point**

- Align the roller ② with the groove ③ on the thread take-up cam.
- Press the bottom of the thread take-up driving lever final assembly against the arm bed, and then secure them with the 2 screws ❶.

Start movie clip (CD-ROM version only)

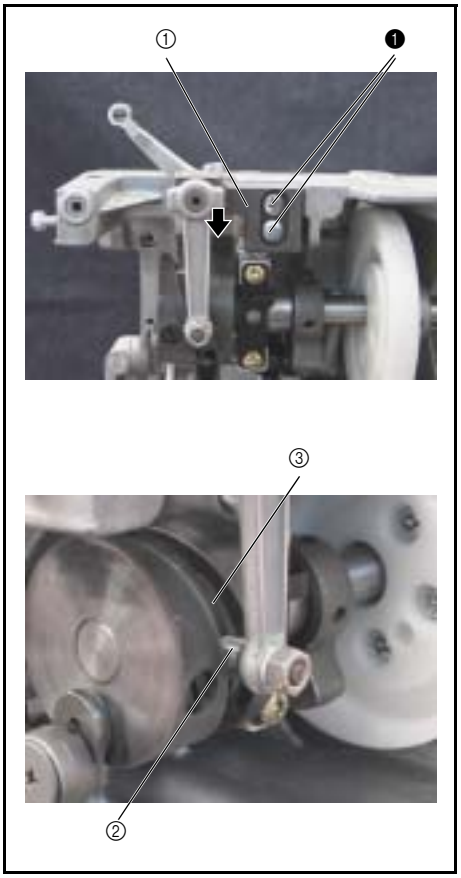

❶	Screw, Bind M5X12 Color; Silver	Torque 1.57 – 1.96 N-m

Assembly

www.promelectroavtomat.ru

8 Presser foot vertical base final assembly

1. Attach the presser foot cushion base ② to the presser foot vertical base ① with the screw ❶.
2. Thread the presser foot vertical bush ③ through the presser foot vertical base assembly, and then tighten the screw ❷.
3. Attach the presser foot vertical pin ④ to the presser foot vertical base assembly, and tighten the screw ❸.

***Key point**

- Align the presser foot vertical pin with the end face ⑤ of the presser foot vertical base.

Start movie clip (CD-ROM version only)

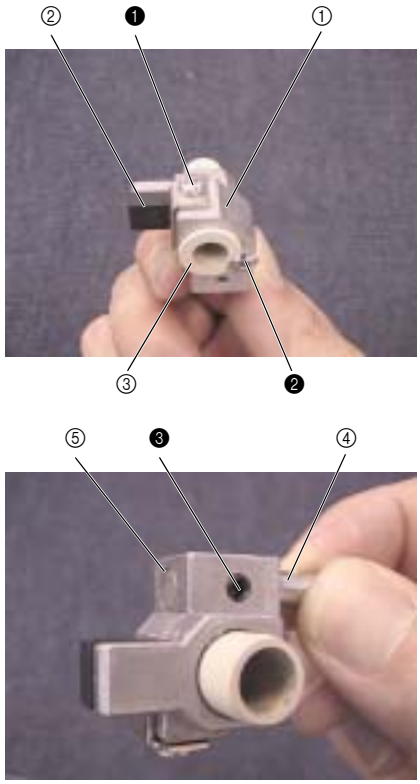

❶		Screw, Pan M3X4 Color; Silver	Torque 0.78 – 1.18 N-m
❷		Screw, Truss M2.6X3 Color; Silver	Torque 0.59 – 0.78 N-m
❸		Set Screw, Socket (CP) M4X4 Color; Black	Torque 1.57 – 1.96 N-m

www.promelectroavtomat.ru

9 Vertical set assembly

1. Attach the J cushion base ② to the J bracket ① with the 2 screws ❶.
2. Thread the J vertical bush ③ through the J bracket assembly, and then tighten the screw ❷.
3. Apply MOLYKOTE EM-30L grease to the circumference of the J vertical bush.
4. Attach the thrust washer , jump bracket ④, and second thrust washer to the J vertical bush assembly.
5. Attach the spring S45 to the J spring collar ⑤.

   ***Key point**
   - Hang the shorter hook of the J spring over the notch on the J spring collar.
6. Attach the J spring collar assembly to the J vertical bush assembly, and insert the longer J spring hook into the hole ⑥ on the jump bracket.
7. Insert the shorter J spring hook into the hole ⑦ on the J clamp while aligning the spring hook with the notch on the J spring collar, and then tighten the 2 screws ❸.

   ***Key point**
   - Check that there is no axial backlash in the J bracket.

Start movie clip (CD-ROM version only)

Apply MOLYKOTE EM-30L grease to the circumference of the J vertical bush.	Size of a grain of rice

❶		Screw, Pan M3X4 Color; Silver	Torque 0.78 – 1.18 N-m
❷		Screw, Truss M2.6X3 Color; Silver	Torque 0.59 – 0.78 N-m
❸		Screw, Pan M2.6X3 Color; Silver	Torque 0.59– 0.78 N-m
S45	7 5		J SPRING XC5617***

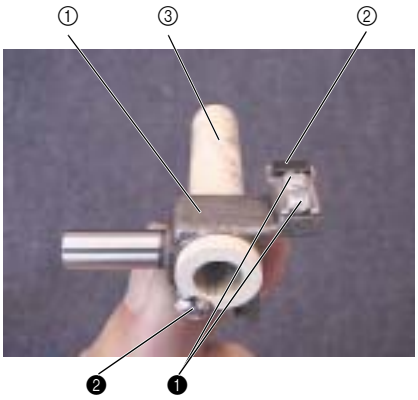

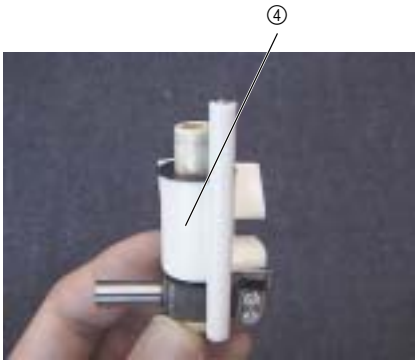

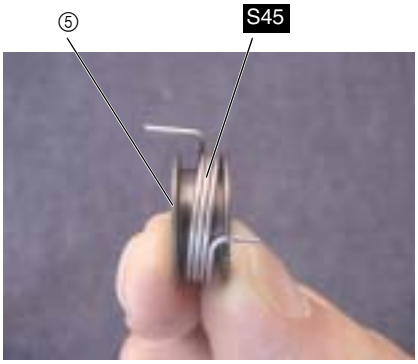

Assembly

www.promelectroavtomat.ru

10 Base needle bar attachment

1. Apply MOLYKOTE EM-30L grease to the shaft ① and the hole ② of the J-clamp final assembly and the presser foot vertical base assembly.
2. Attach the base needle bar ③, J vertical set assembly ④, and presser foot vertical base assembly ⑤.

   ***Key point**
   - Insert the shaft ① of the J vertical set assembly to the crank rod ⑥.
   - Insert the shaft ① of the presser foot vertical base assembly to the presser foot connecting rod ⑦.
3. Tighten the screw ❶.

   ***Key point**
   - Align the needle bar with the top face of the arm bed.

Start movie clip (CD-ROM version only)

Apply MOLYKOTE EM-30L grease to the shaft and the hole of the J vertical set assembly and the presser foot vertical base assembly.	Size of a grain of rice

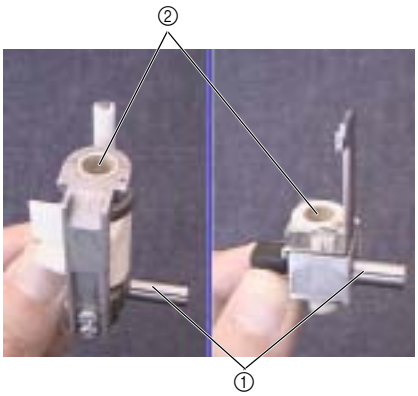

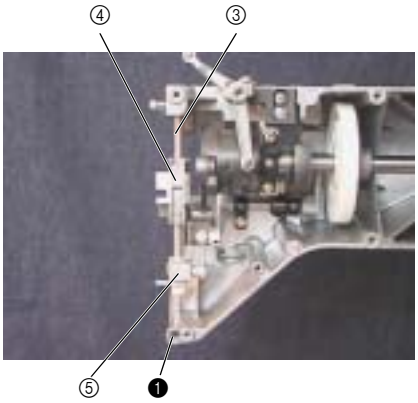

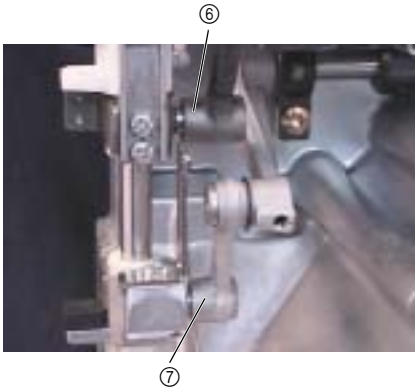

❶		Set Screw, Socket (CP) M5X6 Color; Black	Torque 1.18 – 1.57 N-m

www.promelectroavtomat.ru

11 Driving jump assembly (1)

1. Attach the J cushion pin ② and the J cushion ③ to the J base assembly ①, and then tighten the screw ❶.
2. Apply MOLYKOTE EM-30L grease to the shaft hole ④ on the J base assembly.
3. Thread the spring S46 through the shaft of the J driving level assembly ⑤, and insert the J driving lever assembly to the J base assembly.

***Key point**

- Hang the U-shaped hook ⑥ of the spring S46 over the J driving lever assembly, and then the other hook ⑦ over the J cushion.

Start movie clip (CD-ROM version only)

Apply MOLYKOTE EM-30L grease to the shaft hole on the J base assembly.	Size of a grain of rice

❶		Set Screw, Socket (FT) M3X4 Color; Black	Torque 0.59 – 0.78 N-m
S46	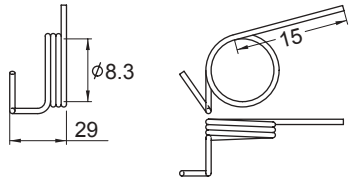		J LEVER SPRING XC5665***

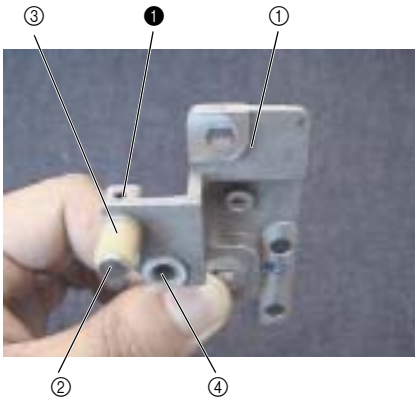

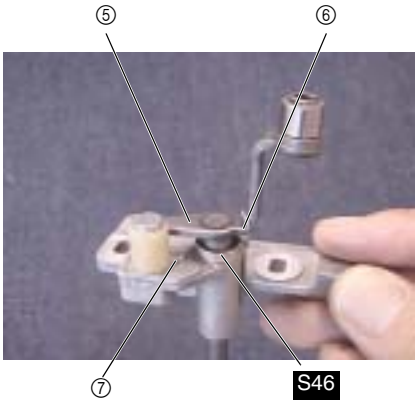

Assembly

www.promelectroavtomat.ru

12 Driving jump assembly (2)

***Key point**

- Use a positioning pin (one of adjustment jigs).

1. Thread the plain washer M5 through the differential lever, attach the differential lever to the J link assembly ①, and then attach the retaining ring E4.
2. Thread the J slide lever shaft ③ through the J slide lever ②, and then attach the retaining ring E4.
3. Apply MOLYKOTE EM-30L grease to the 3 holes ④ on the J slide lever assembly.
4. Attach the J slide lever assembly to the 2 shafts of the J base assembly.
5. Thread the thrust washer onto the shaft ⑤ of the J driving lever, and attach the J differential lever assembly while aligning it with the shaft of the J driving lever and the hole on the J slide lever.
6. Thread the positioning pin ⑧ through the positioning hole ⑥ of the J base assembly and the positioning groove ⑦ of the J link assembly, and then tighten the 2 screws ❶ to secure the J link assembly.

Start movie clip (CD-ROM version only)

Apply MOLYKOTE EM-30L grease to the 3 holes on the J slide lever assembly.	Size of a grain of rice

❶		Set Screw, Socket (FT) M3X4 Color; Black	Torque 0.59 – 0.78 N-m

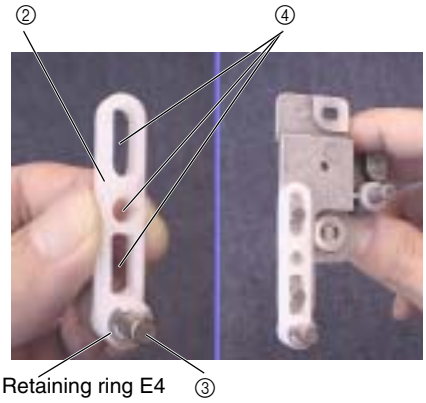

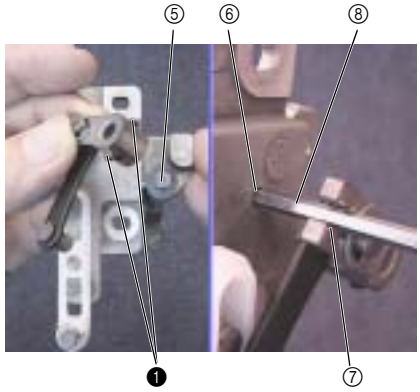

www.promelectroavtomat.ru

13 Driving jump assembly attachment

1. Attach the driving jump assembly ① to the arm bed with the 2 screws ❶.

   ***Key point**
   - Adjust the attachment position of the driving jump assembly so that the clearance ② between the driving jump assembly's J driving lever bearing and the J-clamp final assembly's jump bracket is 0 to 0.2 mm.

Start movie clip (CD-ROM version only)

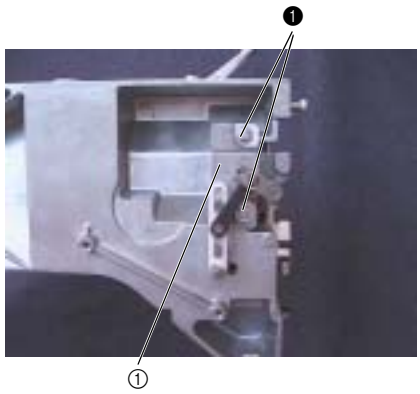

❶		Screw, Pan (S/P washer) M4X8DB Color; Silver	Torque 1.18 – 1.57 N-m

14 Tension pulley assembly attachment

1. Attach the tension pulley assembly ② to the motor holder base ① with the screw ❶.

   ***Key point**
   - Temporarily tighten the screw ❶ first. Firmly tighten it after completing 4 - 17 "Timing belt tension adjustment."

2. Attach the tension pulley final assembly to the arm bed with the 2 screws ❷.

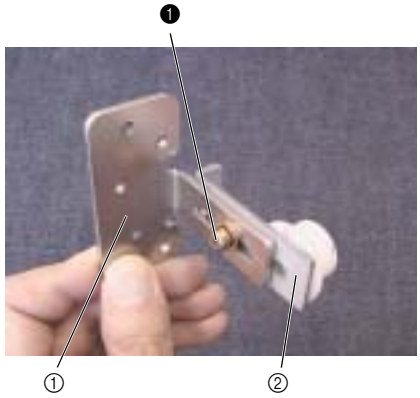

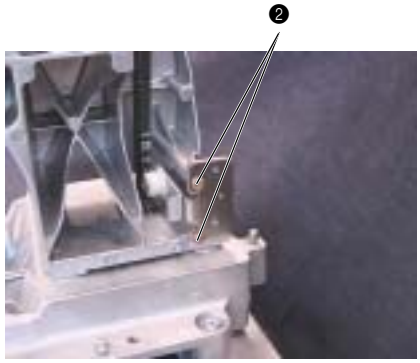

❶		Screw, Pan (S/P washer) M4X8DB Color; Silver	Torque Hand start
❷		Taptite, Bind S M4X10 Color; Gold	Torque 1.47 – 1.96 N-m

Assembly

www.promelectroavtomat.ru

15 Main motor final assembly

1. Attach the motor cap ① to the main motor assembly.
2. Attach the fender rubber ③ to the motor holder ②.
3. Attach the 2 spacers (4 x 7) ④ to the fender rubber.
4. Attach the motor holder spacer ⑤, motor holder assembly, and motor spacer presser ⑥ to the main motor assembly with the 2 screws ❶.

***Key point**

- Tighten the screw ❶ with the main motor moved in the direction of the arrow.

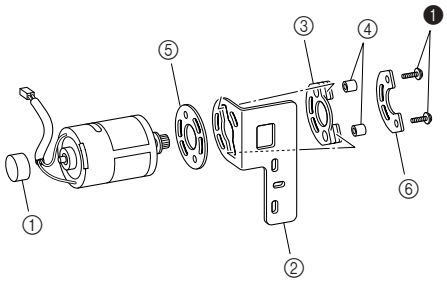

❶	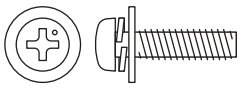	Screw, Pan (S/P washer) M4X16DB Color; Silver	Torque 1.18 – 1.57 N-m

16 Main motor final assembly attachment

1. Hang the T belt (XA9644-050) ① over the pulley on the main motor assembly and the pulley on the upper shaft assembly, and then attach the main motor final assembly to the arm bed with the 2 screws ❶.

***Key point**

- Temporarily tighten the screw ❶ first. Firmly tighten it after completing 4 - 16 "Motor belt tension adjustment."

2. Attach the motor fan ② to the pulley on the main motor assembly.

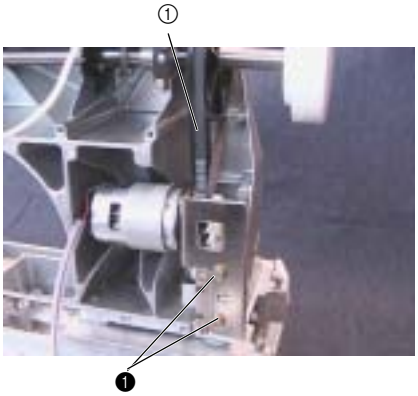

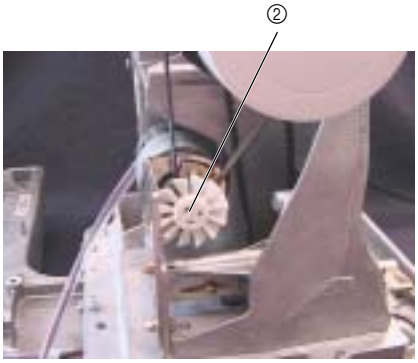

❶	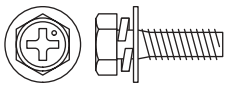	Upset 4X14DB Color; Gold	Torque Hand Start

www.promelectroavtomat.ru

Needle bar unit

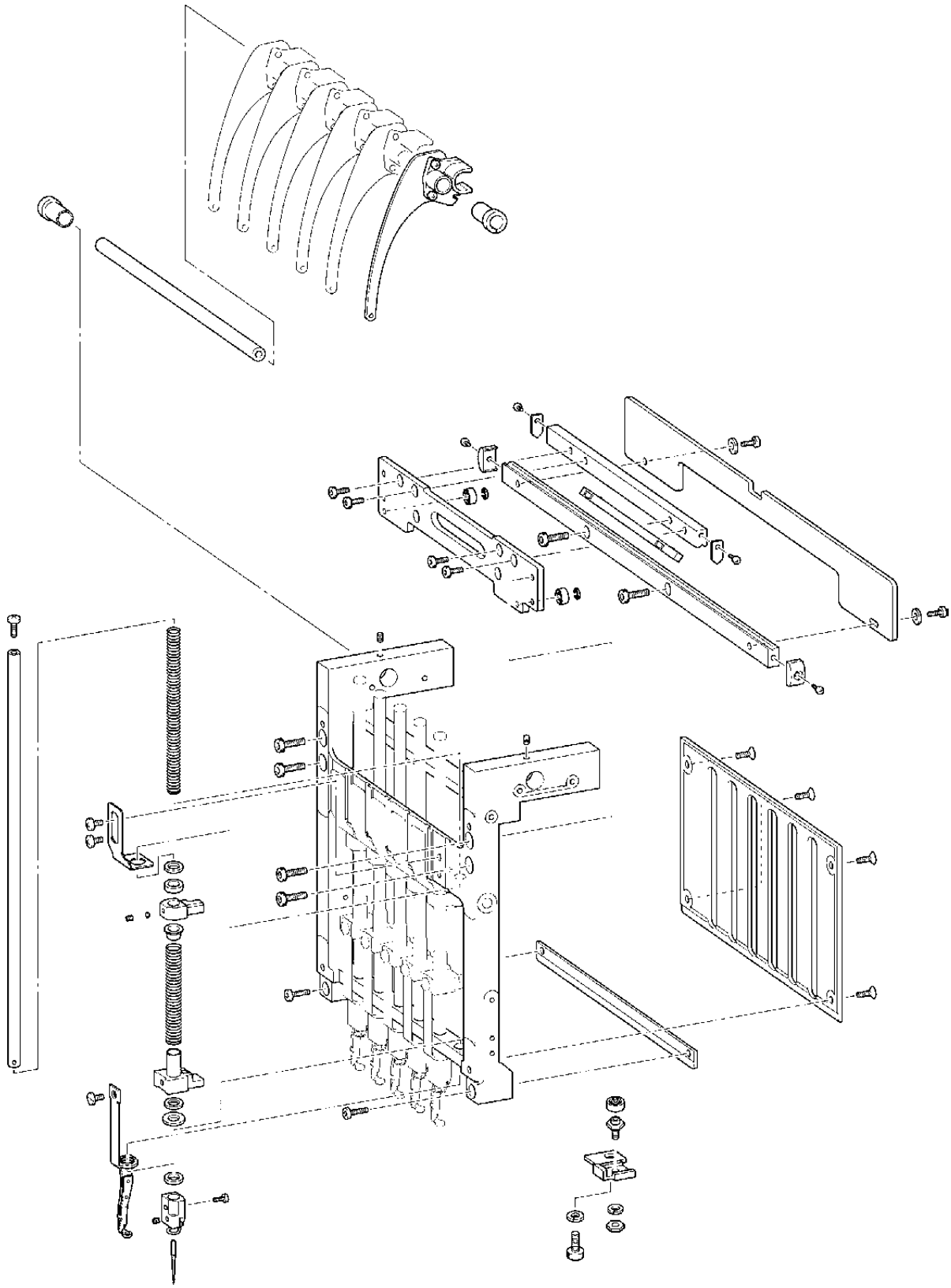

www.promelectroavtomat.ru

1 Case guide UL assembly

1. Attach the thread take-up guide ② to the case guide UL ① with the 2 screws ❶.

***Key point**

- Check that these are attached in the direction shown in the photo.

❶	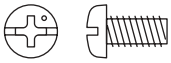	Screw, Pan M4X8 Color; Silver	Torque 1.18 – 1.57 N-m

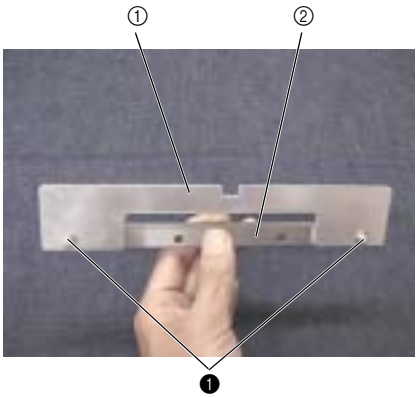

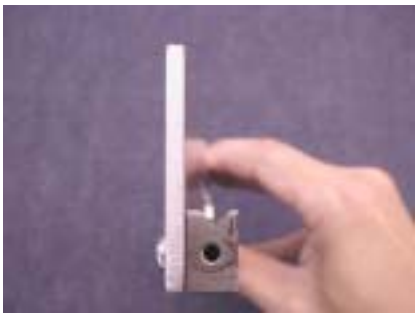

www.promelectroavtomat.ru

2 Case bracket assembly

1. Attach the 2 ball bearings 694 to the case bracket assembly ①, and attach the 2 retaining rings E3.
2. Place the 4 washers (plain S, 4) in the case bracket assembly ①, and then attach the case guide US ② with the 4 screws ❶.

***Key point**

- Temporarily tighten the screw ❶ first. Firmly tighten it after completing 3 - 54 "Case bracket assembly attachment."

Start movie clip (CD-ROM version only)

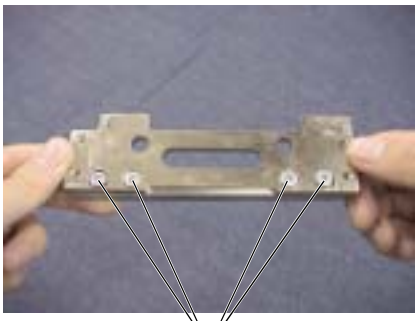

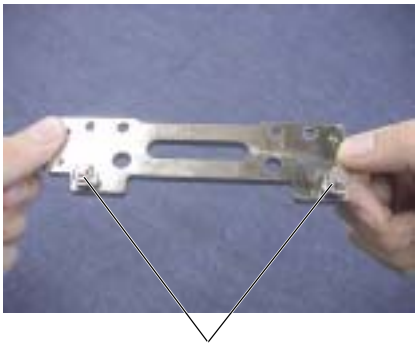

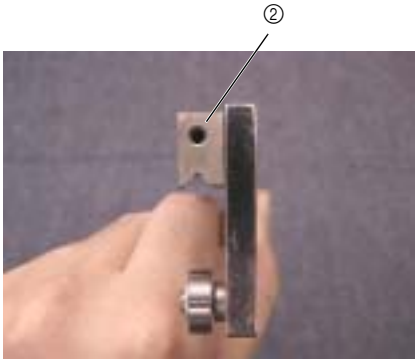

❶		Bolt, Socket M4X8 Color; Black	Torque Hand start

Assembly

3 Case bracket assembly attachment

1. Attach the case guide UL assembly ① to the arm bed with the 2 screws ❶.
2. Place the slide roller in the V groove ② on the case bracket assembly, slide the case bracket assembly horizontally to attach it to the case guide UL assembly ③, and then firmly tighten the 2 screws ❶ of the case bracket assembly.

   ***Key point**
   - Adjust the attachment position of the case bracket assembly vertically so that the clearance between the 2 ball bearings 694 of the case bracket assembly and the case guide UL assembly is zero.
3. Attach the 2 case guide UL lids ④ to both ends of the case guide UL assembly with the screw ❷.
4. Attach the 2 slide roller stoppers ③ to both ends of case guide US with the 2 screws ❸.
5. Attach the 2 case guide UL lids ④ to both ends of the case guide UL assembly with the 2 screws ❹.

Start movie clip (CD-ROM version only)

Apply MOLYKOTE EM-30L grease to the 4 slide rollers.	Size of a grain of rice

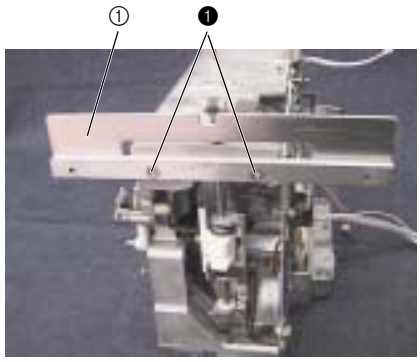

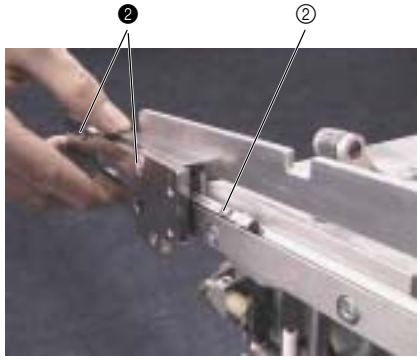

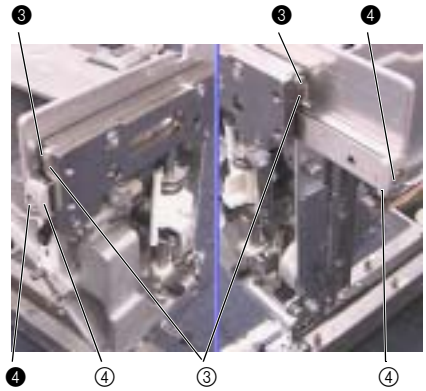

❶ ❷	Bolt, Socket M4X10 Color; Black	Torque 1.18 – 1.57 N-m
❸ ❹	Screw, Pan M3X4 Color; Silver	Torque 0.59 – 0.78 N-m

www.promelectroavtomat.ru

4 Case positioning plate assembly

1. Attach the ball bearing 694 assembly ② to the case positioning plate ③ with the nut 2, M4 ①, spring washers 2-4, and plain washers M4.

***Key point**

- Temporarily tighten the nut 2, M4 ① first. Firmly tighten them after completing 3 - 60 "Needle bar case final assembly attachment."

Tightening torque of nut (2, M4): Temporary tightening:	Torque Hand start

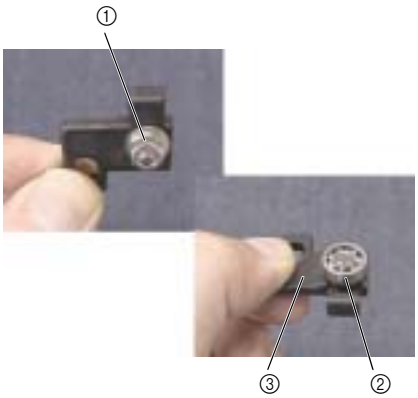

5 Case positioning plate assembly attachment

1. Attach the case positioning plate assembly ① to the arm bed with the screw ❶ and the spring washer 2-5.

***Key point**

- Temporarily tighten the screw ❶ first. Firmly tighten it after completing 4 - 18 "Needle position adjustment (front/back)."

❶	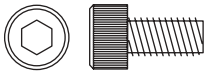	Bolt, Socket M5X10 Color; Black	Torque 1.18 – 1.57 N-m

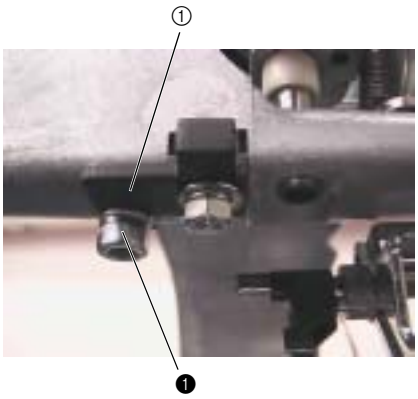

6 Needle bar case final assembly

1. Attach the needle bar guide rail ① to the needle bar case assembly with the 4 screws ❶.
2. Attach the top dead center plate ② to the needle bar case assembly with the 2 screws ❷. (6 locations)

***Key point**

- Temporarily tighten the screw ❷ first. Firmly tighten it after completing 4 - 24 "Needle bar top dead center adjustment."

❶	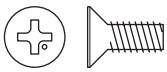	Screw, Flat M4X10 Color; Silver	Torque 1.18 – 1.57 N-m
❷	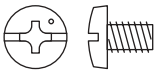	Screw, Bind M4X6 Color; Silver	Torque Hand start

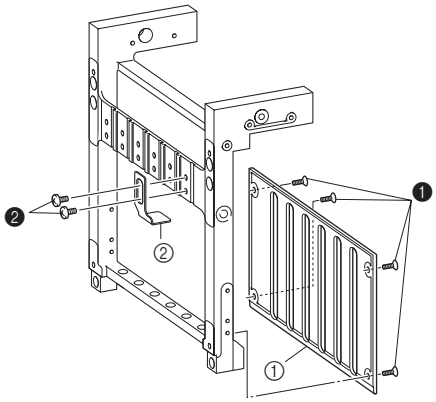

www.promelectroavtomat.ru

7 Needle bar attachment

1. Attach a screw ❶ to each of the 6 needle bars ①.
2. Apply MOLYKOTE EM-30L grease to the 12 insertion holes ② on the needle bar case.
3. Attach the spring S47 and the washer to the needle bar, and then thread the needle bar through the upper hole on the needle bar case assembly. (6 needle bars)
4. Attach the cushion rubber ③, needle bar clamp ④, presser foot spring collar ⑤, spring [S48], presser foot clamp ⑥, and felt (S, hard) ⑦ to the needle bar, and then thread the needle bar through the lower hole on the needle bar case assembly. (6 need bars).
5. Attach the felt (S) ⑧, presser foot assembly ⑨, presser foot cushion ⑩ (with indentation facing up), and needle bar thread guide ⑪, and then secure the thread guide ⑫ with the screw ❷. (6 needle bars).
6. Secure the presser foot assembly to the presser foot clamp with the screw ❸.(6 locations)

   ***Key point**
   - Temporarily tighten the screw ❸ first. Firmly tighten it after completing 4 - 23 "Presser foot height adjustment."
7. Place the washer ⑬ on the screw hole on the needle bar clamp, and tighten the screw ❹. (6 locations)

   ***Key point**
   - Temporarily tighten the screw ❹ first. Firmly tighten it after completing 4 - 21 "Needle bar height adjustment."

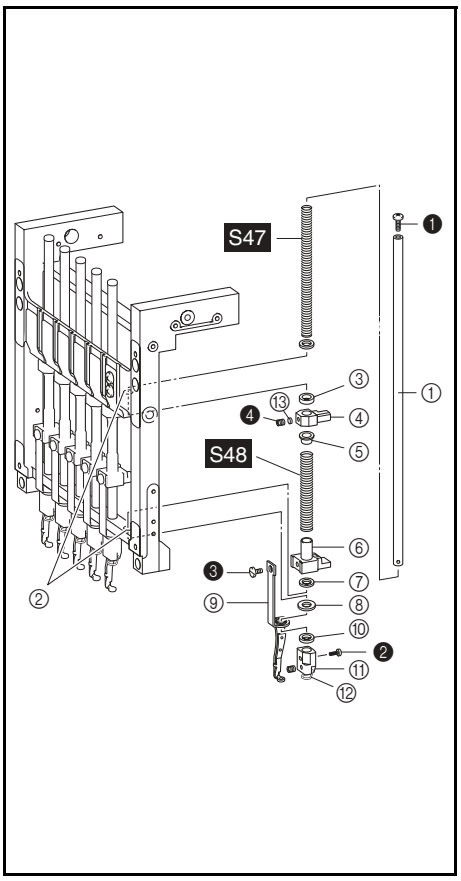

Start movie clip (CD-ROM version only)"

Apply MOLYKOTE EM-30L grease to the insertion holes on the needle bar case.	Size of a grain of rize

❶	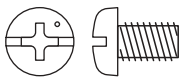	Screw, Pan M5X8 Color; Silver	Torque 1.18 – 1.57 N-m
❷		Screw, Pan M3X6 Color; Silver	Torque 0.78 – 1.18 N-m
❸	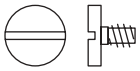	Screw Color;	Torque Hand start
❹		Set Screw, Socket (CP) SM4.37-40X4 Color; Black	Torque Hand start
S47	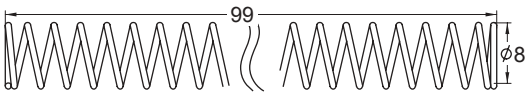	SPRING, NEEDLE BAR XC5680***	
S48	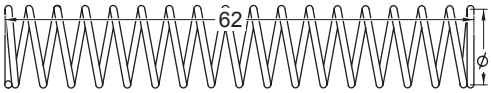	PRESSER FOOT SPRING XC5683***	

www.promelectroavtomat.ru

8 Thread take-up lever assembly

1. Attach the thread take-up boss ① to the thread take-up lever ② with the 2 screws ❶. (6 sets)

***Key point**

- Apply ThreeBond 1401 to the screw ❶ and then tighten it.

Apply ThreeBond 1401.	Size of a grain of rice

❶		Screw, Pan M3X6 Color; Silver	Torque 0.59 – 0.78 N-m

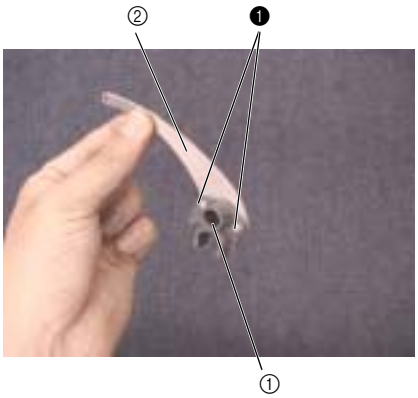

Assembly

www.promelectroavtomat.ru

9 Thread take-up lever assembly attachment

1. Attach the 2 thread take-up bushes ① to the needle bar case assembly.
2. Apply MOLYKOTE EM-30L grease to the 6 shaft holes ② on the thread take-up lever assembly.
3. Thread the thread take-up shaft ③ through the thread take-up bush, and then attach the 6 thread take up lever assemblies.
4. Adjust the clearance between the right thread take-up bush and the needle bar case to 1.6 mm, and then secure the thread take-up bush with the screw ❶.
5. Move the left thread take-up bush to the right, and then secure the bush with the screw ❶.

Start movie clip (CD-ROM version only)

Apply MOLYKOTE EM-30L grease to the shaft holes on the thread take-up lever assembly.	Size of a grain of rice

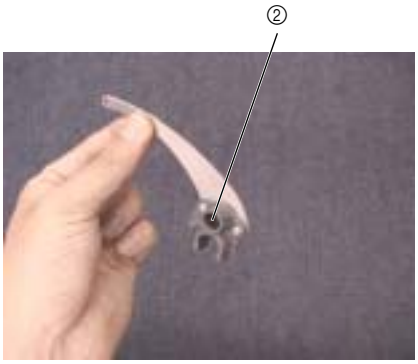

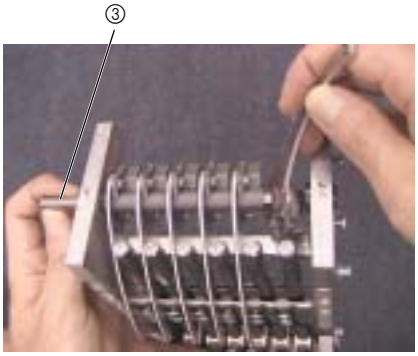

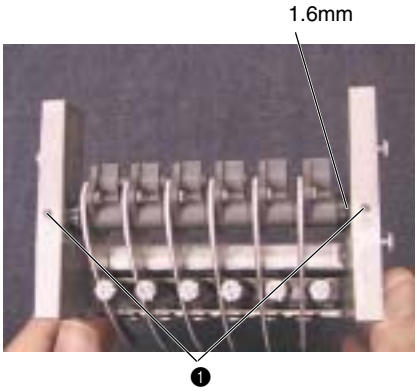

❶		Set Screw, Socket (FT) M4X4 Color; Black	Torque 0.78 – 1.18 N-m

www.promelectroavtomat.ru

10 Case guide D attachment

1. Attach the case guide D ① to the needle bar case assembly with the 2 screws ❶.

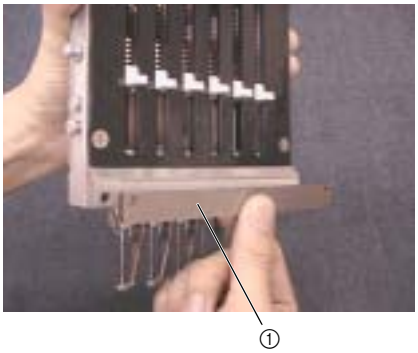

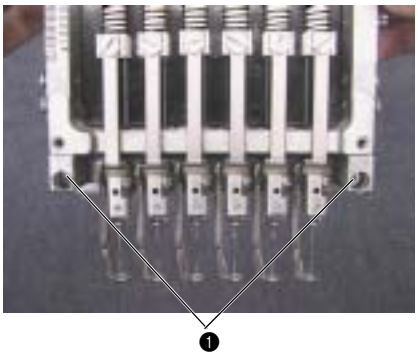

❶	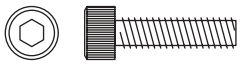	Bolt, Socket M4X16 Color; Black	Torque 1.18 – 1.57 N-m

11 Change roller base assembly attachment

1. Attach the change roller base assembly ① to the needle bar case assembly with the 2 screws ❶.

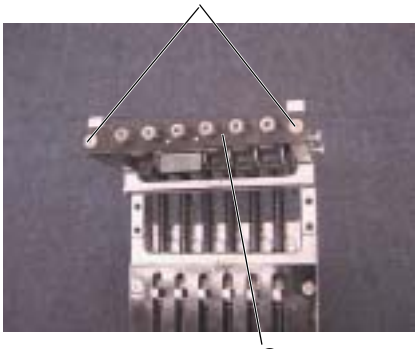

❶	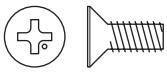	Screw, Flat M4X10 Color; Silver	Torque 0.78 – 1.18 N-m

www.promelectroavtomat.ru

12 Needle bar case final assembly attachment

1. Rotate the pulley until the base line on the pulley is at the top.
2. Apply MOLYKOTE EM-30L grease to the roller ① of the thread take-up differential lever.
3. Attach the needle bar case final assembly to the case bracket assembly with the 4 screws ❶.

   ***Key point**
   - Align the thread take-up boss ⓑ on the thread take-up lever assembly with [B] on the case guide UL assembly, and then align the thread take-up boss ⓒ with the roller [C] on the thread take-up differential lever.
   - Align the case guide D ⓐ with the case positioning plate assembly [A]
4. Move the ball bearing 694 assembly ② on the case positioning plate assembly toward you, and firmly tighten the nut 2, M4.
5. Adjust the vertical position of the thread take-up differential lever so that the needle bar case final assembly lightly moves right and left. Firmly tighten the screw ❷.

Start movie clip (CD-ROM version only)

Apply MOLYKOTE EM-30L grease to the roller on the thread take-up differential lever.	Size of a grain of rice
Tightening torque of nut (2, M4):	1.18 - 1.57

❶	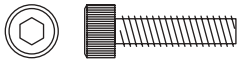	Bolt, Socket M4X16 Color; Black	Torque 1.18 – 1.57 N-m
❷	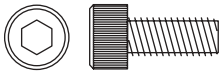	Bolt, Socket M5X12 Color; Black	Torque 2.94 – 3.43 N-m

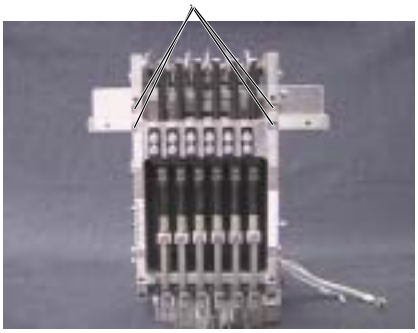

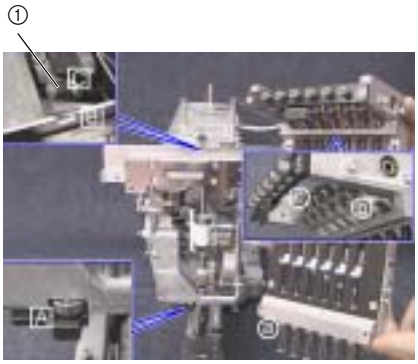

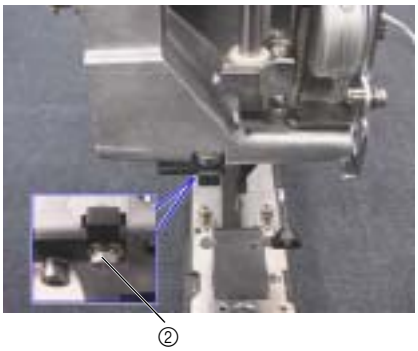

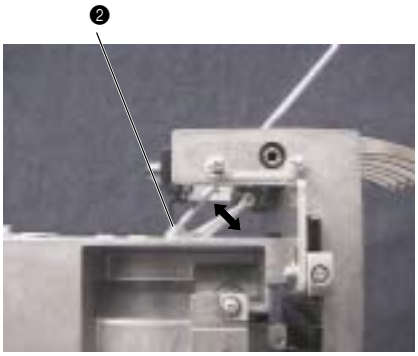

www.promelectroavtomat.ru

Thread wiper unit

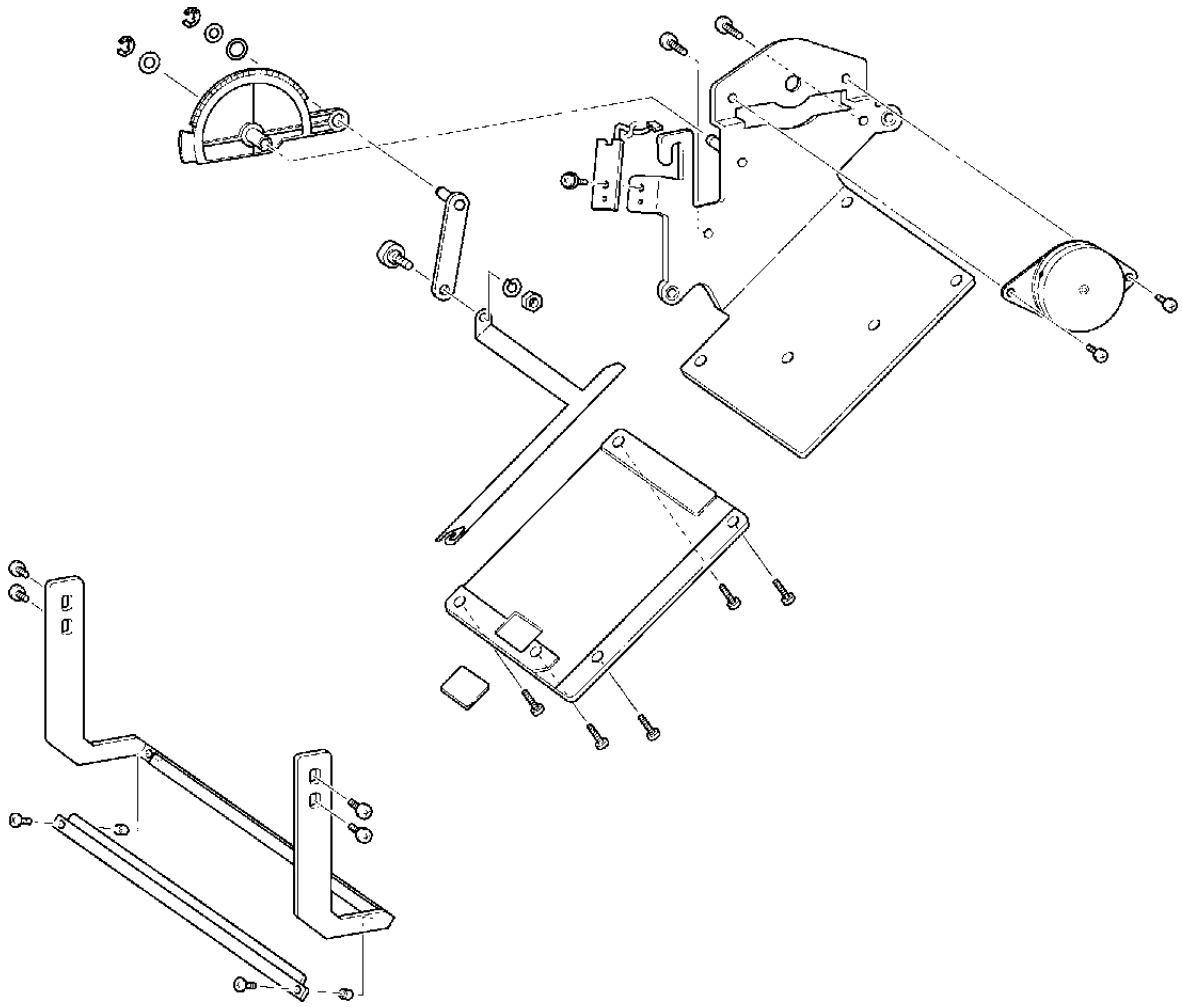

www.promelectroavtomat.ru

1 Wiper set assembly

1. Attach the wiper motor assembly ② to the wiper base assembly ① with the 2 screws ❶.
2. Attach the wiper link assembly ④ and the plain washer (M5) to the wiper lever ③, and then attach the retaining ring E4.
3. Attach the wiper lever assembly, washer, and plain washer (M6) to the wiper base assembly's shaft, and then attach the retaining ring E4.

   ***Key point**
   - Align the mark ⑤ on the wiper lever assembly's gear with the mark on the wiper lever assembly.
4. Attach the wiper hook ⑧ to the wiper link with the wiper shoulder screw ⑥, spring washer (2-4), and the nut (3, M4) ⑦.
5. Paint the wiper motor assembly's connector blue.

Start movie clip (CD-ROM version only)

Tightening torque of nut (3, M4):	1.18 - 1.57

❶		Screw, Pan M3X4 Color; Silver	Torque 0.78 – 1.18 N-m

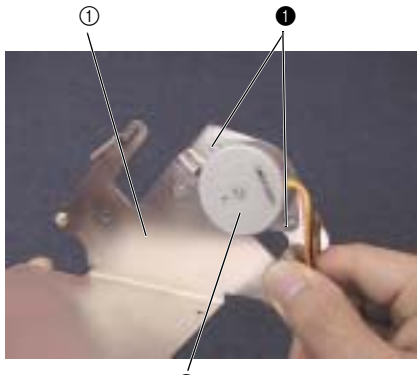

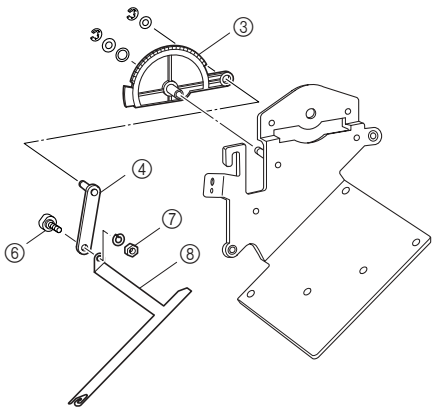

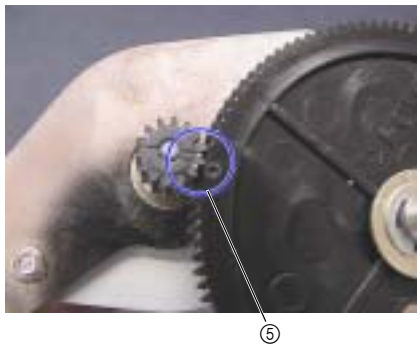

www.promelectroavtomat.ru

2 Wiper guide and wiper sensor attachment

1. Attach the wiper cushion ② to the wiper guide ①.
2. Attach the wiper guide assembly to the wiper base assembly with the 6 screws ❶.
3. Attach the wiper sensor assembly ③ to the wiper base assembly with the screw ❷.
4. Apply MOLYKOTE EM-30L grease to the wiper lever gear ④.

Apply MOLYKOTE EM-30L grease to the wiper lever gear.	Size of a grain of rice

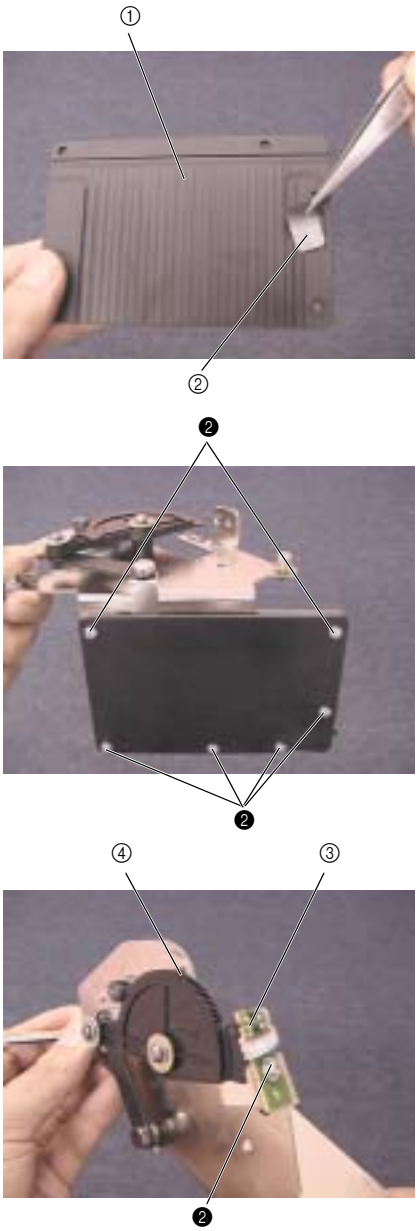

❶		Screw, Pan M3X6 Color; Silver	Torque 0.59 – 0.78 N-m
❷		Screw, Pan (S/P washer) M3X6 Color; Silver	Torque 0.59 – 0.78 N-m

Assembly

www.promelectroavtomat.ru

3 Wiper set assembly attachment

1. Slightly rotate the wiper lever counterclockwise to create a clearance between the wiper lever dog and the wiper sensor assembly ①.
2. Attach the wiper set assembly to the arm bed with the 2 screws ❶.

   ***Key point**]
   - Route the wiper sensor assembly's lead wire ② behind the driving jump assembly's J slide lever and the J base.
3. Thread the wiper sensor assembly's lead wire and the wiper motor assembly's lead wire through the spiral tube B ③, and then attach them to the wiper base assembly with the screw ❷ and the cord clamp NK-5N.
4. Thread the wiper sensor assembly's lead wire and the wiper motor assembly's lead wire through the hole ④ on the arm bed until they come out from the right side of the arm bed.

Start movie clip (CD-ROM version only)

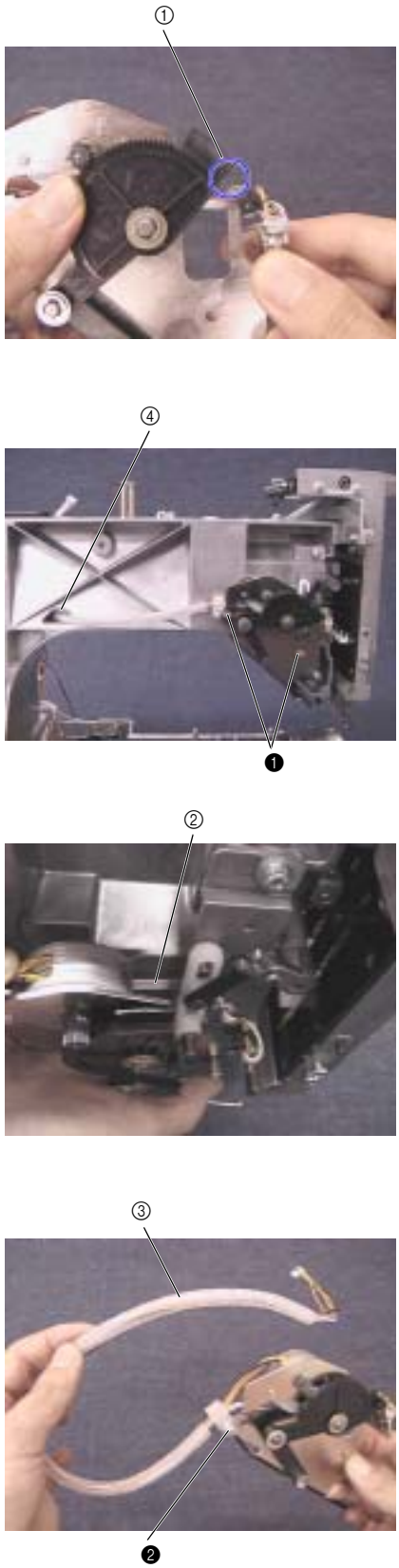

❶	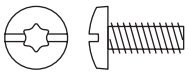	Taptite, Bind S M4X10 Color; Gold	Torque 1.47 – 1.96 N-m
❷	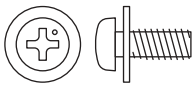	Screw, Pan (S/P washer) M4X10A Color; Silver	Torque 0.78 – 1.18 N-m

www.promelectroavtomat.ru

4 Thread presser base assembly

1. Attach the 2 thread presser spacers ② and the thread presser cover assembly ③ to the thread presser base assembly ① with the 2 screws ❶.

❶		Screw, Pan M3X7 Color; Silver	Torque 0.78 – 1.18 N-m

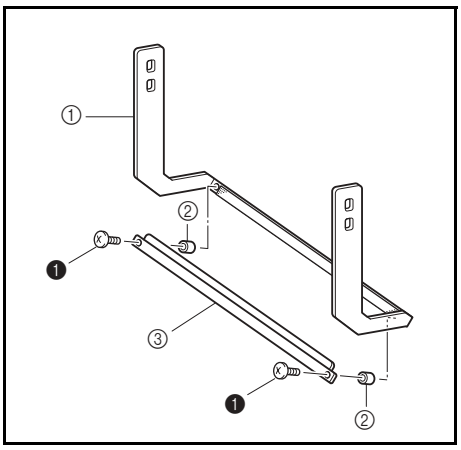

5 Thread presser base attachment

1. Attach the thread presser base assembly ① to the needle bar case ② with the 4 screws ❶.

***Key point**

- Temporarily tighten the screws ❶ first. Firmly tighten them after completing 4 - 32 "Thread presser base up/down position adjustment."

Start movie clip (CD-ROM version only)

❶		Screw, Bind M4X6 Color; Silver	Torque Hand start

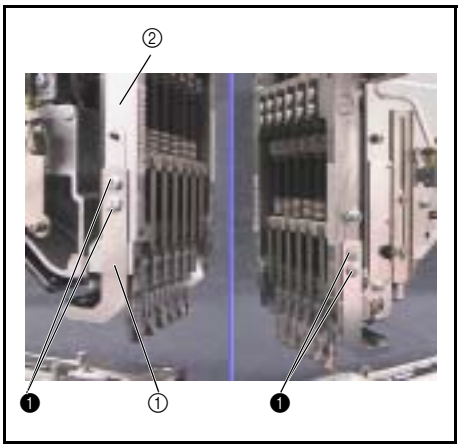

Assembly

www.promelectroavtomat.ru

Needle bar change unit

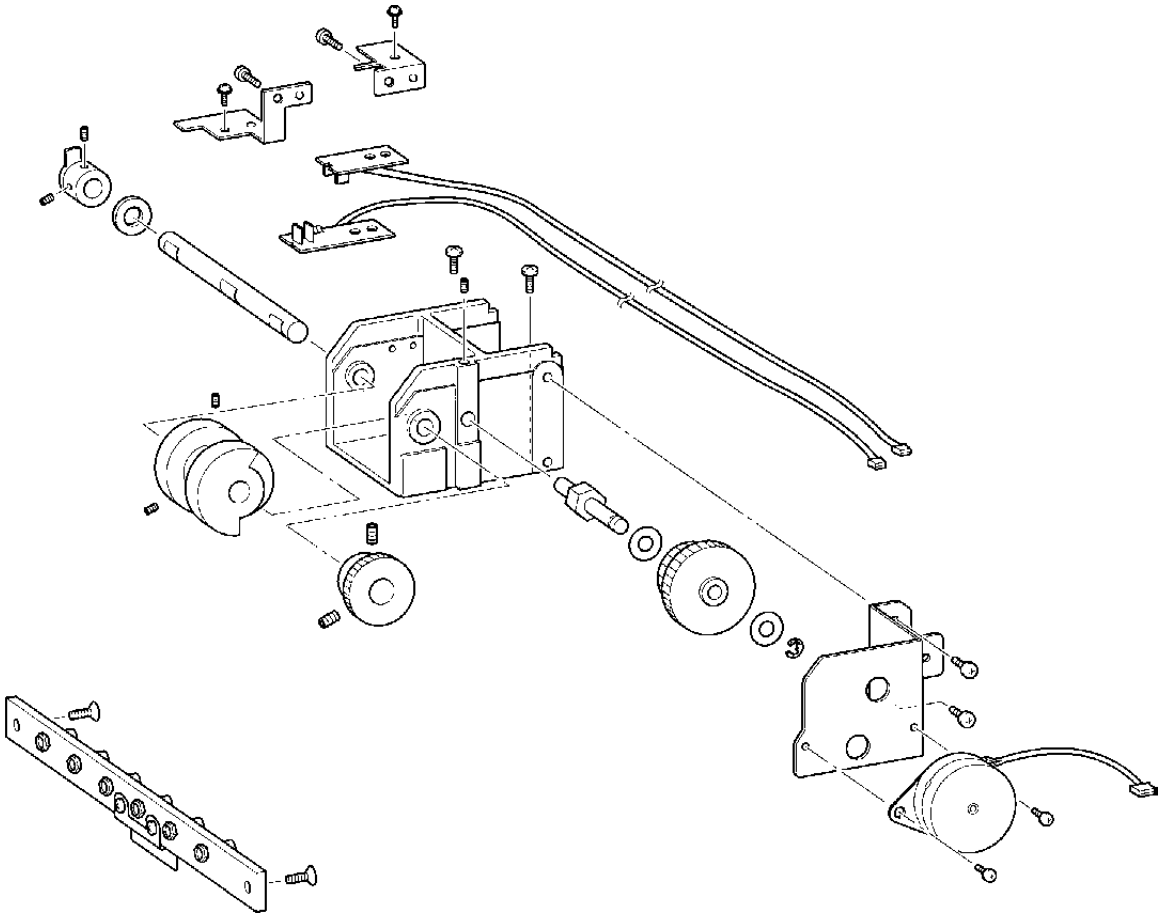

www.promelectroavtomat.ru

1 Change box assembly (Step 1)

1. Attach the C stop position dog ① to the change camshaft ② with the 2 screws ❶.

   ***Key point**
   - Align the change camshaft's end face (grooved) with the C stop position dog's end face.
   - Align the D-cut face ③ on the change camshaft with the screw hole positioned 90-degrees to the right when the C stop position dog is at the top.
2. Apply MOLYKOTE EM-30L grease to the 2 shaft holes ④ on the change box assembly.
3. Attach the change camshaft assembly, thrust washer ⑤, and change cam ⑥ to the change box assembly, and then secure the change cam with the 2 screws ❷.

   ***Key point**
   - Align the C stop position dog with the mark ⑦ on the change cam.

Start movie clip (CD-ROM version only)

Apply MOLYKOTE EM-30L grease to the shaft holes on the change box assembly.	Size of a grain of rice

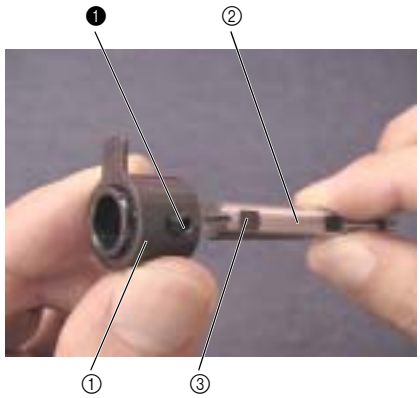

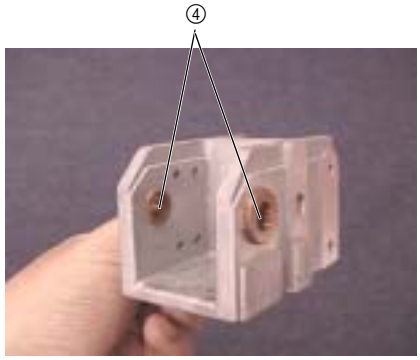

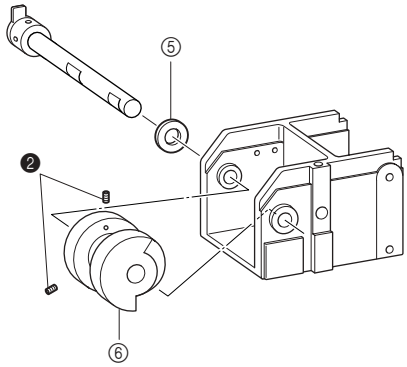

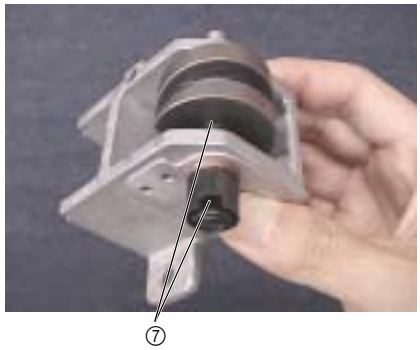

❶		Set Screw, Socket (CP) M4X4 Color; Black	Torque 0.78 – 1.18 N-m
❷		Set Screw, Socket (CP) M5X6 Color; Black	Torque 1.18 – 1.57 N-m

www.promelectroavtomat.ru

2 Change box assembly (Step 2)

1. Attach the change gear ① to the change camshaft.
2. Move the change gear toward the change cam, and secure it with the 2 screws ❶.

   ***Key point**
   - Align the screw hole on the change gear with the D-cut face on the change camshaft.
3. Attach the plain washer (M6), C differential gear ③, and plain washer (M6) to the differential gear shaft ②, and then attach the retaining ring E4.
4. Attach the differential gear shaft assembly to the change gear box, and then tighten the screw ❷.

   ***Key point**
   - Turn the differential gear shaft to adjust the backlash of the C differential gear.
5. Apply MOLYKOTE EM-30L grease to the groove ④ on the change cam.

Start movie clip (CD-ROM version only)

Apply MOLYKOTE EM-30L grease to the groove on the change cam.	Size of a bean

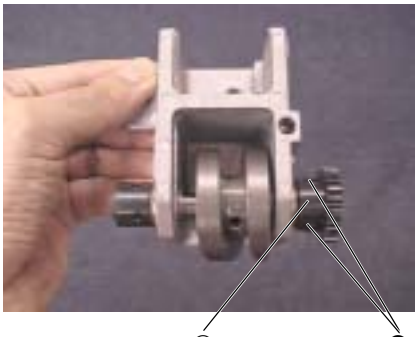

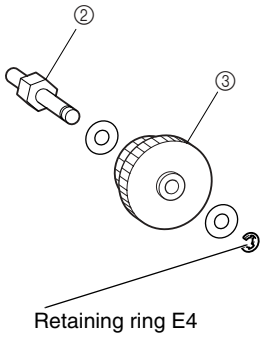

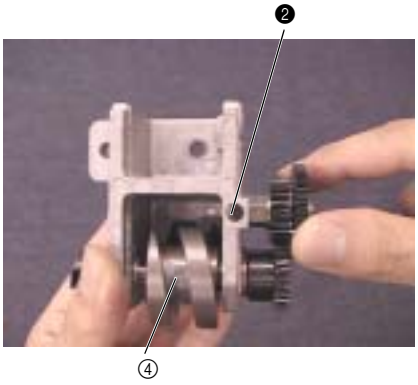

❶		Set Screw, Socket (CP) M5X6 Color; Black	Torque 1.18 – 1.57 N-m
❷		Set Screw, Socket (FT) M4X4 Color; Black	Torque 0.78 – 1.18 N-m

www.promelectroavtomat.ru

3 Change box assembly (Step 3)

1. Attach the index motor assembly ① to the change motor base ② with the 2 screws ❶.
2. Attach the change motor base assembly to the change box assembly with the 2 screws ❷.

   ***Key point**
   - Move the change motor base assembly up and down to adjust the backlash of the index motor assembly's gear and the C differential gear.
3. Apply MOLYKOTE EM-30L grease to the index motor gear and the C differential gear.
4. Attach the index sensor assembly ③ to the C sensor bracket ④ with the screw ❸.
5. Attach the C sensor bracket assembly to the change box assembly with the screw ❹.
6. Attach the color change sensor assembly ⑤ to the C sensor bracket lower ⑥.
7. Attach the C sensor bracket assy lower to the change box with the screw ❻.
8. Paint the index motor assembly's connector green.

Start movie clip (CD-ROM version only)

Apply MOLYKOTE EM-30L grease to the index motor gear and the C differential gear.	Size of grain of rice

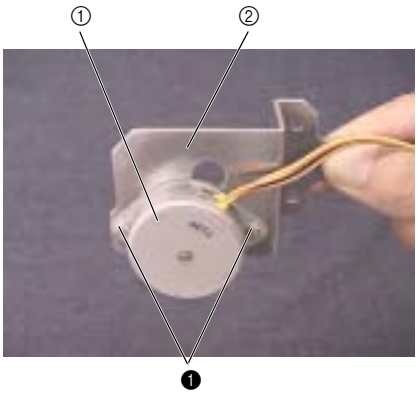

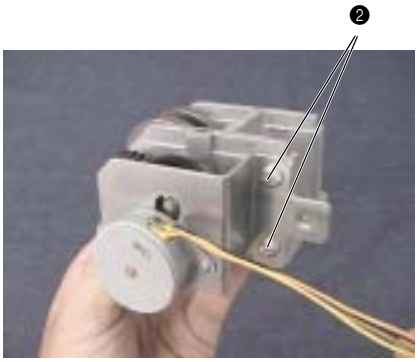

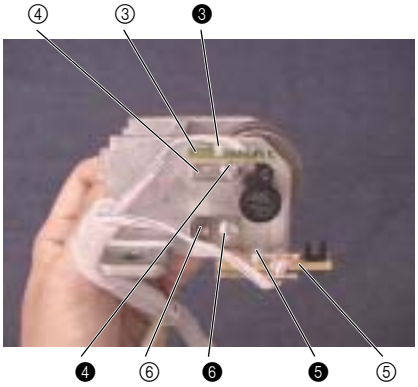

❶		Screw, Pan M3X4 Color; Silver	Torque 0.59 – 0.78 N-m
❷ ❹ ❻		Screw, Bind M4X6 Color; Silver	Torque 1.18 – 1.57 N-m
❸ ❺		Screw, Pan (S/P washer) M3X6 Color; Silver	Torque 0.59 – 0.78 N-m

4 Change box assembly attachment

1. Attach the change box assembly ① with the 2 screws ❶.

   ***Key point**
   - Align the change roller ③ with the cam groove ② on the change cam.
   - Temporarily tighten the screws ❶ first. Firmly tighten them after completing 4 - 19 "Needle position adjustment (right/left)."

Start movie clip (CD-ROM version only)

❶		BOLT. (S/P WASHER) M5X16 Color; Silver	Torque Hand start

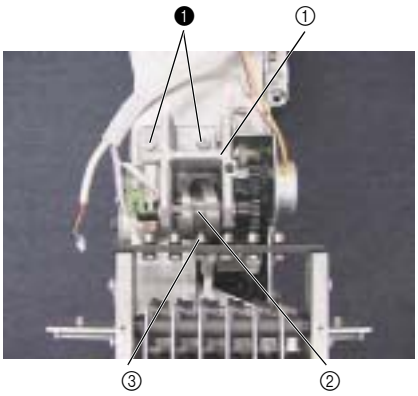

www.promelectroavtomat.ru

Needle thread unit

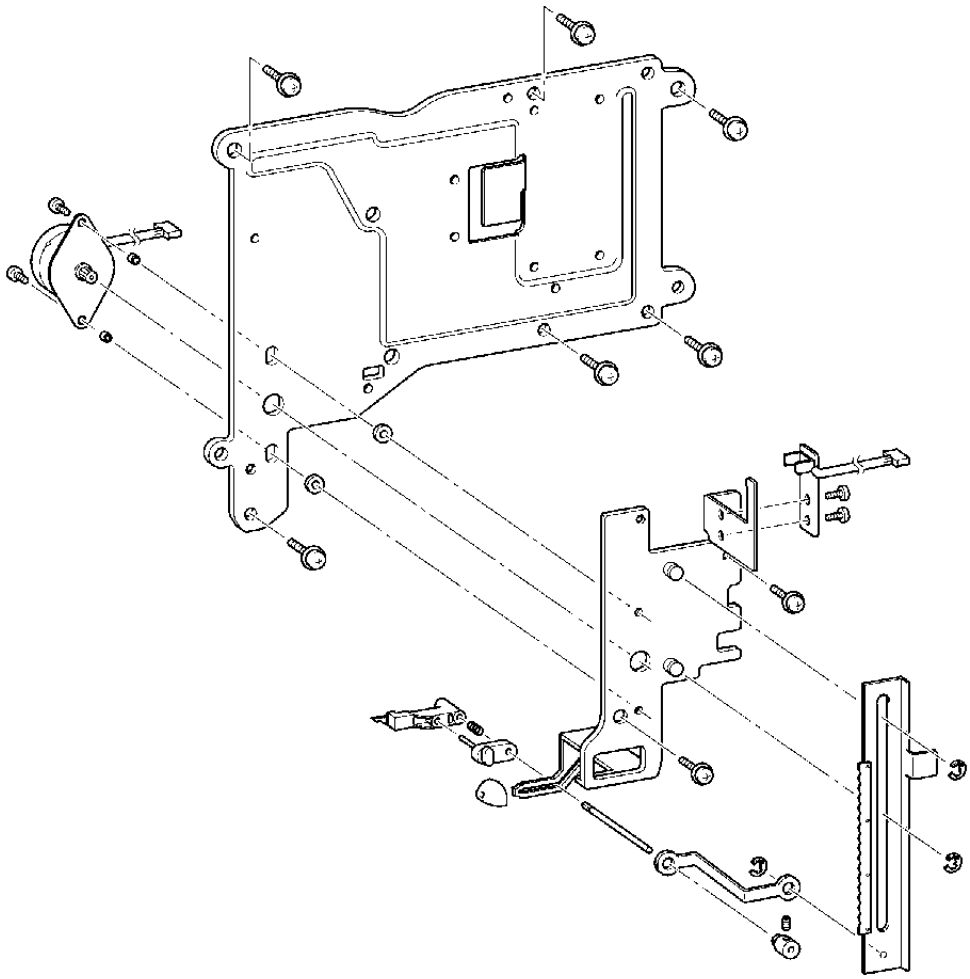

www.promelectroavtomat.ru

1 Thread motor assembly attachment

1. Attach the base plate assembly ② to the thread guide base ① with the 2 screws ❶.

   ***Key point**
   - Firmly tighten the 2 screws ❷ after completing 4 - 25 "Needle threader adjustment (up/down)."

2. Attach the thread motor assembly ③ and the 2 spacers ④ to the base plate assembly ③ with the 2 screws ❷.
3. Paint the thread motor's connector red.

Start movie clip (CD-ROM version only)

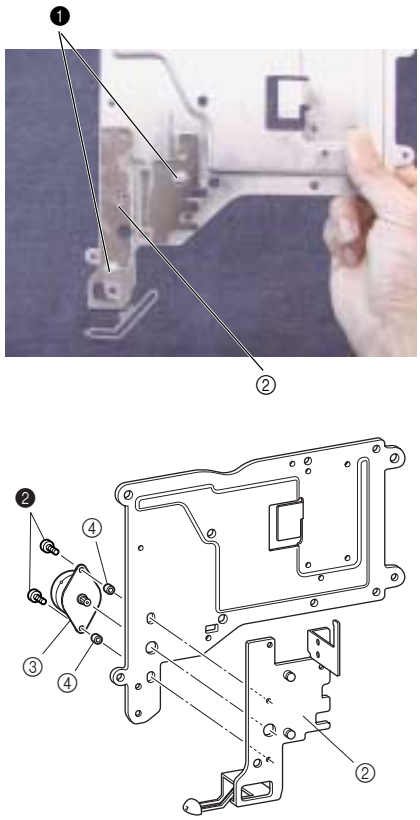

❶		Screw, Pan (S/P washer) M4X8DB Color; Silver	Torque Hand start
❷		Screw, Pan M3X6 Color; Silver	Torque 0.59 – 0.78 N-m

Assembly

www.promelectroavtomat.ru

2 Rack assembly and hook holder link attachment

1. Attach the hook holder link ① to the rack assembly's shaft, and then attach the retaining ring E3.
2. Apply MOLYKOTE EM-30L grease to the gear face ② and the connecting face on the rack assembly, and the hook holder shaft attachment hole ③ on the hook holder link.
3. Attach the rack assembly to the base plate assembly's 2 shafts, and then attach the 2 retaining rings E4.
4. Attach the needle thread sensor assembly ④ to the base plate assembly with the 2 screws ❶.

Apply MOLYKOTE EM-30L grease to the gear face and the connecting face on the rack assembly, and the hook holder shaft attachment hole on the hook holder link.	Size of a grain of rice

❶		Screw, Pan (S/P washer) M3X6 Color; Silver	Torque 0.59 – 0.78 N-m

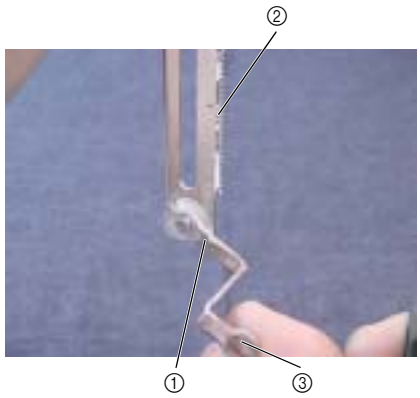

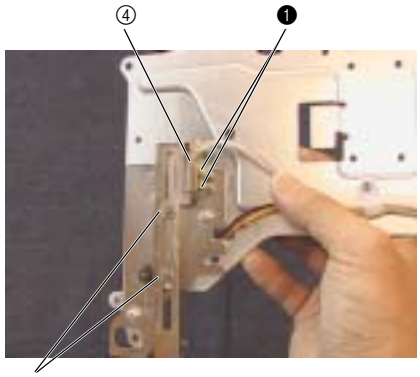

Retaining rings E4

3 Hook assembly

1. Attach the bush ② to the hook holder axis B ① with the screw ❶.

   ***Key point**
   - Temporarily tighten the screw ❶ first. Firmly tighten it after completing 4 - 26 "Needle threader adjustment (right/left)."
2. Attach the set collar assembly ③ to the base plate assembly.

   ***Key point**
   - Thread the set collar assembly through the slot on the base plate, and turn it 90 degrees.
3. Thread the hook holder axis B assembly through the hole ④ on the hook holder link, the groove on the base plate assembly, the set collar assembly, and the spring S56 , and then attach the hook holder assembly ⑤ to the hook holder axis B assembly and the set collar assembly's axis.
4. Attach the cap ⑥ to the tip of the slot on the base plate assembly.

Start movie clip (CD-ROM version only)

❶		Set Screw, Socket (CP) M3X3 Color; Black	Torque 0.59 – 0.78 N-m

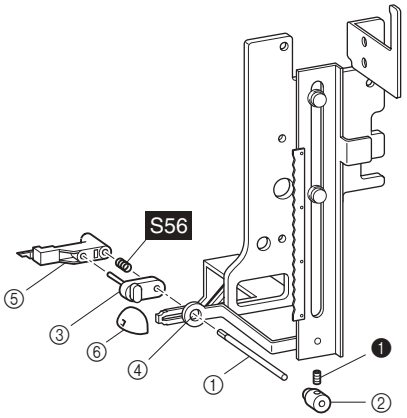

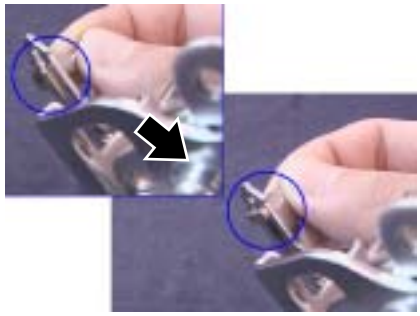

www.promelectroavtomat.ru

4 Needle thread assembly attachment

1. Attach the needle thread assembly ① with the 6 screws ❶.

Start movie clip (CD-ROM version only)

❶	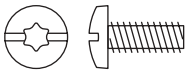	Taptite, Bind S M4X10 Color; Gold	Torque Hand start

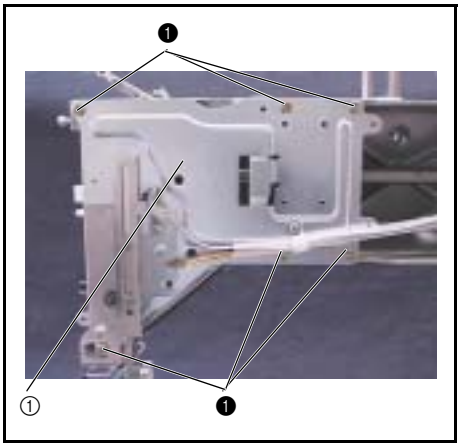

www.promelectroavtomat.ru

Feed unit

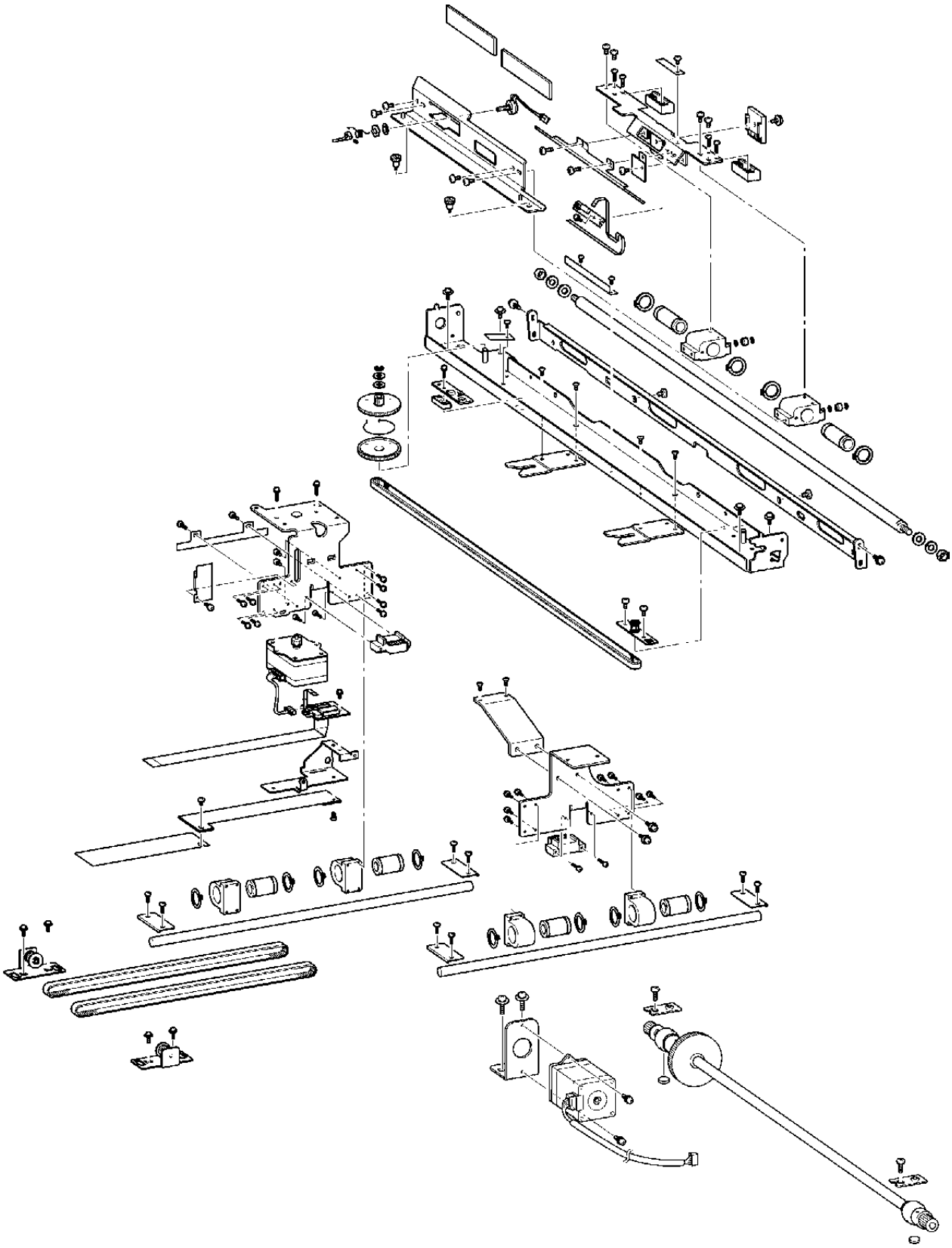

www.promelectroavtomat.ru

1 Connect PCB final assembly

1. Bend the FFC (SML2CD-Y) 90 degrees at a point 55 mm from the tip.
2. Attach the sheet ② and the FFC (SML2CD-Y) ③ to the PCB holder ① with the screw ❶.
3. Attach the connect PCB assembly ④ to the PCB holder assembly with the screw ❷.
4. Connect the FFC (SML2CD-Y) to the connect PCB assembly, and then lock the connector.

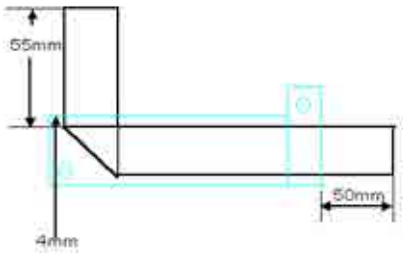

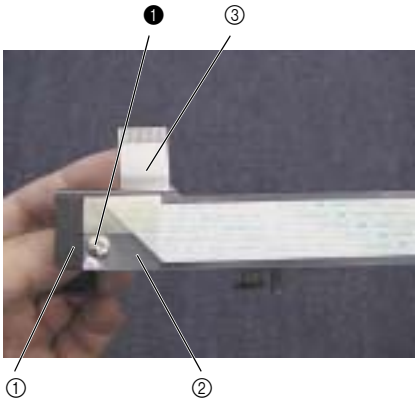

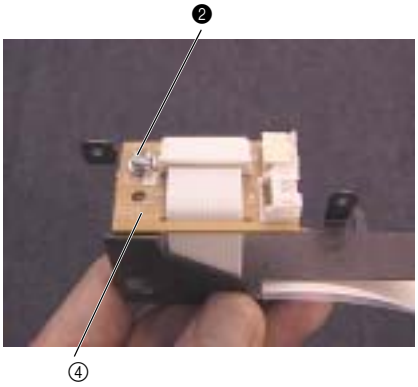

❶	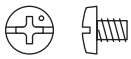	Screw, Bind M3X4 Color; Silver	Torque 0.59 – 0.78 N-m
❷		Screw, Pan (S/P washer) M3X6 Color; Silver	Torque 0.59 – 0.78 N-m

Assembly

www.promelectroavtomat.ru

2 Y-carriage R assembly

1. Attach the linear bearing 10 ② to bearing case Y ①, and then attach the 2 external retaining rings C19.
2. Attach the 2 bearing case Y assemblies to Y-carriage R ③ with the 8 screws ❶.

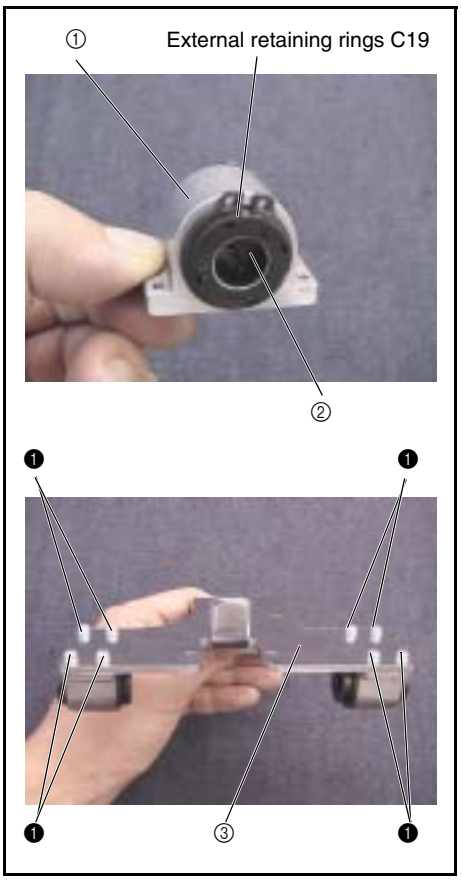

❶		Screw, Pan (S/P washer) M3X10DA Color; Gold	Torque 0.78 – 1.18 N-m

www.promelectroavtomat.ru

3 Y-carriage L assembly

1. Attach the linear bearing 10 ② to bearing case Y ①, and then attach the 2 external retaining rings C19. (2 sets)
2. Attach the 2 bearing case Y assemblies to Y-carriage L ③ with the 8 screws ❶.
3. Attach the X-motor assembly ④ to Y-carriage L with the 2 screws ❷.
4. Attach the caution (easy to bend) Y-carriage L with the 2 screws ❸.

NOTE

- The Y sensor dog bends easily. Handle it carefully.

5. Attach the connect PCB finial assembly ⑤ to Y-carriage L with the 2 screws ❹.

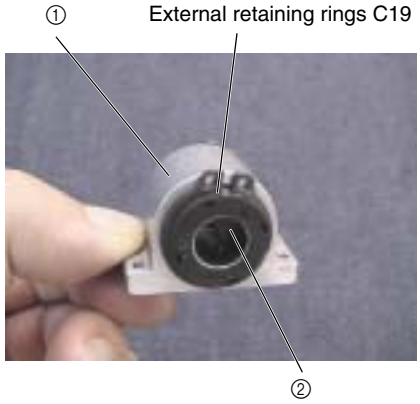

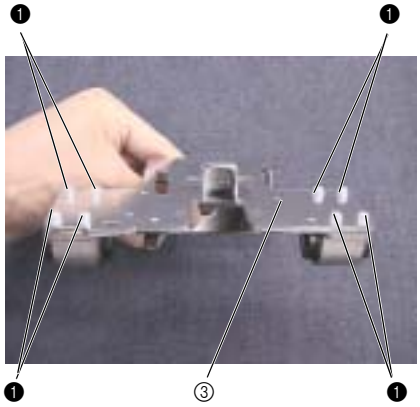

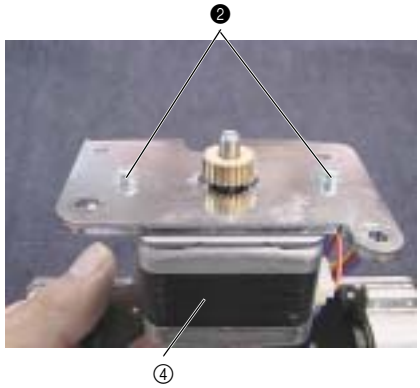

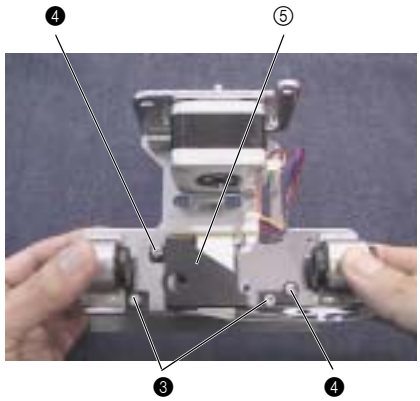

❶ ❷		Screw, Pan (S/P washer) M3X10DA Color; Gold	Torque 0.78 – 1.18 N-m
❸		Bolt, Socket M3X5 Color; Black	Torque 0.59 – 0.78 N-m
❹	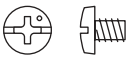	Screw, Bind M3X4 Color; Silver	Torque 0.59 – 0.78 N-m

www.promelectroavtomat.ru

4 Feed frame assembly attachment

1. Attach the 2 cap connections ① to the feed frame with the 4 screws ❶. (2 locations)
2. Temporarily attach the Y-carriage R assembly ② and the Y-carriage L assembly ③ to the feed frame assembly with the 4 screws ❷.
3. Attach the Y-driving gear pulley B ④, gear spring ⑤, Y-driving gear pulley A ⑥, washer, and plain washer (M6) (2 sets) to the gear pulley shaft, and then attach the retaining ring E4.

   ***Key point**
   - Attach the gear spring to the small hole ⑦ on Y-driving gear pulleys B and A.
   - Turn Y-driving gear pulley A clockwise until the large hole ⑧ on Y-driving gear pulley A is aligned with the large hole on Y-driving gear pulley B. Engage the pulleys with the X-motor gear, and attach them to the shaft.
4. Temporarily attach Y-carriage RB ⑨ to the feed frame and Y-carriage R with the 2 screws ❸.
5. Adjust the position of the X-motor assembly so that the backlash of the X-motor gear and the Y-driving gear pulley assembly is zero.

Start movie clip (CD-ROM version only)

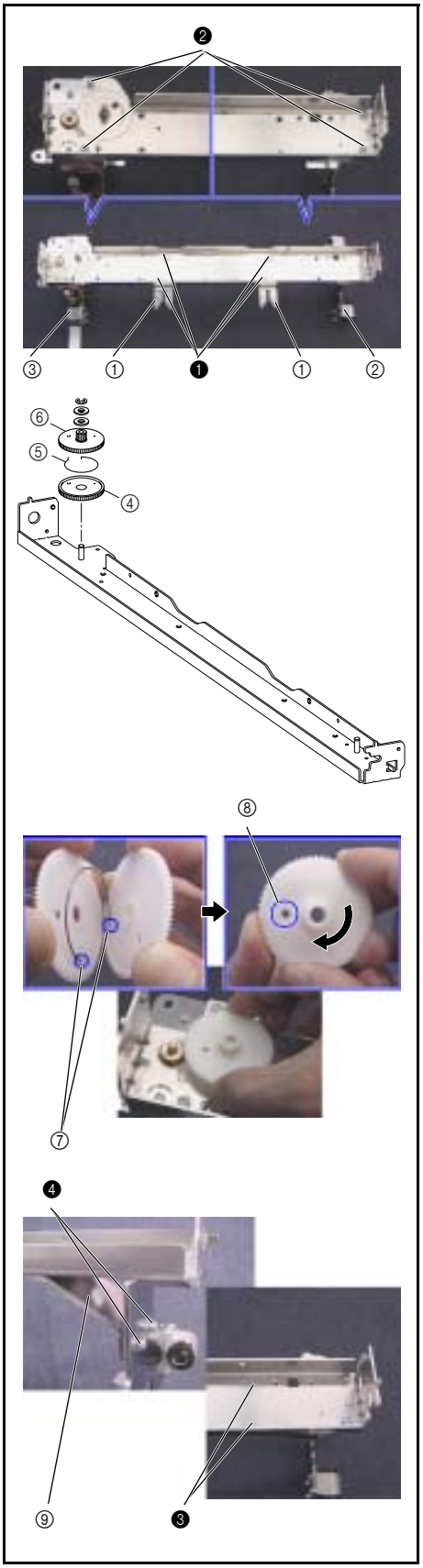

❶ ❸		Screw, Flat M3X6 Color;	Torque 0.78 – 1.18 N-m
❷ ❹		Screw, Pan (S/P washer) M4X8DB Color; Silver	Torque 1.18 – 1.57 N-m

www.promelectroavtomat.ru

5 T-belt (X-drive) attachment

1. Hang the T-belt B60S796 ③ over the Y driving gear pulley assembly ① and the tension pulley plate final assembly ②, and then secure the tension pulley plate final assembly to the feed frame assembly with the 2 screws ❶.

***Key point**

- Temporarily tighten the screws ❶ first. Firmly tighten them after completing 4 - 29 "X-belt tension adjustment."

❶	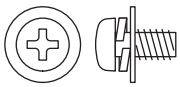	Screw, Pan (S/P washer) M4X8DB Color; Silver	Torque Hand start

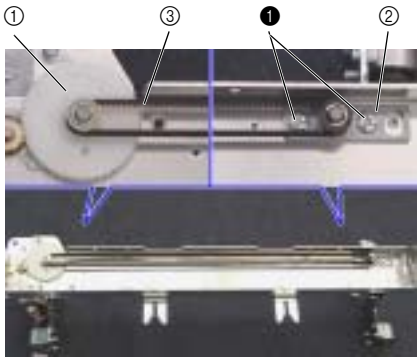

Assembly

www.promelectroavtomat.ru

6 X-guide shaft attachment

1. Attach the linear bearing (12) ② to bearing case X ①, and then attach the 2 external retaining rings C21. (2 sets)
2. Attach the X-roller ③ to the bearing case X assembly, and then attach the retaining ring E4. (2 sets)
3. Apply MOLYKOTE EM-30L grease to the shaft hole ④ on the bearing case.
4. Thread the 2 bearing case X final assemblies through the X-guide shaft ⑤, attach the X-guide shaft to the feed frame assembly, and then tighten the 2 nuts (2, M6) ⑥, 2 plain washers ⑦, and 2 spring washers (2-6) ⑧ to both ends of the X-guide shaft.

***Key point**

- Attach the X-guide shaft so that the end with a cut to prevent turning together is on the right side (Y-carriage R assembly side).

Start movie clip (CD-ROM version only)

Apply MOLYKOTE EM-30L grease to the shaft hole on the bearing case	Size of a bean
Tightening torque of nut (2, M6):	4.41 - 4.90

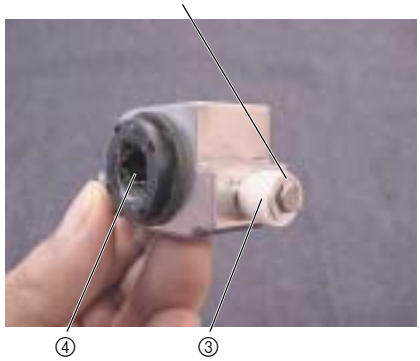

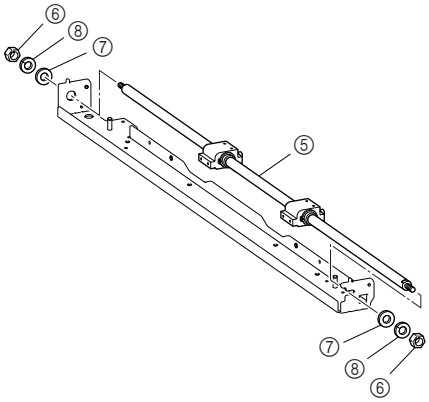

www.promelectroavtomat.ru

7 Hoop sensor attachment

1. Attach the spring S44 to the X-carriage A assembly.
2. Attach the hoop sensor assembly ② to the X-carriage A assembly with the nut ① and plain washer (S6), and then thread the hoop sensor assembly's shaft through the spring S44 .
3. Attach the hoop lever to the hoop sensor shaft, hanging the spring S44 over the hoop lever ③, and then tighten the screw ❶.
4. Tighten the screw ❷ from the rear side of the X-carriage A assembly (hoop sensor assembly side) while pushing down the hoop lever.

***Key point**

- Tighten the screw with the hoop lever pushed down so that it contacts the screw ❷ from the beneath after the screw has been tightened.
- Check operation after attachment.

Start movie clip (CD-ROM version only)

Tightening torque of nut:	1.18 - 1.57

❶		Set Screw, Socket (FT) M3X6 Color; Black	Torque 0.59 – 0.78 N-m
❷		Screw, Bind M3X12 Color; Silver	Torque 0.78 – 1.18 N-m
S44	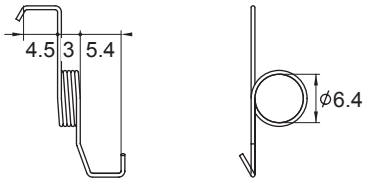		SPRING XC5802***

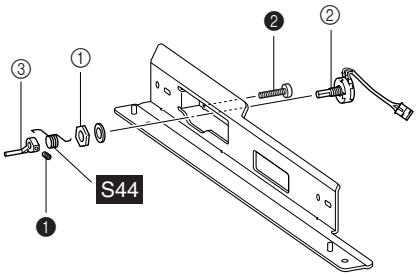

Assembly

www.promelectroavtomat.ru

8 X-sensor dog attachment

1. Attach the caution ① to the X-carriage ② with the 2 screws ❶.

   NOTE
   - The X sensor dog bends easily. Handle it carefully.

2. Bend the FFC (SML2CD-X) ③ 90 degrees at a point 60 mm from the tip.
3. Attach the FFC (SML2CD-X) and the sheet ④ to X-carriage B with the screw ❷.

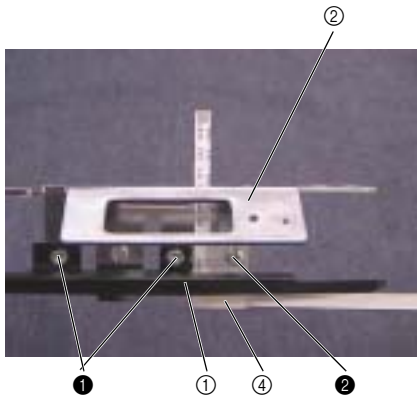

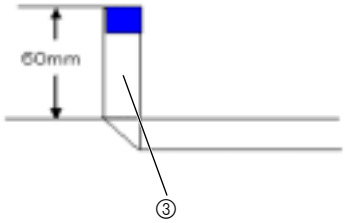

❶		Bolt, Socket M3X5 Color; Black	Torque 0.59 – 0.78 N-m
❷	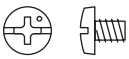	Screw, Bind M3X4 Color; Silver	Torque 0.59 – 0.78 N-m

www.promelectroavtomat.ru

9 X-carriage A assembly and X-carriage B assembly attachment

1. Attach the X-carriage B assembly ① to the 2 bearing case X final assemblies ② attached to the X-shaft with the 4 screws ❶.
2. Attach the hoop PCB assembly ③ to the X-carriage B assembly with the screw ❷.
3. Connect the FFC (SML2CD-X) ④ to the hoop PCB assembly, hold the FFC (SML2CD-X) with sheet C, and then tighten the screw ❸.

   ***Key point**
   - After the FFC (SML2CD-X) has been connected to the hoop PCB assembly, lock the connector.
4. Attach the X-carriage A assembly ⑤ to the bearing case X final assembly (2 locations) with the 4 screws ❹.
5. Connect the hoop sensor assembly's lead wire to the hoop PCB assembly.
6. Adjust the X-guide shaft ⑥ back and forth so that the X-carriage A assembly's sheet ⑦ contacts the feed frame.

Start movie clip (CD-ROM version only)

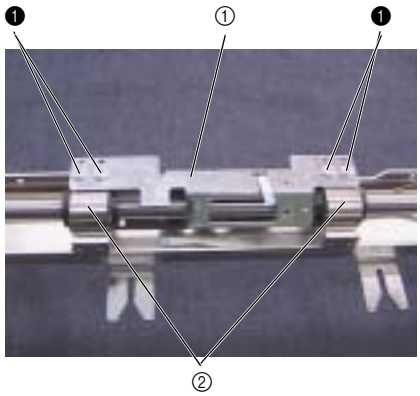

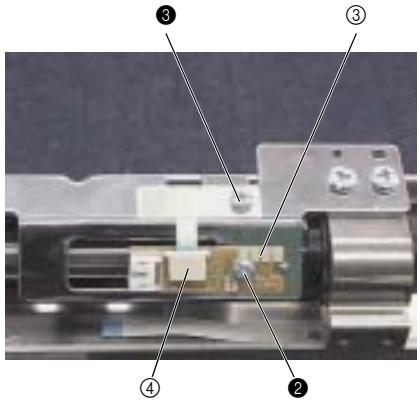

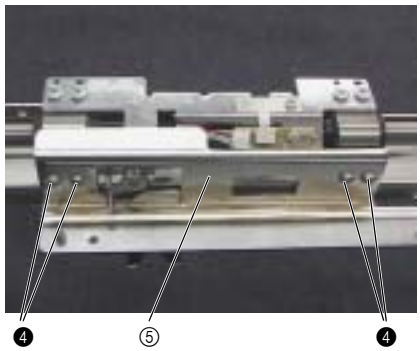

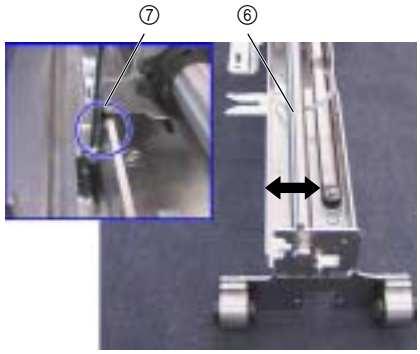

❶ ❹	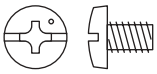	Screw, Bind M4X6 Color; Silver	Torque 1.18 – 1.57 N-m
❷		Screw, Pan (S/P washer) M3X6 Color; Silver	Torque 0.59 – 0.79 N-m
❸	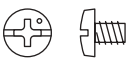	Screw, Bind M3X4 Color; Silver	Torque 0.59 – 0.78 N-m

www.promelectroavtomat.ru

10 X-feed frame B attachment

1. Apply MOLYKOTE EM-30L grease to the surface ① where the X-feed frame contacts the X-roller.
2. Attach the X-feed frame B ② to the feed frame assembly with the 4 screws (① ②, 2 each).

***Key point**

- No clearance is allowed between X-carriage A and the feed frame.
- No clearance is allowed between the X-roller and X-feed frame B.

Start movie clip (CD-ROM version only)

Apply MOLYKOTE EM-30L grease to the surface where the X-feed frame contacts the X-roller.	Size of a bean

❶	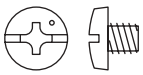	Screw, Bind M4X4 Color; Silver	Torque 1.18 – 1.57 N-m
❷	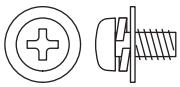	Screw, Pan (S/P washer) M4X8DB Color; Silver	Torque 1.18 – 1.57 N-m

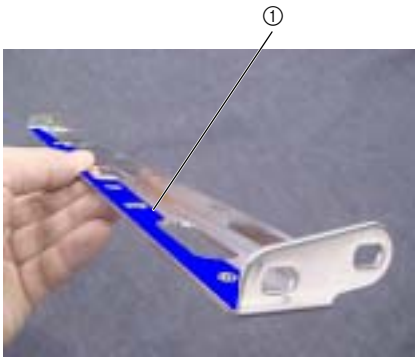

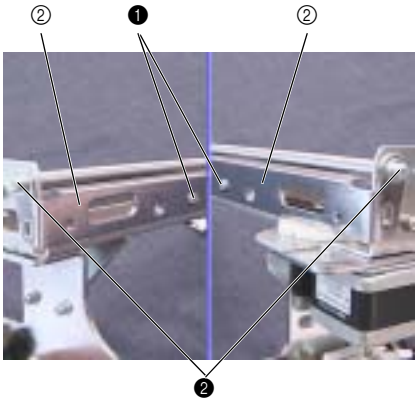

www.promelectroavtomat.ru

11 Y-frame spacer and X-belt presser attachment

1. Attach the 2 Y-frame spacers ① to X-carriage B with the 4 screws ❶.
2. Align the X-belt presser ② with the highest point of the T-belt, and then attach the X-belt presser to X-carriage B. Secure them with the screw ❷.

❶	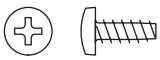	Taptite, Bind B M3X8 Color; Gold	Torque 0.39 – 0.78 N-m
❷		Screw, Pan (S/P washer) M4X8DA Color; Silver	Torque 0.78 – 1.18 N-m

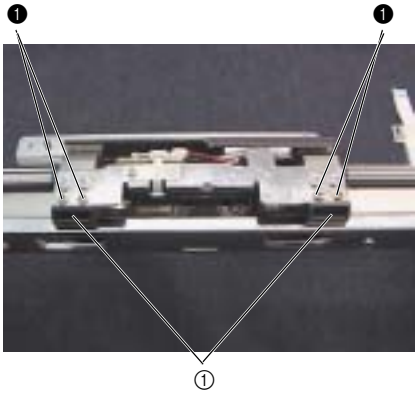

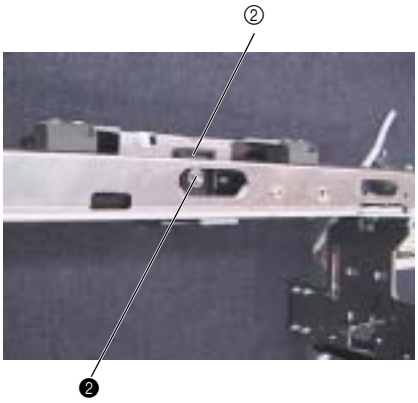

Assembly

www.promelectroavtomat.ru

12 FFC and X-area sensor assembly attachment

1. Bend the free end of the FFC (SML2CD-X) connected to the hoop PCB assembly 90 degrees at two points, connect it to the X-area sensor assembly ①, and lock the connector.
2. Connect the FFC (SML2CD-C) ② to the X-area sensor assembly, and lock the connector.
3. Attach the X-area sensor assembly and the X-frame spacer ③ to the feed frame assembly with the screw ❶.
4. Hold the FFC (SML2CD-X) with sheet B ④, and secure the FFC to the feed frame assembly with the 2 screws ❷.
5. Thread the FFC (SML2CD-C) through the slot ⑤ on the feed frame assembly.
6. Hold the FFC (SML2CD-C) with sheet C ⑥, and secure the FFC to the feed frame assembly with the screw ❸.

Start movie clip (CD-ROM version only)

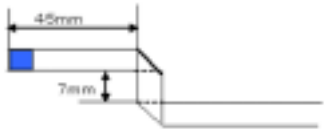

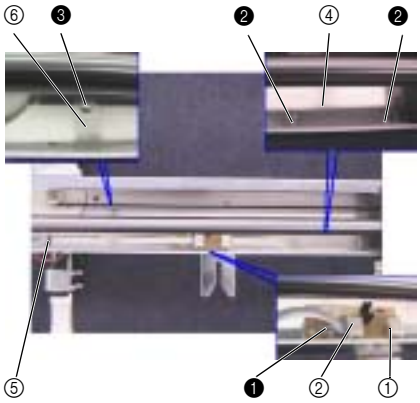

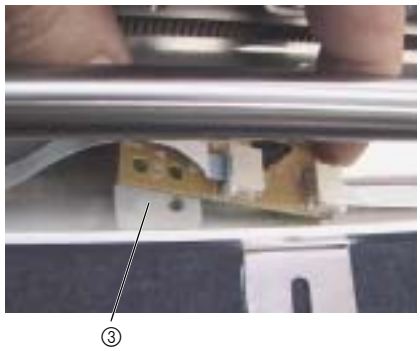

❶		Screw, Pan (S/P washer) M3X10 Color; Silver	Torque 0.59 – 0.78 N-m
❷ ❸	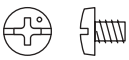	Screw, Bind M3X4 Color; Silver	Torque 0.59 – 0.78 N-m

www.promelectroavtomat.ru

13 Cord grip attachment

1. Connect the FFC (SML2CD-C) ① to the connect PCB, and lock the connector.
2. Connect the X-feed motor's lead wire to the connect PCB.
3. Bind the X-feed motor's lead wire and the FFC (SML2CD-C) with the cord grip ②, and then tighten the screw ❶.

***Key point**

- Insert the X-feed motor's lead wire into the groove ③ on Y-carriage L.

Start movie clip (CD-ROM version only)

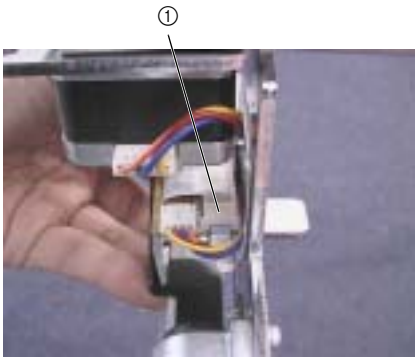

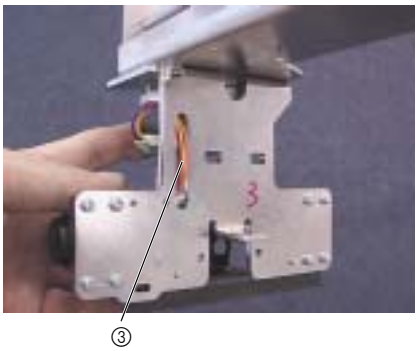

❶	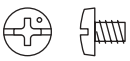	Screw, Bind M3X4 Color; Silver	Torque 0.59 – 0.78 N-m

Assembly

www.promelectroavtomat.ru

14 Y driving shaft assembly attachment

1. Apply turbine oil to the 2 felts ①.
2. Attach the felts to the metal collars on the base frame. (2 locations)
3. Attach the Y driving shaft assembly ② to the base frame.
4. Secure the 2 metal pressers A ③ with the 2 screws ❶.
5. Adjust the collar's ④ position (right/left) to eliminate any backlash in the shaft direction, and then secure the collar with the 2 screws ❷.
6. Apply sewing-machine oil to the Y driving shaft's 2 metals.

Start movie clip (CD-ROM version only)

Apply turbine oil to the felts.	Soak the felts in turbine oil.
Apply sewing-machine oil to the Y driving shaft's metals.	1 to 2 drops

❶	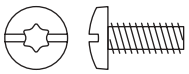	Taptite, Bind S M4X10 Color; Gold	Torque 1.47 – 1.96 N-m
❷		Set Screw, Socket (CP) M4X4 Color; Black	Torque 0.78 – 1.18 N-m

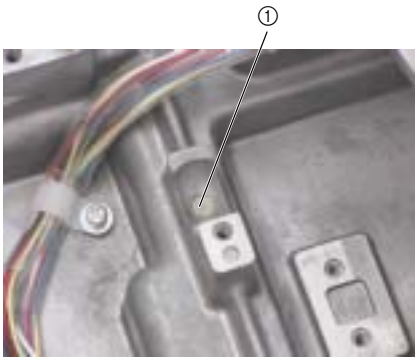

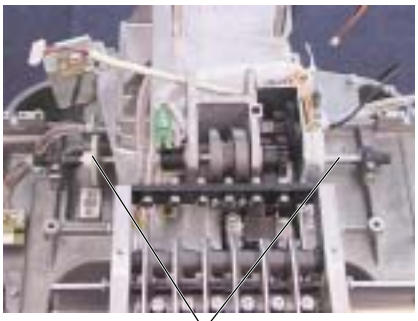

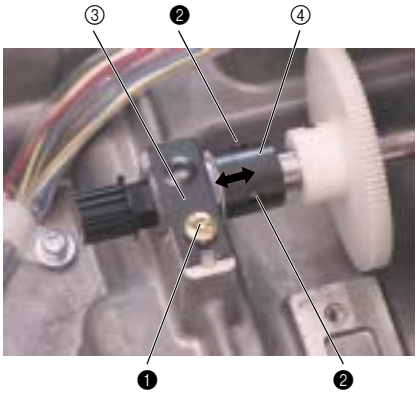

www.promelectroavtomat.ru

15 Y-motor final assembly

1. Attach the Y-motor final assembly ① to the Y-motor stay ② with the 2 screws ❶.

❶		Screw, Pan (S/P washer) M3X6DA Color; Gold	Torque 0.59 – 0.78 N-m

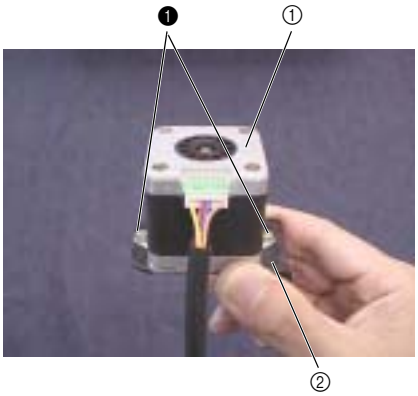

www.promelectroavtomat.ru

16 Y motor final assembly attachment

1. Attach the Y motor final assembly ① to the base frame with the 2 screws ❶.

   ***Key point**
   - Adjust the backlash of the Y motor gear and the Y-guide shaft gear to zero.
   - Make sure the Y motor gear and the Y-guide shaft gear are parallel.
2. Apply MOLYKOTE EM-30L grease to the Y motor gear ②.
3. Secure the Y motor final assembly's lead wire and the cord clamp NK-4N to the base frame with the screw ❷.

Apply MOLYKOTE EM-30L grease to the Y motor gear.	Size of a grain of rice

❶	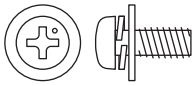	Screw, Pan (S/P washer) M4X10DB Color; Silver	Torque 1.18 – 1.67 N-m
❷		Screw, Pan (S/P washer) M4X8DA Color; Silver	Torque 1.18 – 1.57 N-m

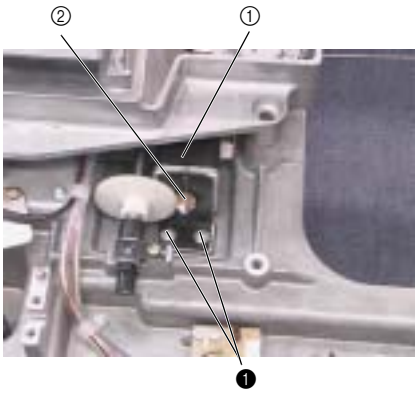

www.promelectroavtomat.ru

17 Feed final assembly attachment

1. Attach the 2 Y-guide shafts ① to the feed final assembly, and then attach the feed final assembly to the base frame.
2. Secure the 2 fixed Y-shaft plates with the 4 screws ❶ (one each on left and right).
3. Pull the feed final assembly toward you.
4. Connect the FFC (SML2CD-Y) connected to the feed final assembly's connect PCB to the Y-area sensor assembly ②, and lock the connector.
5. Attach the sheet ③, FFC (SML2CD-Y), and sheet B ④ to the base frame with the screw ❷.

Start movie clip (CD-ROM version only)

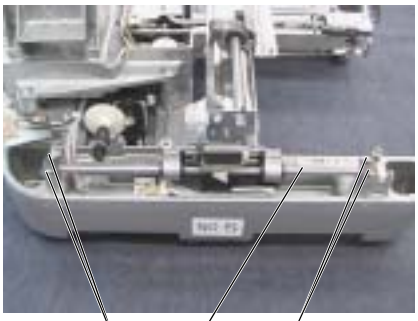

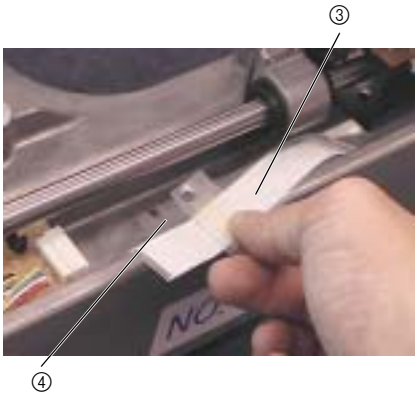

❶	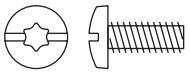	Taptite, Bind S M4X10 Color; Gold	Torque 1.47 – 1.96 N-m
❷		Screw, Bind M4X6 Color; Silver	Torque 1.18 – 1.57 N-m

www.promelectroavtomat.ru

18 T-belt (Y-guide) attachment

1. Attach the Y tension pulley ① and the plain washer 7 X 2 to the Y tension plate assembly, and then attach the 2 sets of retaining rings E4.
2. Loosen the 2 screws ② securing the Y driving shaft pulley.
3. Hang the T-belt B60S3M579 over the Y tension plate assembly's Y tension pulley and the Y-guide shaft's pulley ③, and then attach the Y tension plate assembly to the base frame with the 2 screws ❶ (one each on left and right).

   ***Key point**
   - Temporarily tighten the screws ❶ first. Firmly tighten them after completing 4 - 28 "Y-belt tension adjustment."
4. Align the Y-belt presser ④ with the T-belt's highest point, attach the Y-belt presser to the Y-carriage, and then secure them with the 2 screws ❷.
5. Firmly tighten the 2 screws to secure the Y driving shaft pulley.

Start movie clip (CD-ROM version only)

Tightening torque of screw:	0.78 - 1.18

❶	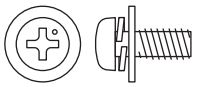	Screw, Pan (S/P washer) M4X10DB Color; Silver	Torque Hand start
❷	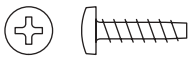	Taptite, Bind P M3X12 Color; Gold	Torque 0.59 – 0.78 N-m

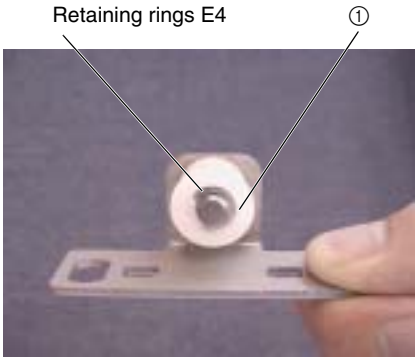

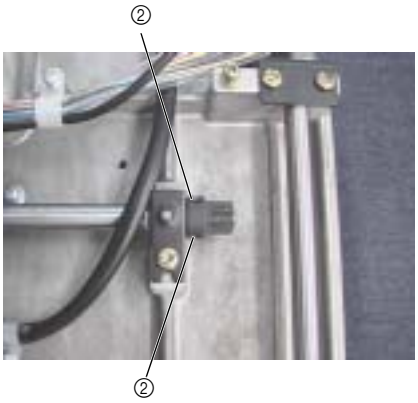

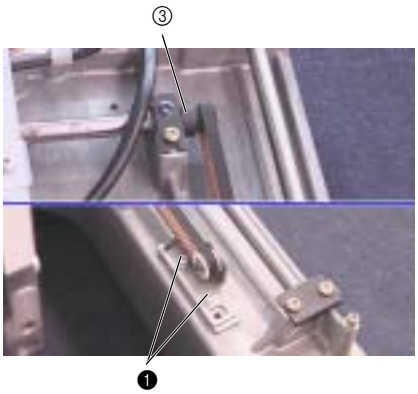

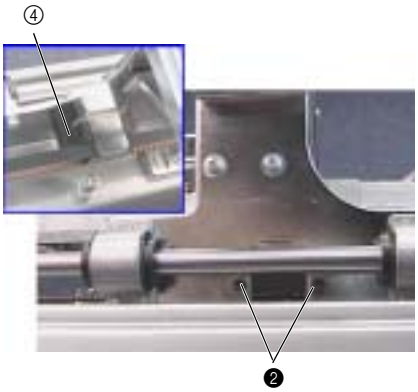

www.promelectroavtomat.ru

Main unit

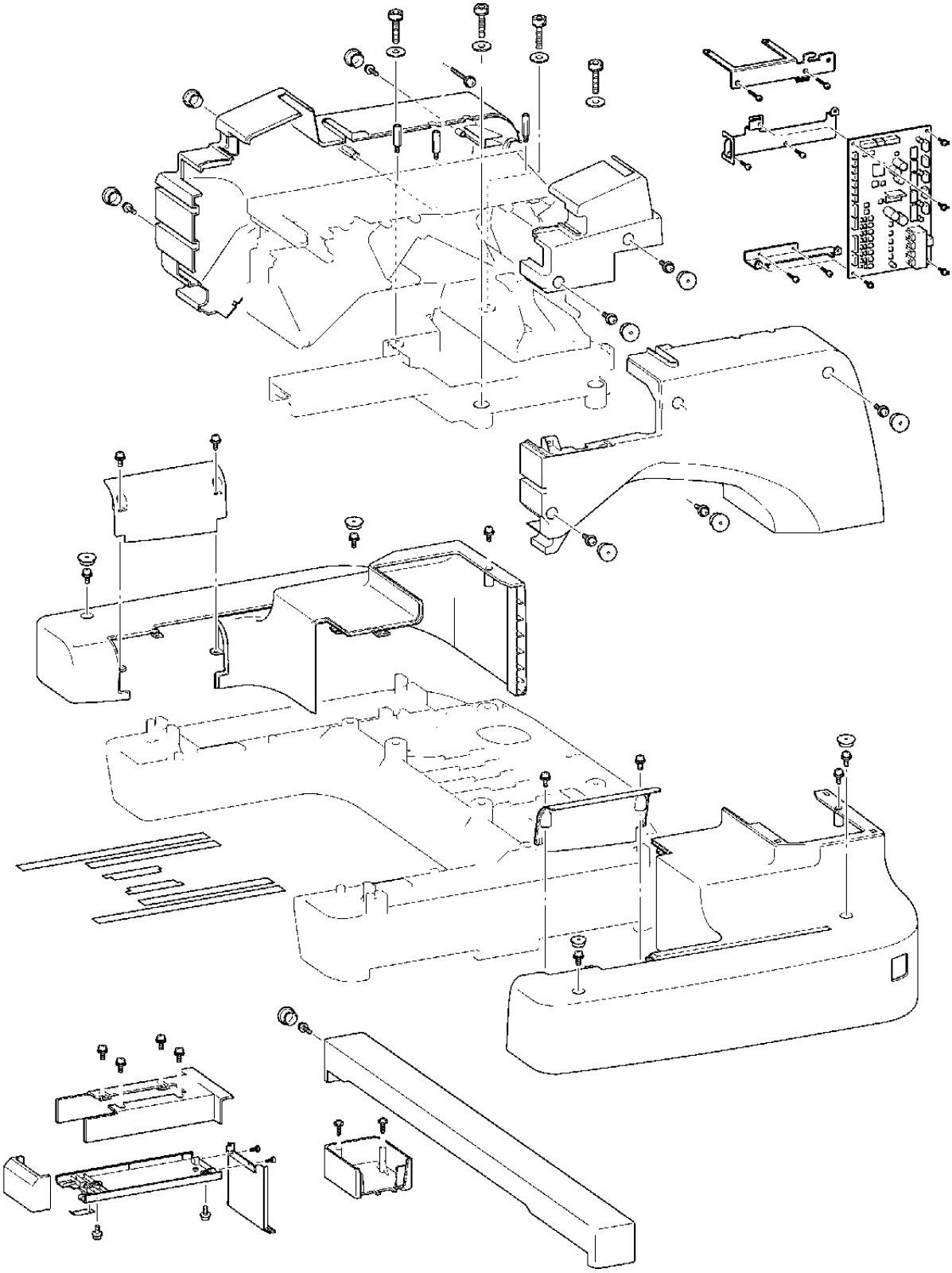

www.promelectroavtomat.ru

1 Cutter unit final assembly and picker final assembly attachment

1. Attach the cutter unit final assembly ① to the arm bed with the 2 screws ❶.
2. Attach the picker final assembly ② to the arm bed with the 2 screws ❷.

   ***Key point**
   - Fully draw the feed final assembly toward you before attaching the cutter unit final assembly and the picker final assembly.
   - Be careful not to bend the picker link ③ when threading it through the hole on the arm bed to the needle plate side.
3. Thread the cutter unit final assembly's lead wire and the picker final assembly's lead wire through the spiral tube D ④, and then attach them to the arm bed with the screw ❸ and cord clamp NK-5N.

Start movie clip (CD-ROM version only)

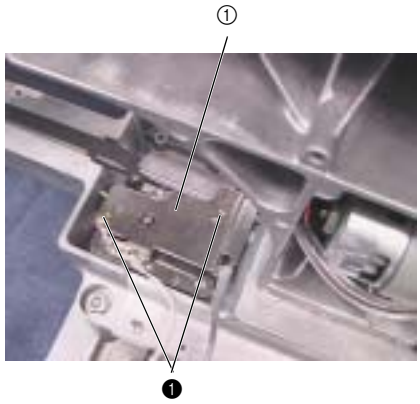

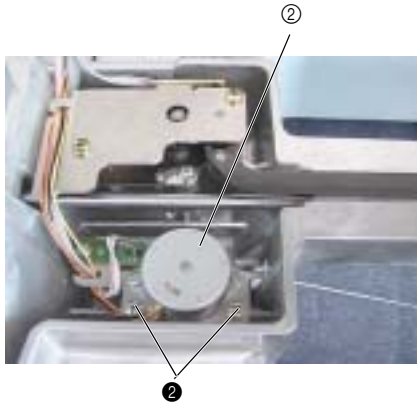

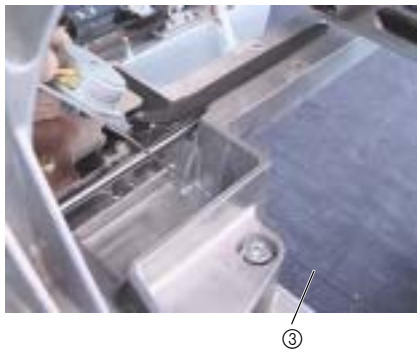

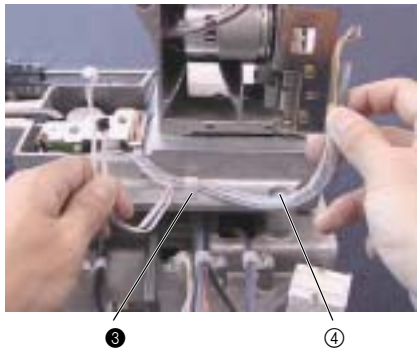

❶ ❷	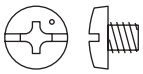	Screw, Bind M4X4 Color; Silver	Torque 1.18 – 1.57 N-m
❸	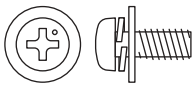	Screw, Pan (S/P washer) M4X10DB Color; Silver	Torque 0.78 – 1.18 N-m

www.promelectroavtomat.ru

2 Rotary hook attachment

1. Attach the rotary hook ① to the lower shaft with the 3 screws ❶.

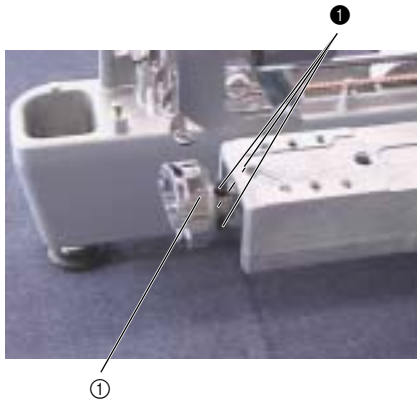

❶		Foot set screw 4.46□ Color;	Torque 0.78 – 1.18 N-m

3 Picker bracket final assembly

1. Apply MOLYKOTE EM-30L grease to the picker assembly's shaft ①.
2. Attach the picker holder ② to the picker bracket with the screw ❶.
3. Attach the picker assembly and the spring S54 to the picker bracket ③, and then attach the retaining ring E2.

Start movie clip (CD-ROM version only)

Apply MOLYKOTE EM-30L grease to the picker assembly's shaft.	Size of a grain of rice

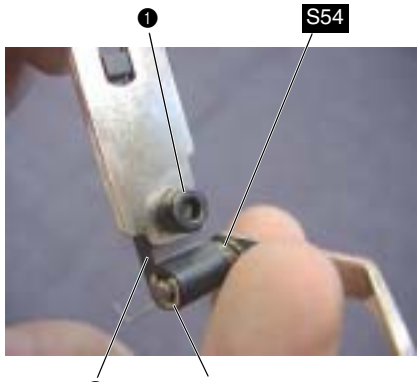

S54	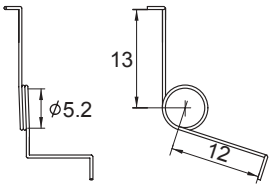	PICKER SPRING XC5853***

4 Picker bracket final assembly attachment

1. Attach the picker bracket final assembly ① to the arm bed with the 2 screws ❶.
2. Attach the picker link ② to the picker assembly's picker link attachment shaft, and then attach the retaining ring E2.

Start movie clip (CD-ROM version only)

❶		Screw, Bind M4X6 Color; Silver	Torque 1.18 – 1.57 N-m

www.promelectroavtomat.ru

5 Needle plate base assembly

***Key point**

- After assembling the needle plate base, be sure to do 4 - 35 "Cutter knife engagement adjustment."

1. Attach the thread holding plate ① to the needle plate base assembly with the screw ❶.
2. Attach the fixed knife ② to the needle plate base assembly with the screw ❷.

***Key point**

- Tighten the screw ❷ while pushing the fixed knife against the pin ③ on the needle plate base assembly.

3. Attach the movable knife ④ and the movable knife collar ⑤ to the needle plate base assembly with the screw ❸.
4. Attach the rotary hook stopper ⑥ to the needle plate base assembly with the screws (❹ ❺).

***Key point**

- Temporarily tighten the screws ❹ and ❺ first. Firmly tighten them after completing 4 - 22 "Rotary hook stopper clearance adjustment."

Start movie clip (CD-ROM version only)

❶ ❷ ❺		Screw, P/F Color;	Torque 0.78 – 1.18 N-m
❸		Screw M4□ Color;	Torque 0.78 – 1.18 N-m
❹		Bolt, Socket M3X6 Color; Black	Torque Hand start

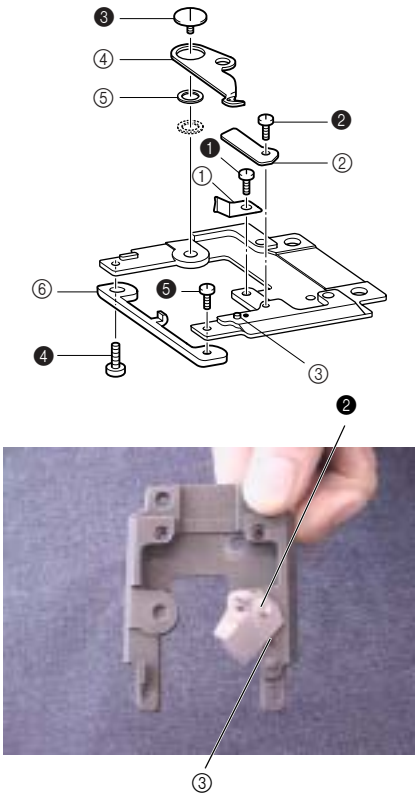

www.promelectroavtomat.ru

6 Needle plate base assembly attachment

1. Attach the needle plate base assembly ① to the arm bed with the 2 screws ❶.

   ***Key point**
   - Attach the needle plate base assembly ① so that it is parallel to the arm bed.

2. Attach the cutter link assembly's shaft ② while aligning it with the hole on the movable knife.
3. Connect the cutter unit's lever link assembly ③ to the cutter link assembly with the 2 screws ❷.

   ***Key point**
   - Temporarily tighten the screws ❷ first. Firmly tighten them after completing 4 - 31 "Movable knife origin adjustment."

Start movie clip (CD-ROM version only)

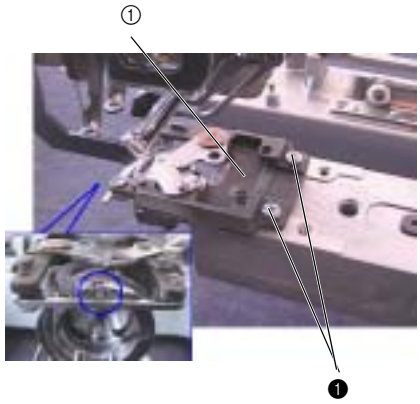

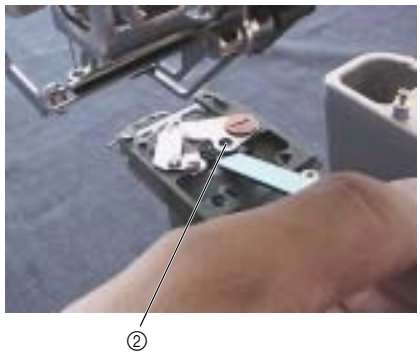

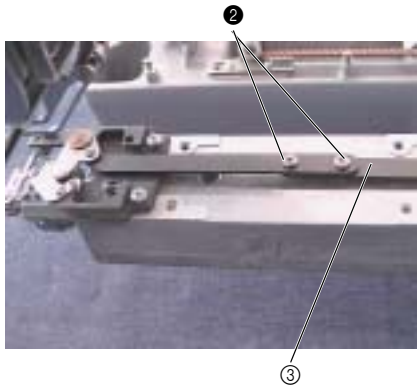

❶		Screw, Pan M4X8 Color; Silver	Torque 1.18 – 1.57 N-m
❷		Screw, Bind M3X4 Color; Silver	Torque Hand start

7 Needle plate attachment

1. Attach the needle plate to the needle plate base assembly with the 2 screws ❶.

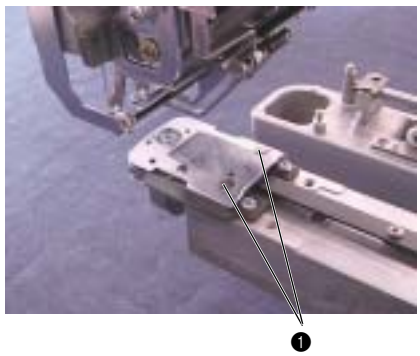

❶		Screw M4 Color; Silver	Torque 0.78 – 1.18 N-m

www.promelectroavtomat.ru

8 Tension base attachment

1. Attach the tension base assembly ① to the needle bar case final assembly with the 4 screws ❶.
2. Attach the cord clamp (NK-4N) to the tension base cord at a point 125 mm from the tension base, and secure it to the arm bed with the screw ❷.

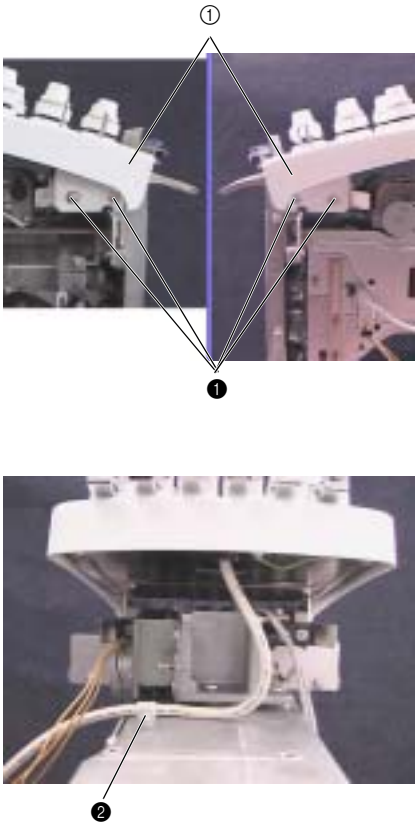

❶	Screw, Bind M4X6 Color; Silver	Torque 1.18 – 1.57 N-m
❷	Screw, Pan (S/P washer) M4X10DB Color; Silver	Torque 0.78 – 1.18 N-m

www.promelectroavtomat.ru

9 Thread take-up lever cover attachment

1. Attach the thread take-up lever cover ① to the tension base assembly ② with the 2 screws ❶.

***Key point**

- Place the 2 tabs on the upper section of the thread take-up lever cover over the 2 holes ③ on the operator's side of the tension base assembly, and then align the pin on the left side of the needle bar case final assembly with the groove ④ on the inner left side of the thread take-up lever cover.

Start movie clip (CD-ROM version only)

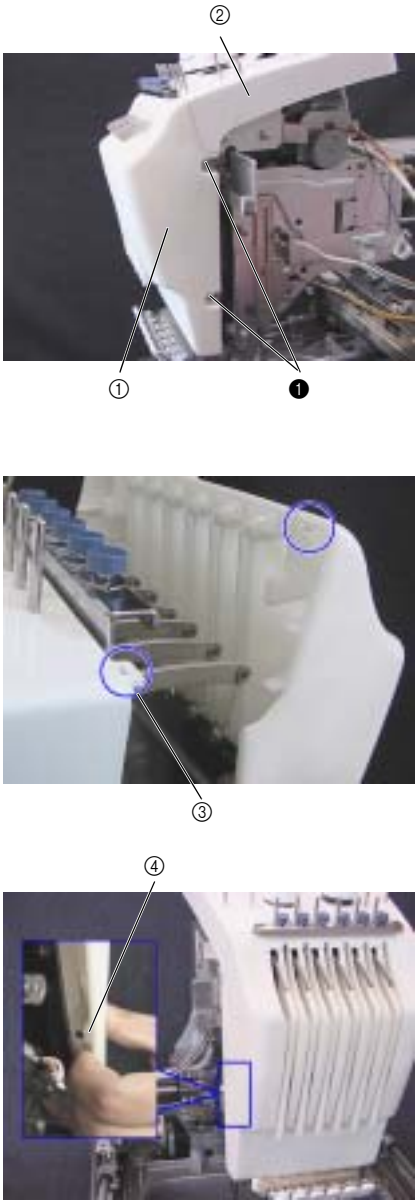

❶	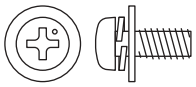	Screw, Pan (S/P washer) M4X10DB Color; Silver	Torque 1.18 – 1.57 N-m

10 Operation panel assembly attachment

1. Attach the operation panel assembly ① with the 6 screws ❶.

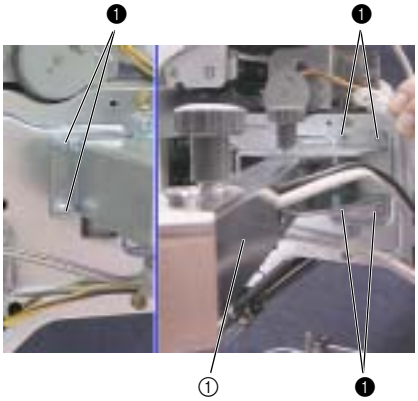

❶	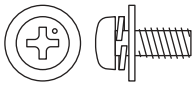	Screw, Pan (S/P washer) M4X10DB Color; Silver	Torque 1.18 – 1.57 N-m

www.promelectroavtomat.ru

11 Spool stand frame final assembly attachment

1. Attach the 3 studs ① to the top face of the arm bed.
2. Attach the spool stand frame final assembly ② to the 3 studs with the 3 screws ❶.

Tightening torque of stud:	1.18 - 1.57

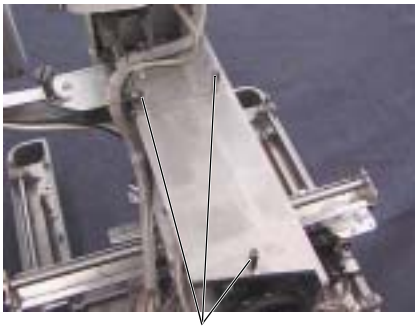

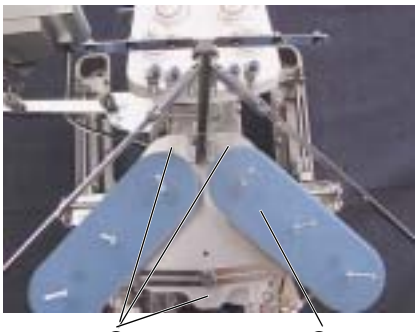

❶	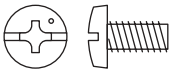	Screw, Bind M4X8 Color; Silver	Torque 1.18 – 1.57 N-m

www.promelectroavtomat.ru

12 Main PCB assembly attachment

1. Attach the board holder U ① and the board holder D ② with the 4 screws ❶.
2. Attach the main PCB assembly ③ with the 4 screws ❷.
3. Connect the lead wires.

Start movie clip (CD-ROM version only)

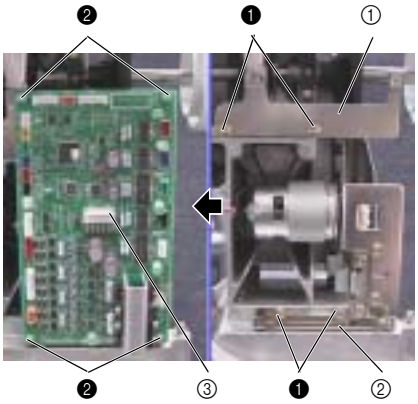

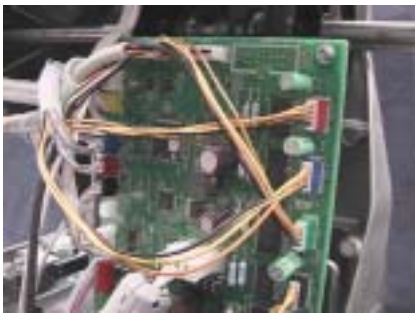

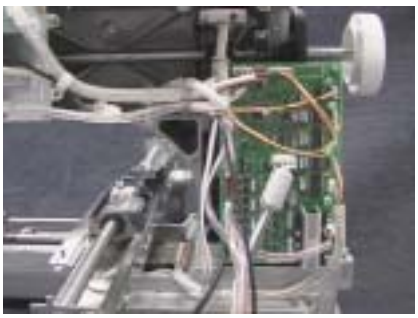

❶	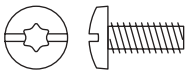	Taptite, Bind S M4X10 Color; Gold	Torque 1.47 – 1.96 N-m
❷		Screw, Pan (S/P washer) M3X6 Color; Silver	Torque 0.59 – 0.78 N-m

www.promelectroavtomat.ru

13 Oil box holder attachment

1. Attach the oil box holder ① to the arm bed with the 2 screws ❶.

❶	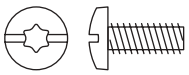	Taptite, Bind S M4X10 Color; Gold	Torque 1.47 – 1.96 N-m

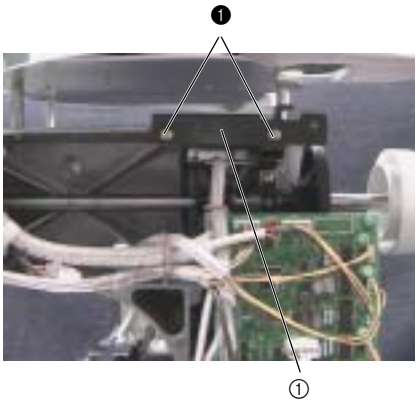

14 Base cover L attachment

1. Attach the groove cover A ② and the groove cover B ③ to the rear of the base cover L ①.
2. Attach the groove cover C ⑤ to the rear of the base cover L lid ④.
3. Attach the base cover L with the 3 screws ❶.

   ***Key point**
   - Fully draw the X-guide toward you before attachment.
4. Attach the base cover L lid to the base cover L with the 2 screws ❷.
5. Attach the 2 screw covers.

Start movie clip (CD-ROM version only)

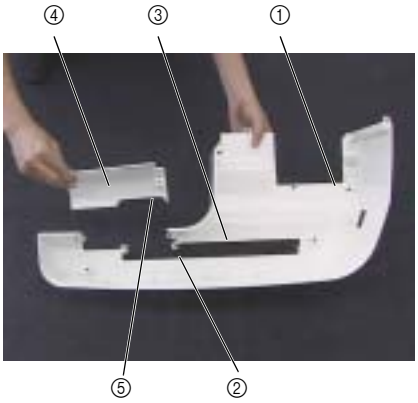

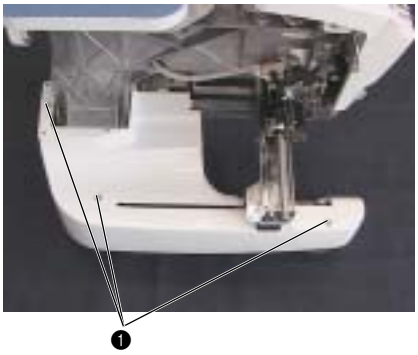

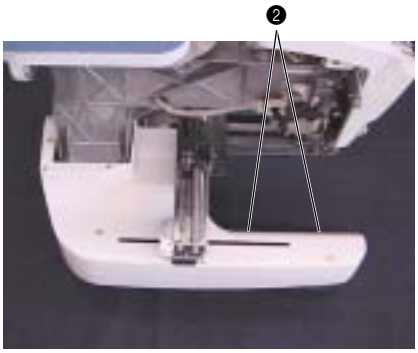

❶ ❷	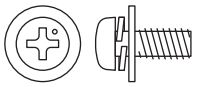	Screw, Pan (S/P washer) M4X10DB Color; Silver	Torque 0.78 – 1.18 N-m

www.promelectroavtomat.ru

15 Base cover R attachment

1. Attach the groove cover A ② and the groove cover B ③ to the rear of the base cover R ①.
2. Attach the groove cover C ⑤ to the rear of the base cover R lid ④.
3. Attach the base cover R with the 3 screws ❶.

   ***Key point**
   - Fully draw the X-guide toward you before attachment.
4. Attach the base cover R lid to the base cover R with the 2 screws ❷.
5. Attach the 2 screw covers.

Start movie clip (CD-ROM version only)

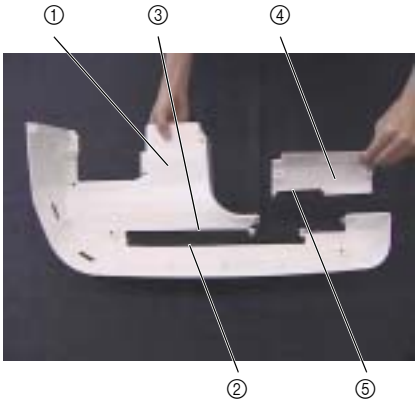

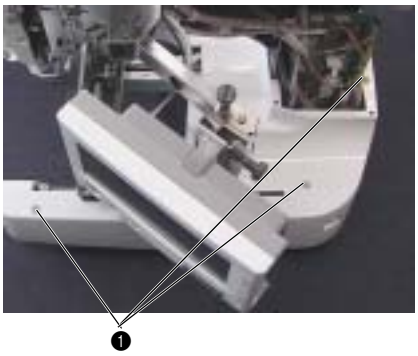

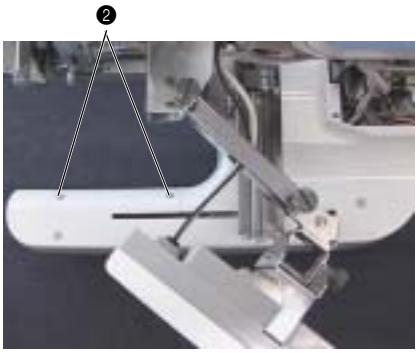

❶ ❷		Screw, Pan (S/P washer) M4X10DB Color; Silver	Torque 0.78 – 1.18 N-m

Assembly

16 Arm cover L attachment

1. Attach the arm cover L ① with the 3 screws ❶ and ❷.
2. Attach the 3 screw covers.

Start movie clip (CD-ROM version only)

❶	Screw, Pan (S/P washer) M4X10DB Color; Silver	Torque 0.78 – 1.18 N-m
❷	Taptite, Cup B M4X14 Color; Silver	Torque 0.78 – 1.18 N-m

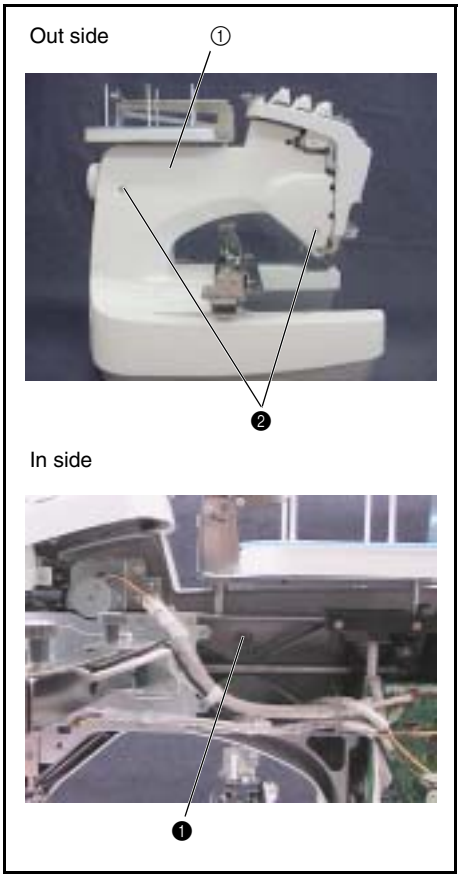

www.promelectroavtomat.ru

17 Arm cover R attachment

1. Attach the arm cover R ① with the 3 screws ❶.
2. Attach the arm cover R lid ② with the 2 screws ❷.

   ***Key point**
   - Remove the operation panel assembly's thumb bolt M4S ③ before attaching the arm cover R lid.

3. Attach the 5 screw covers.

Start movie clip (CD-ROM version only)

❶ ❷	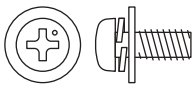	Screw, Pan (S/P washer) M4X10DB Color; Silver	Torque 0.78 – 1.18 N-m

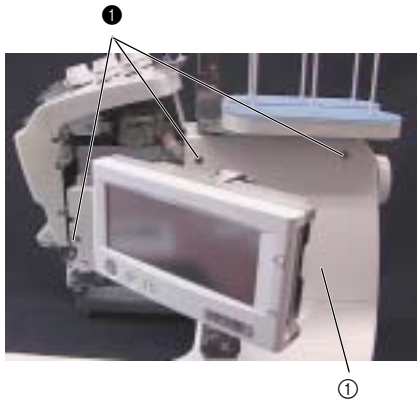

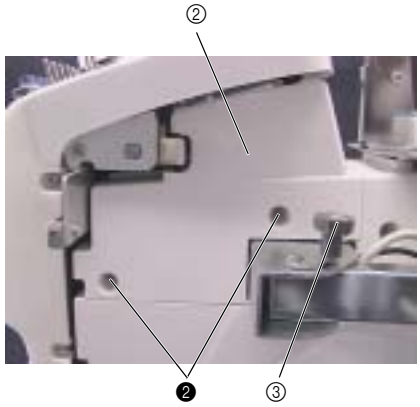

Assembly

www.promelectroavtomat.ru

18 Bed cover attachment

1. Attach the bed cover ① and the bed cover top ② to the arm bed with the 4 screws ❶.
2. Attach the spring ④ and the hinged door ⑤ to the bed cover bottom ③.
3. Attach the bed cover lid ⑦ to the bed cover bottom assembly ⑥ with the 2 screws ❷.
4. Attach the bed cover bottom assembly to the arm bed with the 2 screws ❸.

Start movie clip (CD-ROM version only)

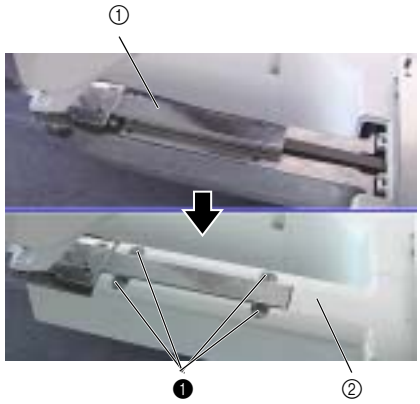

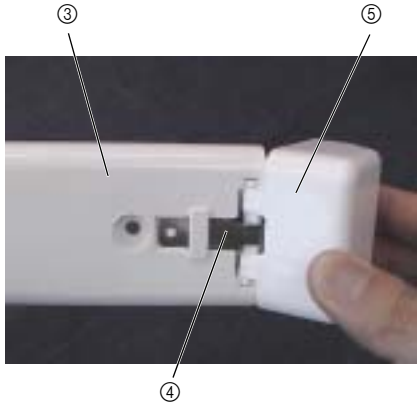

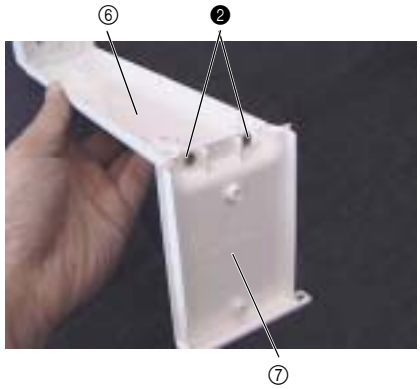

❶ ❸		Screw, Pan (S/P washer) M4X10DB Color; Silver	Torque 0.78 – 1.18 N-m
❷	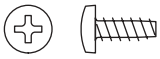	Taptite, Bind B M3X8 Color; Gold	Torque 0.39 – 0.78 N-m

www.promelectroavtomat.ru

19 Motor cover / carriage cover attachment

1. Attach the motor cover ① with the 2 screws ❶.
2. Attach the carriage cover ② to the X-guide with the screw ❷.
3. Attach the screw cover.

Start movie clip (CD-ROM version only)

❶	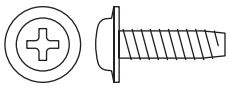	Taptite, Cup B M4X14 Color; Silver	Torque 0.78 – 1.18 N-m
❷	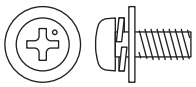	Screw, Pan (S/P washer) M4X10DB Color; Silver	Torque 0.78 – 1.18 N-m

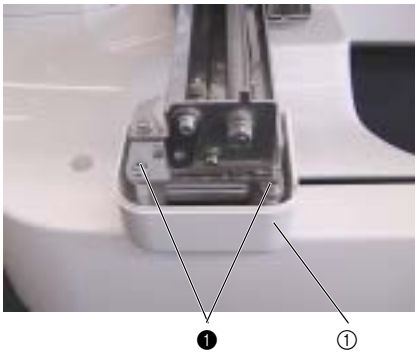

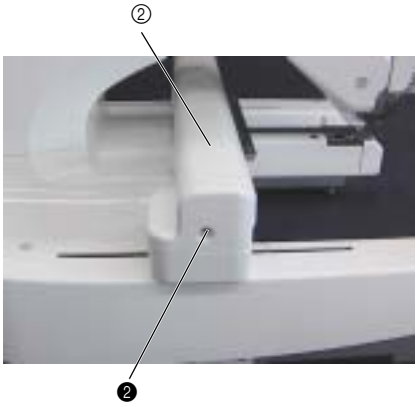

Assembly

www.promelectroavtomat.ru

www.promelectroavtomat.ru

4 Adjustment

Precaution	Adjustment flow	4 - 2
Inspection	Bent needle	4 - 3
	Blunt needle	4 - 4
Test mode	Starting test mode / Selecting adjustment test mode	4 - 5
	Main board test mode	4 - 6
	Panel board test mode	4 - 12
	How to read needle bar numbers on bar code	4 - 15
Adjustment	Motor belt tension adjustment	4 - 16
	Timing belt tension adjustment	4 - 17
	Needle position adjustment (front/back)	4 - 18
	Needle position adjustment (right/left)	4 - 19
	Needle bar rising length and needle space adjustment	4 - 20
	Needle bar height adjustment	4 - 21
	Rotary hook stopper clearance adjustment	4 - 22
	Presser foot height adjustment	4 - 23
	Needle bar top dead center adjustment	4 - 24
	Needle threader adjustment (up/down)	4 - 25
Check	Needle threader adjustment (right/left)	4 - 26
Adjustment	Needle threading check	4 - 27
	Y-belt tension adjustment	4 - 28
	X-belt tension adjustment	4 - 29
	Picker activation adjustment	4 - 30
	Movable knife origin adjustment	4 - 31
	Thread presser base up/down position adjustment	4 - 32
	Hoop sensor adjustment	4 - 33
	XY-guide origin adjustment	4 - 34
	Cutter knife engagement adjustment	4 - 35

www.promelectroavtomat.ru

Precaution	Adjustment flow

The following adjustment items are inter-related. This means that adjusting one of them will affect the adjusted values of the subsequent items. Be sure to adjustment these items according to the flow below.

1. Needle position adjustment (front/back) 4-18

⇩

2. Needle position adjustment (right/left) 4-19

⇩

3. Needle bar rising length and needle space adjustment 4-20

⇩

4. Needle bar height adjustment 4-21

⇩

5. Rotary hook stopper adjustment 4-22

When only "Rotary hook stopper adjustment" is performed, adjustment of the subsequent items

⇩

6. Presser foot height adjustment 4-23

⇩

7. Needle bar top dead center adjustment 4-24

⇩

8. Needle threader adjustment (up/down) 4-25

⇩

9. Needle threader adjustment (right/left) 4-26

www.promelectroavtomat.ru

Inspection	Bent needle

1. Place the needle on the surface plate (level block) to check that the needle is not bent.

***Key point**

- Check all six needles.

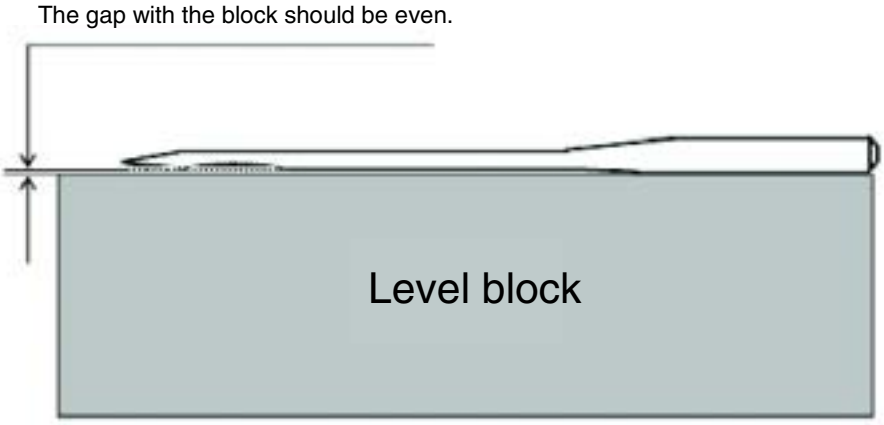

www.promelectroavtomat.ru

Inspection	Blunt needle

1. Touch the needle tip with your finger to check that the needle tip is not blunt.

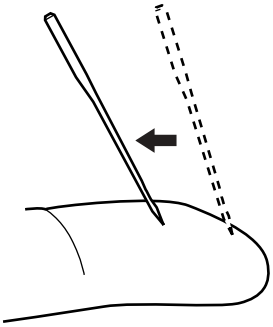

www.promelectroavtomat.ru

Starting test mode

1. Turn the [POWER] switch on with the [START/STOP] button, [THREAD CUT] button, [THREAD GUIDE] button simultaneously held down.

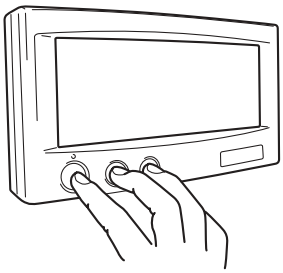

Selecting adjustment test mode

1. Select the desired adjustment mode by pressing the corresponding mode key displayed on the screen.

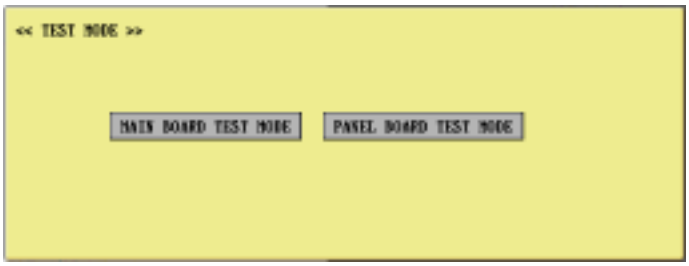

TEST MODE

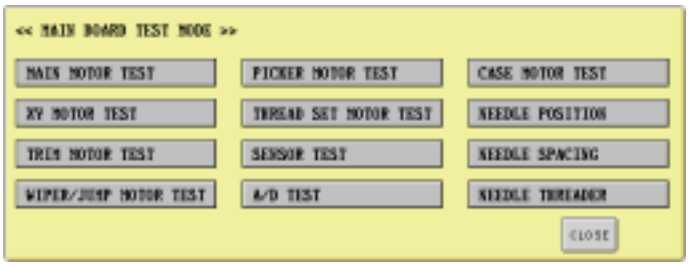

MAIN BOARD TEST MODE

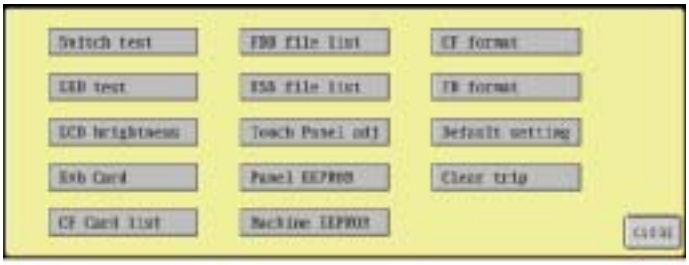

PANEL BOARD TEST MODE

Inspection and Adjustment

www.promelectroavtomat.ru

Test Mode Operation Manual

NOTE •Note: After replacing the main board, you must set the picker motor over-pulses (See 8. in this manual) and adjust the frame sensor (See 11. in this manual).

1. Hold down the three mechanical switches on the operation panel ([START/STOP], [THREAD CUT], [THREAD GUIDE]) and turn the [POWER] switch on. The sewing machine starts in test mode and the screen shown below appears.
2. Select [MAIN BOARD TEST MODE] to open the main board's test mode selection screen, or select [PANEL BOARD TEST MODE] to open the panel board's test mode selection screen.

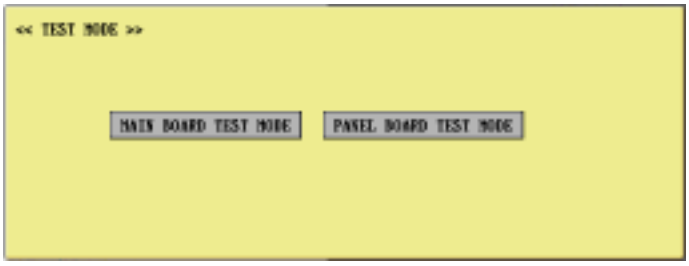

3. When [MAIN BOARD TEST MODE] is selected on the above screen, the screen shown below appears.

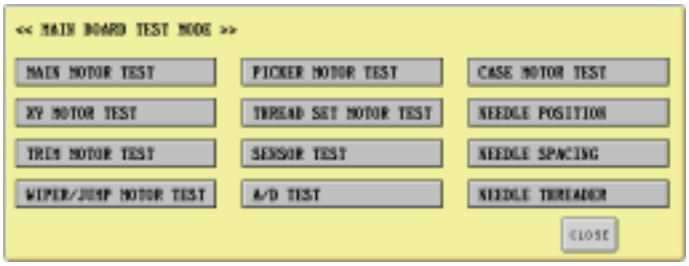

[MAIN MOTOR TEST]	: Opens the main shaft motor test mode screen.
[XY MOTOR TEST]	: Opens the X/Y carriage motor test mode screen.
[TRIM MOTOR TEST]	: Opens the trim (thread cut) motor test mode screen.
[WIPER/JUMP MOTOR TEST]	: Opens the wiper and jump bracket motor test mode screen.
[PICKER MOTOR TEST]	: Opens the picker motor test mode screen.
[THREAD SET MOTOR TEST]	: Opens the thread motor test mode screen.
[SENSOR TEST]	: Opens the sensor test mode screen.
[A/D TEST]	: Opens the A/D conversion value test mode screen.
[CASE MOTOR TEST]	: Opens the needle bar case motor test mode screen.
[NEEDLE POSITION]	: Opens the needle position adjustment screen.
[NEEDLE SPACING]	: Opens the needle and rotary hook timing adjustment and needle space adjustment screen.
[NEEDLE THREADER]	: Opens the needle threader adjustment screen.
[CLOSE]	: Closes the <MAIN BOARD TEST MODE> screen.

www.promelectroavtomat.ru

4. [MAIN MOTOR TEST]

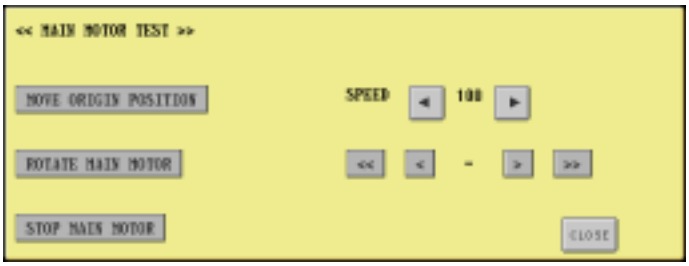

[MOVE ORIGIN POSITION]	: Adjusts the angle of the main shaft to the needle top stop position.
[ROTATE MAIN MOTOR]	: Rotates the main shaft at the preset speed.
[STOP MAIN MOTOR]	: Stops the main shaft.
[<] [>]	: Sets the motor speed.
[<<] [<] - [>] [>>]	: Changes the main shaft warm-up time. (Continuous [-] to 100 min)
[CLOSE]	: Closes the <MAIN MOTOR TEST> screen.

5. [XY MOTOR TEST]

The X waveform table and Y waveform table numbers are displayed to the right of [SELECT x] and [SELECT Y], depending on the settings for [SPEED] and [PITCH].

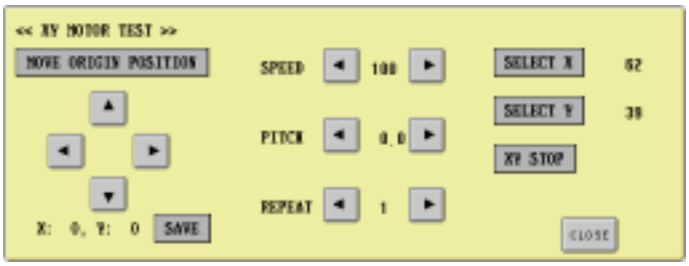

[MOVE ORIGIN POSITION]	: Returns the X and Y carriages to their origins.
[↑][←][→][↓]	: Changes the X and Y carriage origins. (-10 ~ 10)
[SAVE]	: Saves changes to the X and Y carriage origins in the EEPROM.
[<][>] (SPEED)	: Sets the motor speed. (100 ~ 1200)
[<][>] (PITCH)	: Sets the pitch. (0.0 ~ 20.0)
[<][>] (REPEAT)	: Sets the number of repeats. (1 ~ 10)
[SELECT X]	: Moves the X carriage at the preset speed, pitch, and repeat. The carriage stops if this button is pressed during movement.
[SELECT Y]	: Moves the Y carriage at the preset speed, pitch, and repeat. The carriage stops if this button is pressed during movement.
[XY STOP]	: Stops the X and Y carriage movement.
[CLOSE]	:Closes the <CY MOTOR TEST> screen.

www.promelectroavtomat.ru

6. [TRIM MOTOR TEST]

[MOVE ORIGIN POSITION] : Returns the trim (thread cut) motor to its origin.
[MOVE TRIM MOTOR] : Moves the trim (thread cut) motor.
[TRIM ON OFF] : Turns the trim (thread cut) motor on and off.
[TRIM MANUAL] : Cuts the thread.
[CLOSE] : Closes the <TRIM MOTOR TEST> screen.

7. [WIPER/JUMP MOTOR TEST]

[MOVE ORIGIN POSITION] : Returns the wiper and jump bracket motor to their origins.
[MOVE WIPER] : Moves the wiper.
[WIPER ON OFF] : Turns the wiper on and off.
[MOVE JUMP] : Moves the jump bracket.
[JUMP ON OFF] : Turns the jump bracket on and off.
[CLOSE] :Closes the <WIPER/JUMP MOTOR TEST> screen.

8. [PICKER MOTOR TEST]

[MOVE PICKER] : Moves the picker motor.
[PICKER ON OFF] : Turns the picker on and off.
[<][>] : Sets the picker drive over-pulses. (Determines the position the picker turns on.)
[CLOSE] : Closes the <PICKER MOTOR TEST> screen.

www.promelectroavtomat.ru

9. [THREAD SET MOTOR TEST]

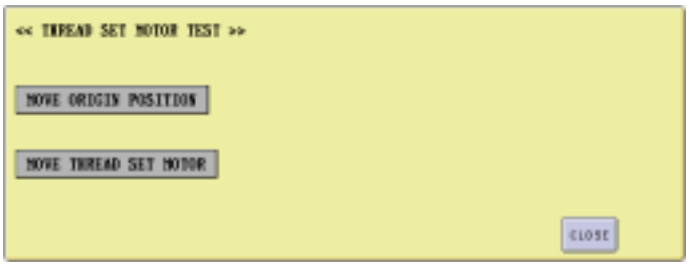

[MOVE ORIGIN POSITION] : Returns the thread motor to its origin.
[MOVE THREAD SET MOTOR] : Performs needle threading.
[CLOSE] : Closes the <THREAD SET MOTOR TEST> screen.

10. [SENSOR TEST]

The status of each sensor (including ENCODER A, ENCODER B, and TEST SW) is indicated using "H" or "L". A buzzer goes off when the sensor status changes (excluding ENCODER A and ENCODER B).
Although the current angle of the main shaft is displayed at the last line, '?' is displayed until the status of the NEEDLE UP sensor changes after power has been turned on.

[INITIALIZE] : Moves the angle of the main shaft to the initial adjustment position (approx. 350 deg.).
[CLOSE] : Closes the <SENSOR TEST> screen.

11. [A/D TEST]

24V power supply voltage, 40V power supply voltage, frame sensor A/D value, and calculated results are displayed. The main PCB mask program version and the check sum are also displayed.

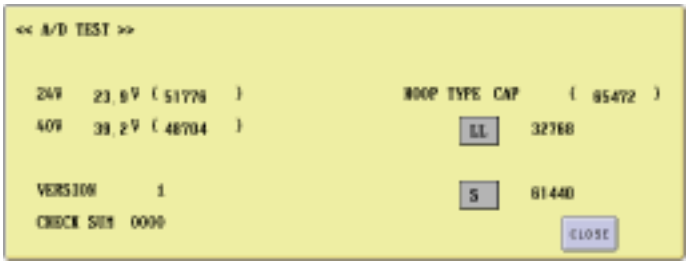

[LL] : Saves the A/D value of the frame sensor at the LL frame attachment position.
[S] : Saves the A/D value of the frame sensor at the S frame attachment position
[CLOSE] : Closes the <A/D TEST> screen.

www.promelectroavtomat.ru

12. [CASE MOTOR TEST]

In addition to conduct the needle bar case motor test, the status of the thread breakage sensor is indicated using "H" or "L". (A buzzer goes off when the status of the thread breakage sensor changes.)
Needle bar data that has already been read via USB is displayed below [THREAD BREAKAGE]. (13 characters)

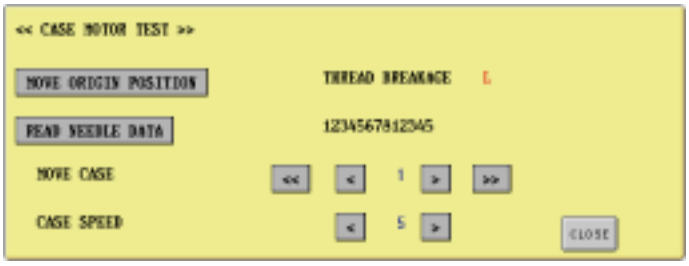

[MOVE ORIGIN POSITION] : Returns the needle bar case to its origin.
[READ NEEDLE DATA] : Reads the needle bar data via USB and registers it to the sewing machine.
[<<] [<] ? [>] [>>] : Selects the needle bar. The needle bar number is displayed at "?".
[<] ? [>] : Changes the needle bar speed. The speed (1 (lowest) to 9 (highest)) is displayed at "?".
[CLOSE] : Closes the <CASE MOTOR TEST> screen.

13. [NEEDLE POSITION]

When the needle bar data has been read via USB, needle bar numbers for front/back adjustment and left/right adjustment are displayed, and the read needle bar data is displayed to the right of these. (13 characters)

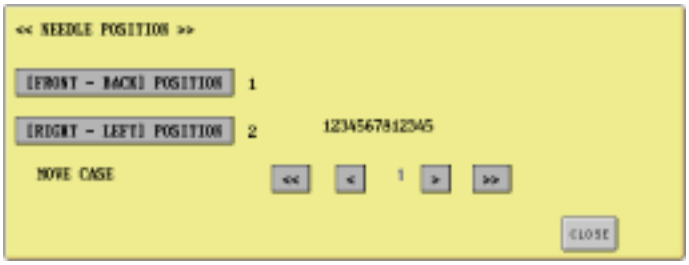

[[FRONT - BACK] POSITION] : Moves the needle bar to the position for front/back adjustment.
[[RIGHT - LEFT] POSITION] : Moves the needle bar to the position for right/left adjustment.
[<<] [<] ? [>] [>>] : Selects the needle bar. The needle bar number is displayed at "?".
[CLOSE] : Closes the <NEEDLE POSITION> screen.

14. [NEEDLE SPACING]

When the needle bar data has been read via USB, needle bar numbers for needle and rotary hook timing adjustment and needle space adjustment are displayed, and the read needle bar data is displayed to the right of these. (13 characters)

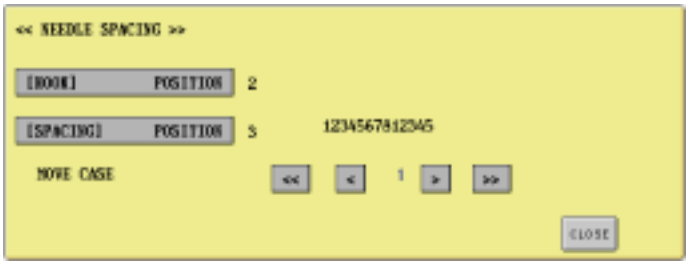

[[HOOK] POSITION] : Moves the needle bar to the position for needle and rotary hook timing adjustment.
[[SPACING] POSITION] : Moves the needle bar to the position for needle space adjustment.
[<<] [<] ? [>] [>>] : Selects the needle bar. The needle bar number is displayed at "?".
[CLOSE] : Closes the <NEEDLE SPACING> screen.

www.promelectroavtomat.ru

15. [NEEDLE THREADER]

When the needle bar data has been read via USB, the needle bar numbers for front/back adjustment and left/right adjustment are displayed, and the read needle bar data is displayed to the right of these. (13 characters)

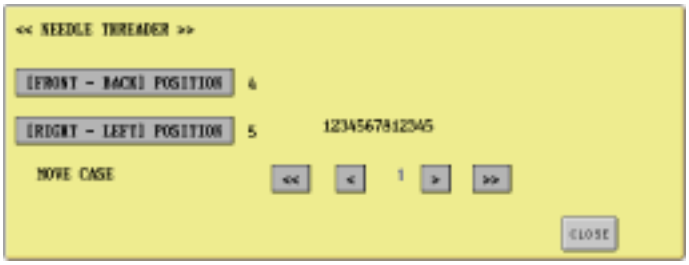

[[FRONT - BACK] POSITION] : Moves the needle bar to the position for front/back adjustment.
[[RIGHT - LEFT] POSITION] : Moves the needle bar to the position for right/left adjustment.
[<<] [<] ? [>] [>>] : Selects the needle bar. The needle bar number is displayed at "?".
[CLOSE] : Closes the <NEEDLE POSITION> screen.

www.promelectroavtomat.ru

Starting test mode

Hold down the [START/STOP], [THREAD CUT], and [THREAD GUIDE] buttons and turn the [POWER] switch on.

The screen shown below appears. Select [PANEL BOARD TEST MODE].

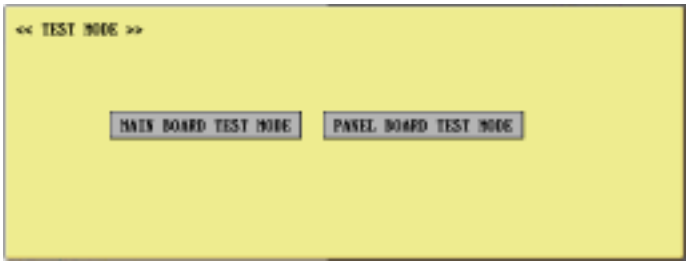

When [PANEL BOARD TEST MODE] is selected, the menus shown below are displayed.

Menu descriptions

1. Switch test
   Select this mode to check whether the three push buttons are operating correctly.

The button on the screen turns red while the actual button is held down.

2. LED test
   Select this mode to check whether the LED lights correctly.

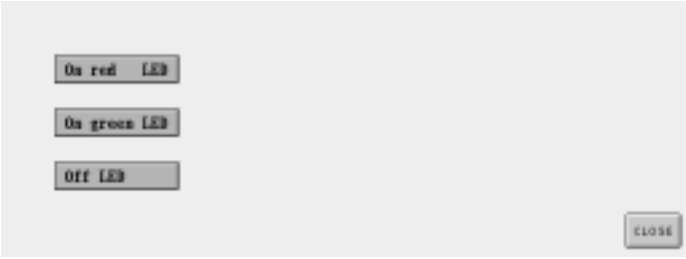

Pressing [On red LED] lights the LED red. (The LED remains lit until [Off LED] is pressed.)
Pressing [On green LED] lights the LED green. (The LED remains lit until [Off LED] is pressed.)
Pressing [Off LED] turns the LED off.

www.promelectroavtomat.ru

3. LCD brightness
   Select this mode to adjust the LCD's brightness.
   Press the [+] and [-] buttons to adjust the brightness.

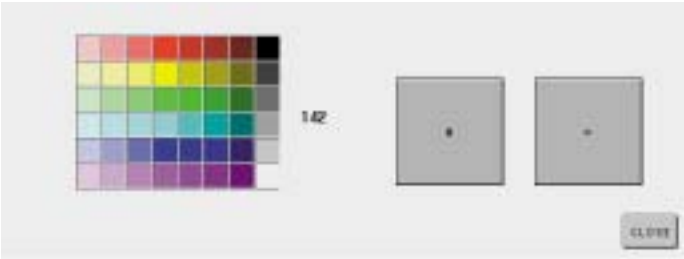

   The value is saved each time the button is pressed.
   This mode can also be started by pressing the [POWER] switch with one hand while touching the screen with your other hand.
   An explanation on LCD brightness is also available on the 5th page of Setting Menu.

4. Emb Card
   Select this mode to check whether the embroidery card slot is operating correctly.
   Insert an embroidery card in the slot, and select this mode.
   When the card is recognized correctly, [Copyright by Brother Industries Ltd.] is displayed.
   If the card is not recognized correctly, [No Embroidery Card.] is displayed.

5. CF CARD LIST
   Select this mode to check whether the Compact Flash slot is operating correctly and display a list of the files in the Compact Flash.

6. FDD FILE LIST
   Select this mode to check that the floppy disk drive is operating correctly and display a list of the files in the floppy disk.

7. USB FILE LIST
   Select this mode to check whether the USB RAM disk operates correctly and display a list of the files in the floppy disk.
   When there are no files in the RAM disk although it is accessed correctly, [No files] is displayed.
   If accessing the RAM disk fails, [USB RAM Disk Error] is displayed.
   When files have already been transferred from the personal computer to the PR-600 via the USB cable before pressing this mode button, a list of the file names is displayed.

8. Touch Panel adj
   Select this mode to adjust the touch panel.
   This mode can also be started as follows:
   1) Press the [POWER] switch with one hand while touching the screen with your other hand.
   2) Press the [THREAD CUT] button on the <Brightness Adjustment> screen.
   Touch the center of the [+] symbols with a stylus pen in the following order: top left corner, bottom left corner, bottom right corner, top right corner, and center.
   When the touch panel is adjusted correctly, a black square appears in the top left corner of the screen. If adjustment fails, a red square appears.

9. PANEL EEPROM
   Select this mode to display the contents of the panel's EEPROM. The contents cannot be changed.

10. Machine EEPROM
    Select this mode to display the contents of the sewing machine's EEPROM.

11. FDD format
    Select this mode to format the floppy disk.
    A warning message dialog with an [OK] button is displayed on the screen. Pressing [OK] starts formatting. All data stored in the disk is lost during formatting.

12. CF Card Format
    Select this mode to format the Compact Flash card.
    A warning message dialog with an [OK] button is displayed on the screen. Pressing [OK] starts formatting. All data stored in the card is lost during formatting.

www.promelectroavtomat.ru

1. Default Setting

Select this mode to initialize the panel settings.

Items to be initialized are listed below.
[Editing information]

Parameters	Default
Thread spool	All color information set for spools is cleared, resulting in no spool set.
Reserved thread	All spools are released.
Sewing area display	LL frame area is displayed.
Grid display	Only the center is displayed
Cursor display	A small cross cursor is displayed.
Sewing order display	Name of Color
Display expanded thread color	OFF
Thread selection	Brother's original pallet
DST thread trimming feed	+3 when thread trimming is turned on
Deleting short stitches	0.3 mm or less
Remaining length of thread	Standard
Units of measurements	mm
Custom thread table 1, 2	All registered custom settings are reset.
Starting / Ending position	Center (both start and end of sewing)
Lock stitch	ON
Maximum speed	Tubular frame: 600 rpm Cap frame: 400 rpm

[System setup data]

- Language (reset to the factory-set language.)
- Resumption (operation is not resumed even when suspension is released. Number of switches is returned to [0].)
- Buzzer: [Beep] is set.

[Empty pocket]
Empties the pocket data.

2. Clear trip

When this mode button is selected, the current values for the stitch counter and sewing time counter (Total and Trip) are displayed on the left side, and the [Clear trip] button is displayed on the right side of the screen.
Pressing the [Clear trip] button resets [Trip Stitches] and [Trip Time] to zero.

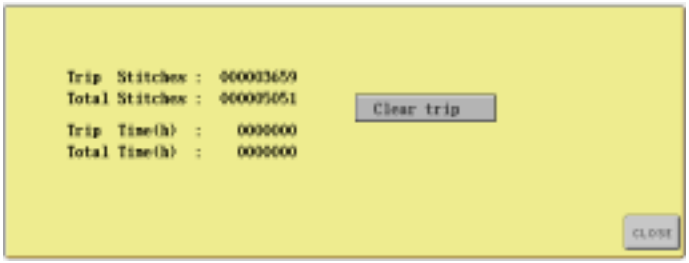

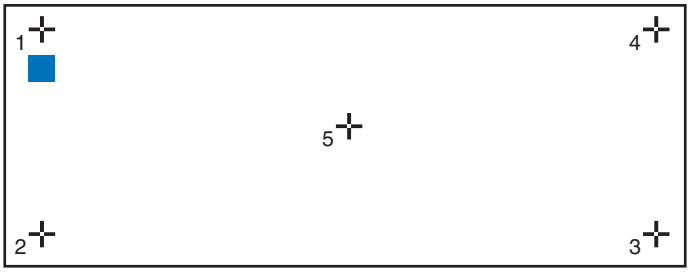

If a red square appears, repeat the operation from step 1.

www.promelectroavtomat.ru

When a main PCB is replaced, a needle bar number which is used for adjustment in test mode is displayed as "NO DATA" on screen.
In this case, see numbers printed on bar code which is stuck on needle bar case and select a needle bar number appropriate for an adjustment.

How to select a needle bar number: <e.g.>

1. Start up Test mode.
2. Select "MAIN BOARD TEST MODE".
3. Select "CASE MOTOR TEST".
4. Select a needle bar number used for an adjustment by pressing "<" or ">" key.

NEEDLE BAR DATA ON BAR CODE

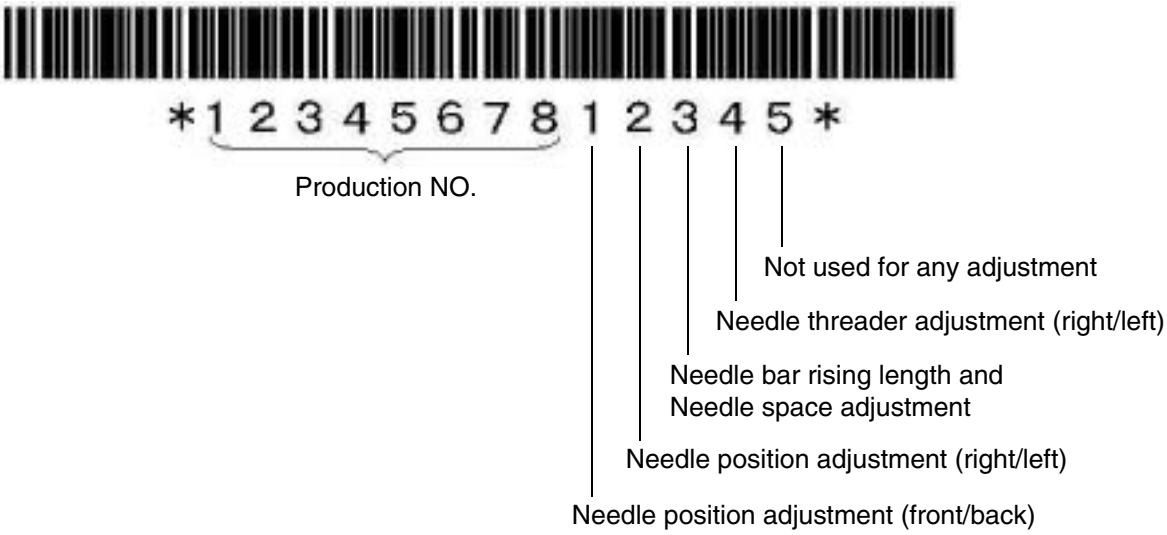

www.promelectroavtomat.ru

1. Loosen the 2 screws ❶.
2. Move the motor holder up and down to adjust the motor belt tension.

Motor belt deflection when a load of approx. 0.98 N (100 g) is applied to the center of the motor belt	1.5 - 3.5 mm

3. Tighten the 2 screws ❶.

❶	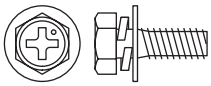	Upset 4X12DB Color; Gold	Torque 1.18 - 1.57 N-m

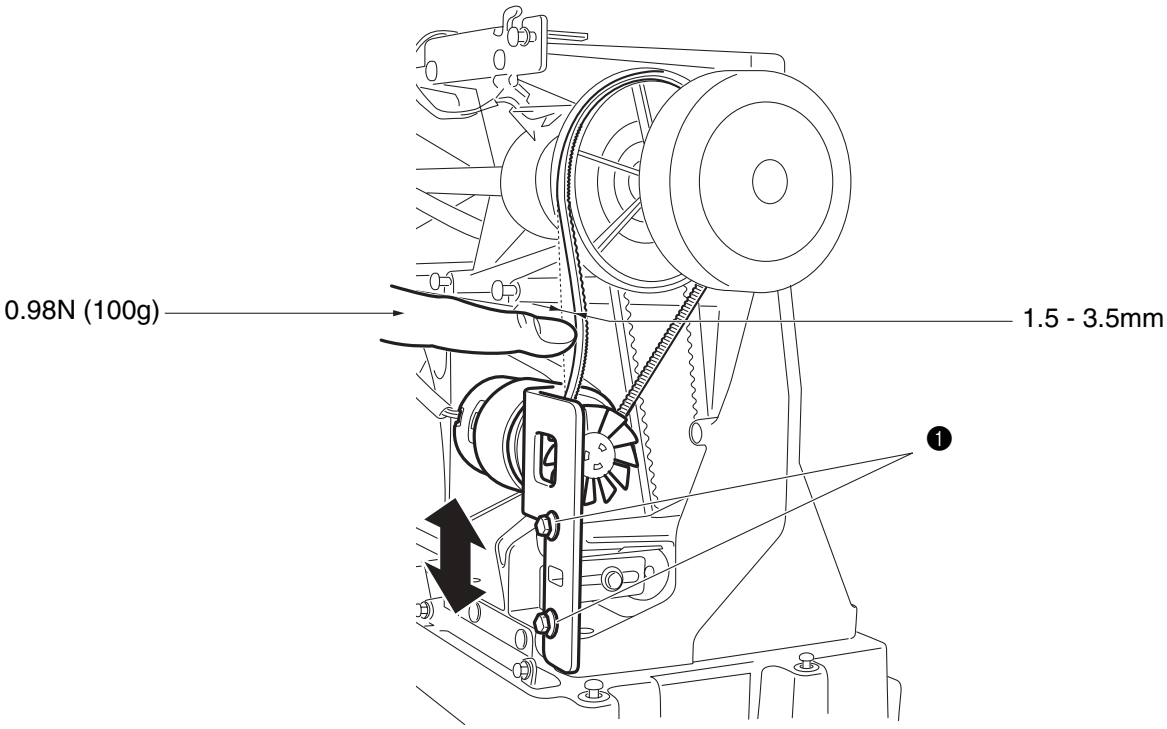

www.promelectroavtomat.ru

1. Loosen the screw ❶.
2. Move the tension pulley right and left to adjust the timing belt tension.

Timing belt deflection when a load of approx. 1.96 N (200 g) is applied to the center of the timing belt	3.0 - 4.0 mm

3. Tighten the screw ❶.

❶	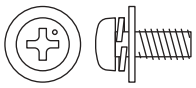	Screw, Pan (S/P washer) M4X10DB Color; Silver	Torque 1.18 - 1.57 N-m

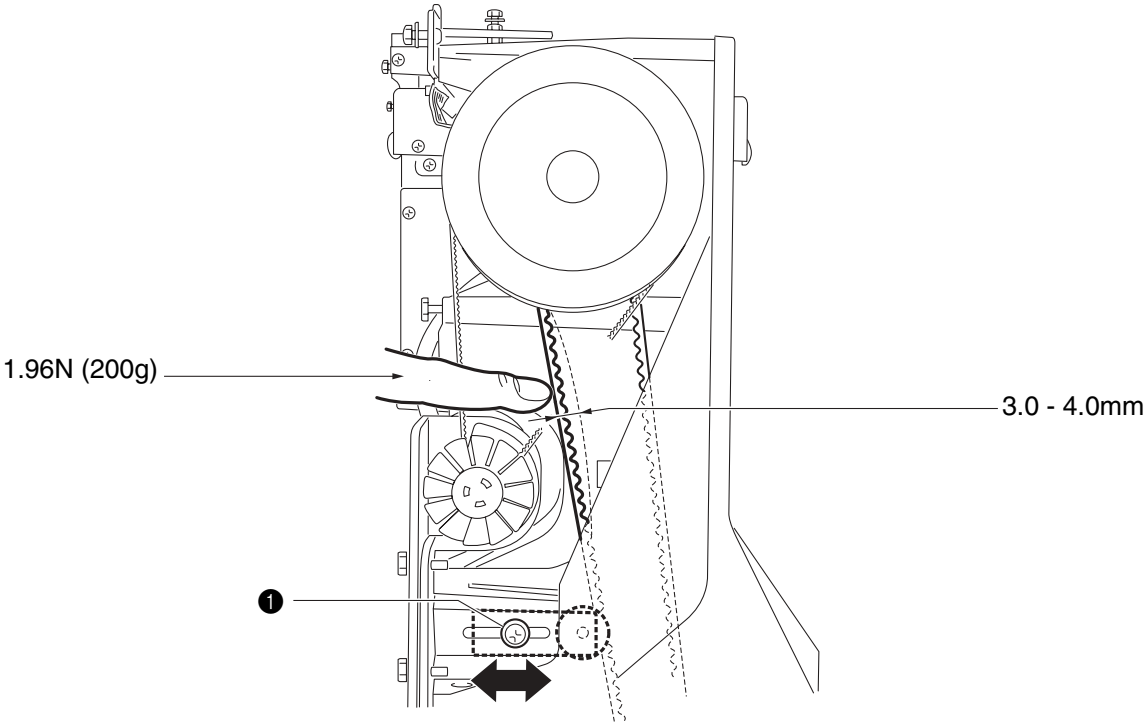

www.promelectroavtomat.ru

Front/back position adjustment

1. Enter the test mode, and press [MAIN BOARD TEST MODE] and then [NEEDLE POSITION].

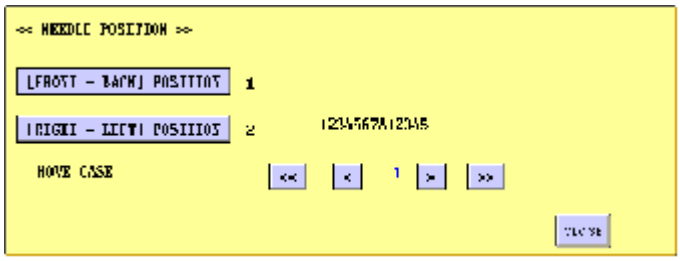

2. Press [[FRONT - BACK] POSITION]]. The reference needle bar is selected and the needle bar case final assembly moves.
3. Rotate the pulley manually to lower the needle bar until the needle tip enters the needle hole.
4. Loosen the screw ❶ at the lower section of the needle bar case final assembly.
5. Move the case positioning plate assembly back and forth to adjust the needle front/back position.
6. Tighten the screw ❶.
7. Check the position for the other 5 needle bars.

***Key point**
- Pressing [←] and [→] selects the other needle bars.

❶	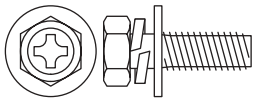	BOLT. (S/P WASHER) M5X16 Color; Silver	Torque 1.8 - 2.2 N-m

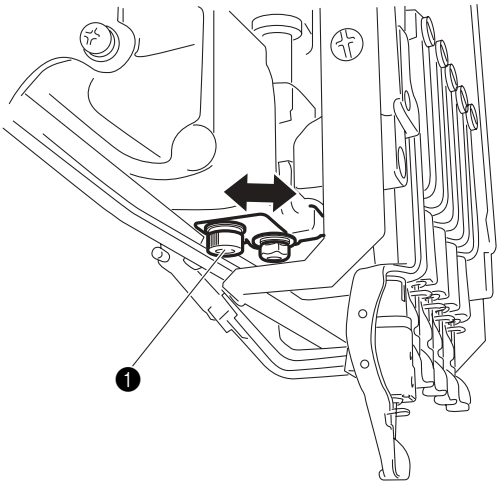

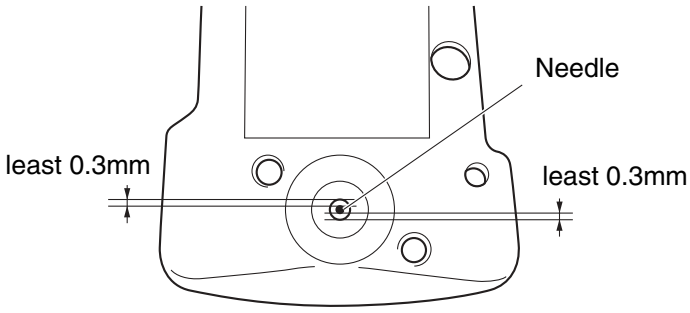

Clearance between the needle hole and the needle front/back position should be at least 0.3 mm.

www.promelectroavtomat.ru

Right/left position adjustment

1. Enter the test mode, and press [MAIN BOARD TEST MODE] and then [NEEDLE POSITION].

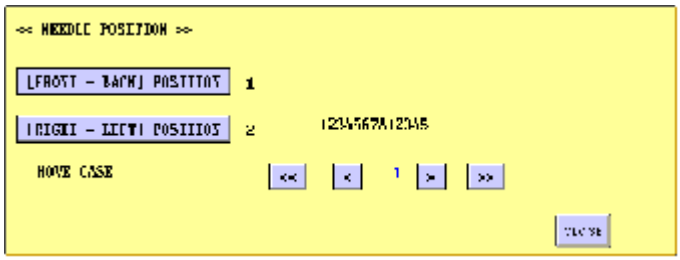

2. Press [[RIGHT - LEFT] POSITION]]. The reference needle bar is selected and the needle bar case final assembly moves.
3. Rotate the pulley manually to lower the needle bar until the needle tip enters the needle hole.
4. Loosen the 2 screws ❶.
5. Move the change box right and left to adjust the needle right/left position.
6. Tighten the 2 screws ❶.
7. Check the position for the other 5 needle bars.

***Key point**
- Pressing [←] and [→] selects the other needle bars.

❶	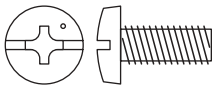	Screw, Bind M5X12 Color; Silver	Torque 2.9 - 3.2 N-m

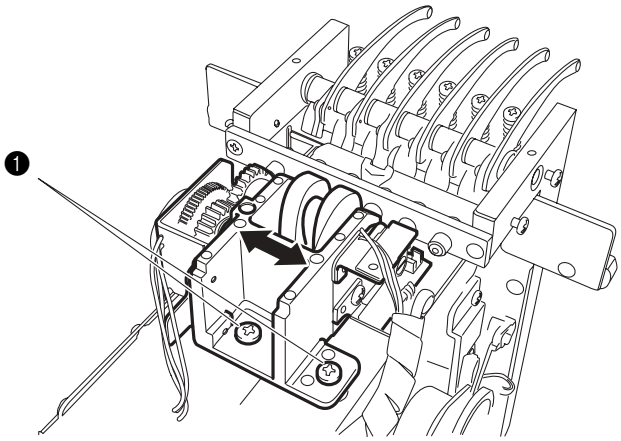

The change box should be parallel to the needle bar case final assembly.

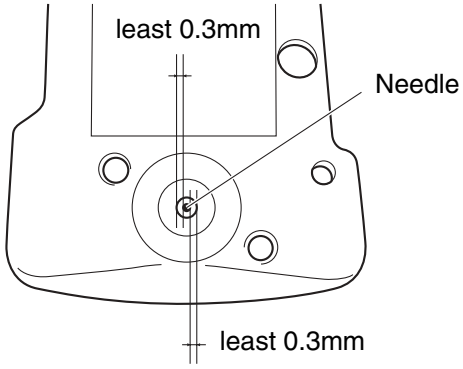

Clearance between the needle hole and the needle right /left position should be at least 0.3 mm.

www.promelectroavtomat.ru

1. Enter the test mode, and press [MAIN BOARD TEST MODE] and then [NEEDLE SPACING].

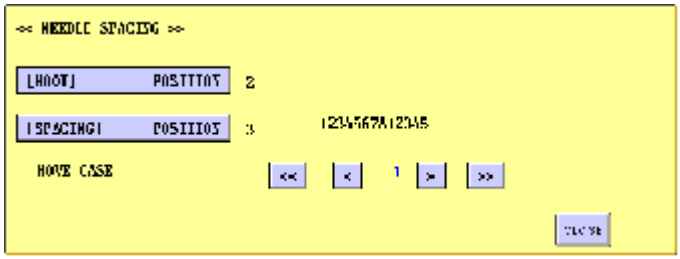

2. Press [[SPACING] POSITION]]. The reference needle bar for rising length adjustment is selected and the needle bar case final assembly moves.
3. Press [CLOSE] and then [SENSOR TEST], and rotate the pulley manually until the numerical value for [MAIN MOTOR ANGLE] is "199."

4. Loosen the 3 screws ❶, adjust the needle bar rising length and the needle space, and tighten the 3 screws ❶.
5. Check the needle bar rising length and the needle space for the other 5 needle bars.

***Key point**

- Pressing [←] and [→] selects the other needle bars.

❶		Foot set screw 4.46□ Color;	Torque 0.59 - 0.78 N-m

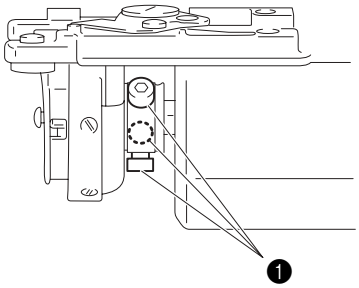

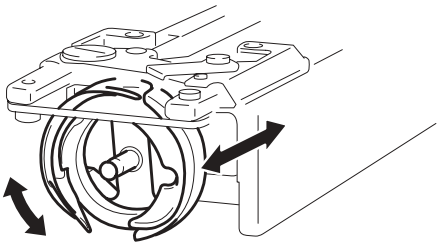

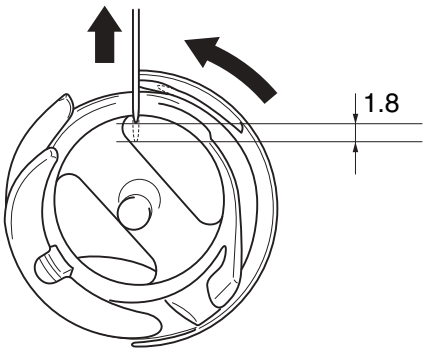

The right end of the needle matches the rotating hook's tip when the value of [MAIN MOTOR ANGLE] is 199 (approx. 2 mm).
(Technical standard: The right end of the needle must match the rotating hook's tip when the needle bar is raised 1.8 - 2.2 mm from the bottom point.)

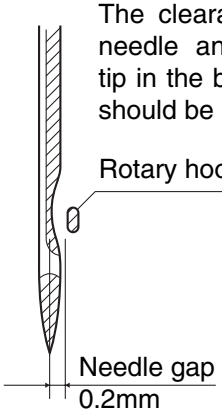

The clearance between the needle and rotating hook's tip in the back/forth direction should be 0.2 mm or less.

www.promelectroavtomat.ru

1. Rotate the pulley manually to move the needle bar until the needle's right edge matches the rotating hook's tip.
2. Loosen the screw ❶.
3. Adjust the needle bar height and alignment.
4. Tighten the screw ❶.
5. Repeat the same steps to adjust the needle bar height for the other 5 needle bars.

***Key point**
- Pressing [←] and [→] selects the other needle bars.

Clearance between top edge of rotating hook's tip and top edge of needle hole	1.8 - 2.2 mm
Alignment of needle bar and needle guard relative to upper shaft	Tilt to the right (when viewed from the front) 0 to 2°.

❶		Set Screw, Socket (CP) SM4.37-40X4 Color; Black	Torque 0.78 - 1.18 N-m

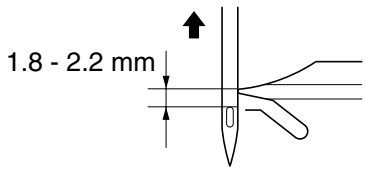

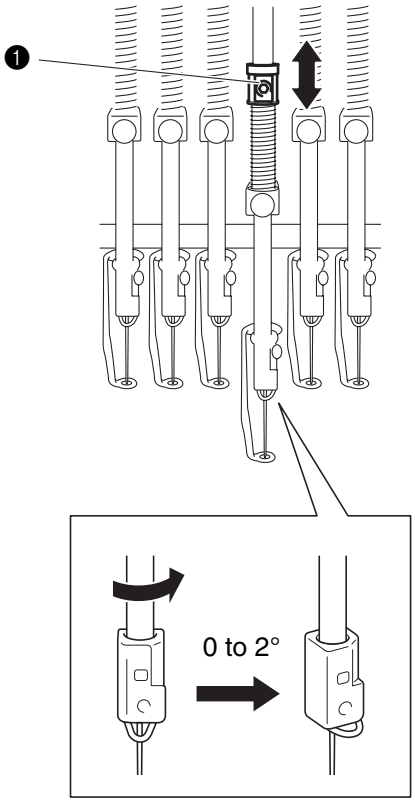

The clearance between the top edge of rotating hook's tip and top edge of needle hole should be 1.8 - 2.2 mm.
Face the needle hole to the front.

www.promelectroavtomat.ru

1. Loosen the screw ❶ and ❷.
2. Adjust the clearance between the rotary hook stopper and the rotary hook.
3. Tighten the screws ❶ and ❷.

Clearance between rotary hook stopper end face and rotary hook	0.65 - 0.95 mm

❶		Bolt, Socket M3X6 Color; Black	Torque 0.59 - 0.78 N-m
❷		Screw, P/F Color;	Torque 0.59 - 0.78 N-m

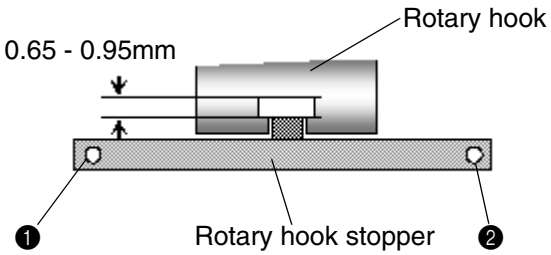

www.promelectroavtomat.ru

1. Rotate the pulley manually to move the needle bar to the bottom point.
2. Loosen the screw ❶.
3. Adjust the presser hoot height.
4. Tighten the screw ❶.
5. Repeat the same steps to adjust the presser hoot height for the other 5 needle bars.

***Key point**
- Pressing [←] and [→] selects the other needle bars.

Clearance between section surrounding eye of needle and bottom face of presser foot	0.5 - 1.1 mm

❶	Screw Color;	Torque 0.78 - 1.18 N-m

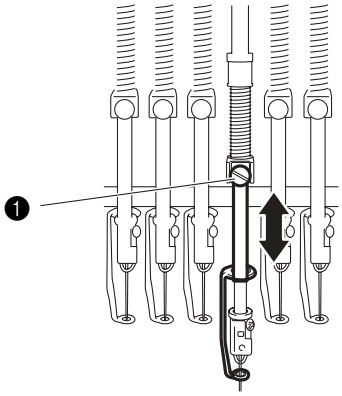

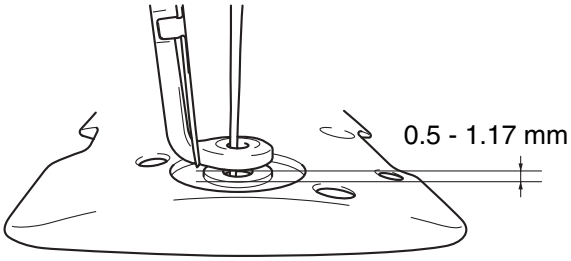

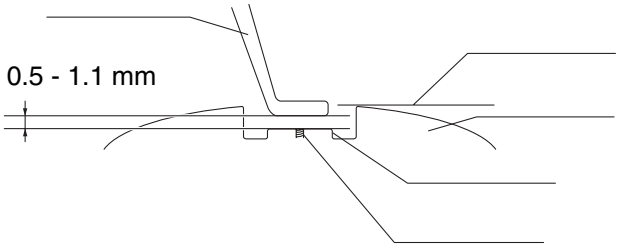

The clearance between the section surrounding the eye of the needle and the bottom face of the presser foot should be 0.5 - 1.1 mm.
(The bottom face of presser foot is slightly lower than the top face of the needle plate.)

Needle plate
Top face of needle plate
Presser foot
Section surrounding eye of needle
Eye of needle

www.promelectroavtomat.ru

1. Enter the test mode, and press [MAIN BOARD TEST MODE] and then [NEEDLE THREADER].

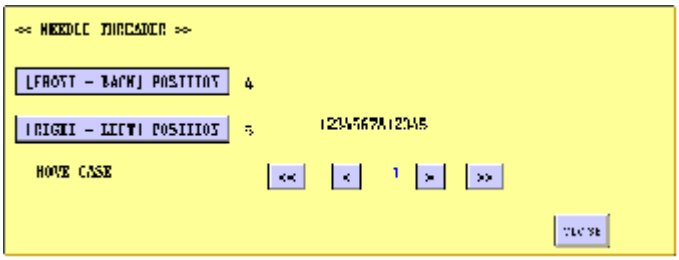

2. Press [[RIGHT - LEFT] POSITION]]. The reference needle bar for needle threader right/left position adjustment is selected and the needle bar case final assembly moves.
3. Rotate the pulley manually to move the needle bar to the top point.

   ***Key point**
   - In order to connect the needle bar clamp and the J vertical set assembly correctly, rotate the pulley 360 degrees counterclockwise, and then move the needle bar to the adjustment position.
4. Loosen the screw ❶.
5. Push the top dead center plate towards the needle bar (downward) so that the cushion rubber is compressed slightly (approx. 0.3 mm), and tighten the screw ❶.
6. Adjust the needle thread unit to the height of the selected needle bar.
7. For the top dead center plate of the other 5 needle bars, secure the plate at the position the upper surface of the needle thread hook is aligned with the top end of the needle hole (position the needle thread hook enters the needle hole)..

❶		Screw, Bind M4X6 Color; Silver	Torque 1.18 - 1.57 N-m

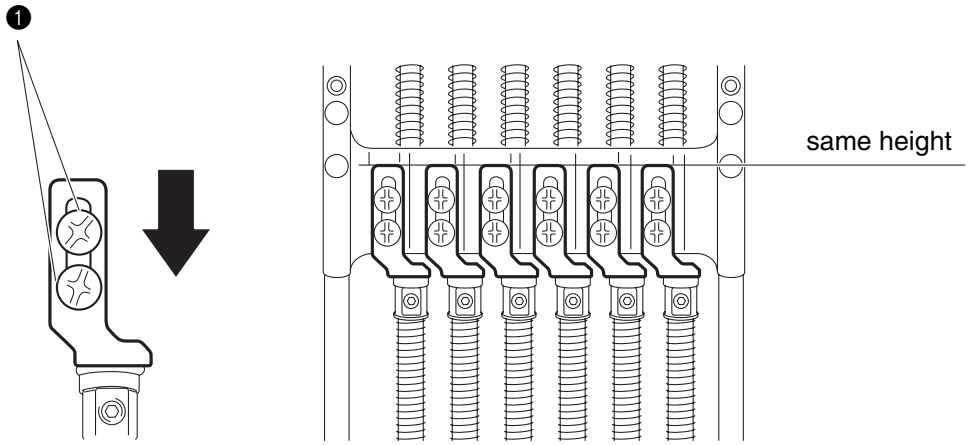

www.promelectroavtomat.ru

Up/down position adjustment

1. Enter the test mode, and press [MAIN BOARD TEST MODE] and then [NEEDLE THREADER].

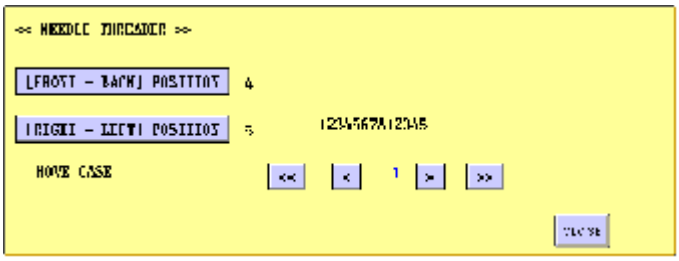

2. Press [←] or [→] to select the number 1 needle bar, and the needle bar case final assembly moves.
3. Manually lower the needle thread assembly's rack to the bottom, and check the height of the hook's top face and the height of the needle hole's top edge. Raise the rack to its original position.
4. Repeat the same steps to check the height for the other needle bars (numbers 2 to 6).

   ***Key point**
   - Pressing [←] and [→] selects the other needle bars.

5. Loosen the 2 screws ❶.
6. Adjust the up/down position of the base plate assembly (hook) to the highest needle bar position checked through steps 2 to 4 above.
7. Tighten the 2 screws ❶.

❶		Screw, Pan (S/P washer) M4X8DB Color; Silver	Torque 1.18 - 1.57 N-m

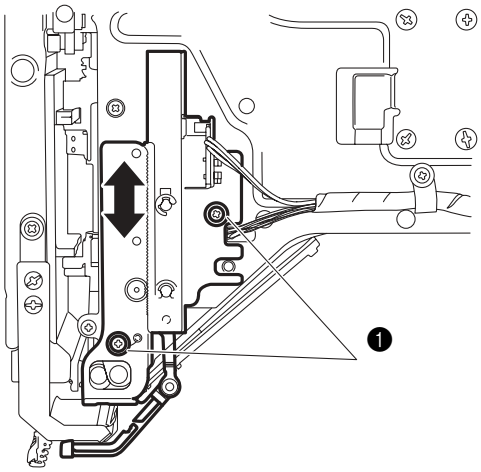

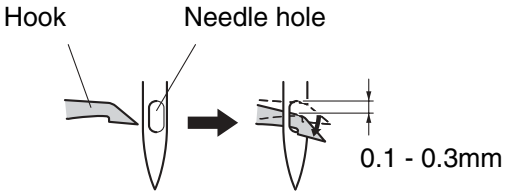

The hook is 0.1 to 0.3 mm lower than the top end of the needle hole when the hook is threaded through the needle hole.

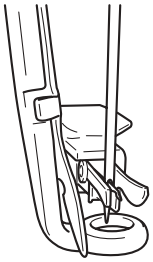

Inspection and Adjustment

www.promelectroavtomat.ru

Right/left position adjustment

1. Enter the test mode, and press [MAIN BOARD TEST MODE] and then [NEEDLE THREADER].

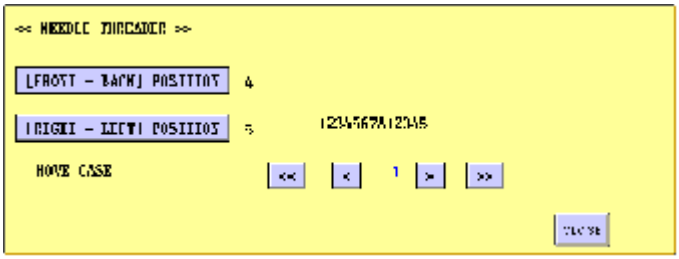

2. Press [RIGHT - LEFT] POSITION]. The reference needle bar for needle threader right/left position adjustment is selected and the needle bar case final assembly moves.
3. Loosen the 2 screws ❶.
4. Manually lower the needle thread assembly's rack to the bottom, and move the hook to the position immediately before the needle hole.
5. Manually hold the bush, and rotate the hook holder assembly using a screwdriver to adjust the right and left positions of the hook assembly.
6. Tighten the screw ❶.
7. Check that the hook passes through the needle hole for the other 5 needle bars.

***Key point**

- Pressing [←] and [→] selects the other needle bars.

❶		Set Screw, Socket (CP) M3X3 Color; Black	Torque 0.59 - 0.78 N-m

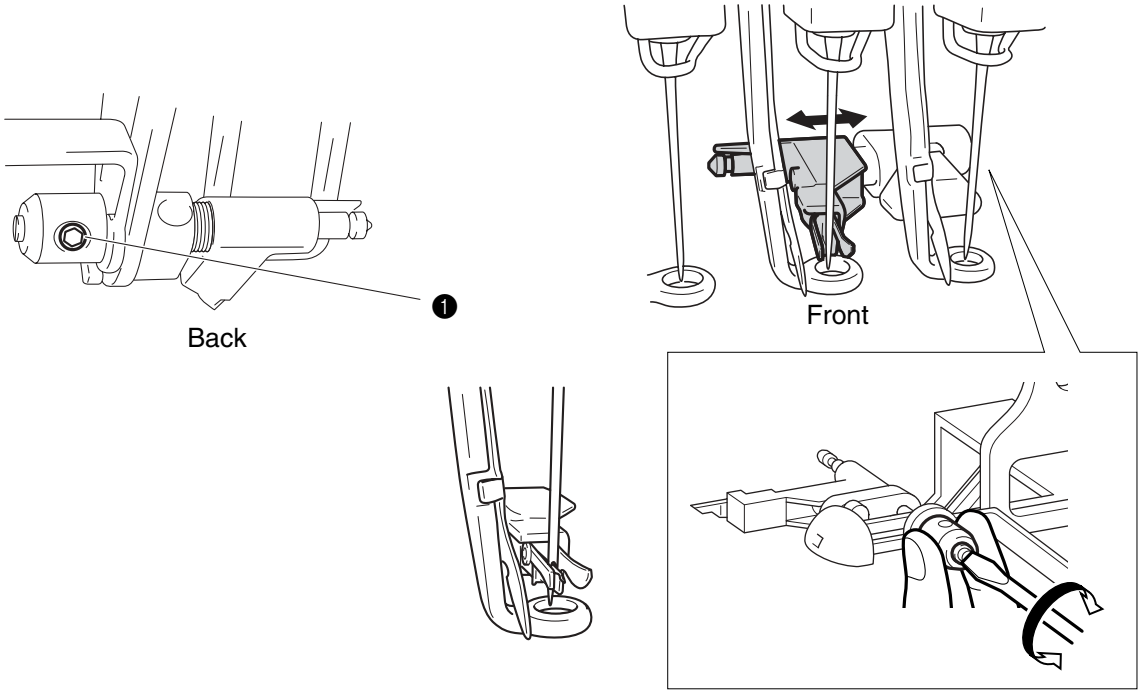

www.promelectroavtomat.ru

Check	Needle threading check

1. Enter the test mode, and press [MAIN BOARD TEST MODE] and then [THREAD SET MOTOR TEST].

2. Press [MOVE ORIGIN POSITION] to move the hook to its origin.
3. Press [MOVE THREAD SET MOTOR] to check that the hook passes through the needle hole.
4. Check that the hook passes through the needle hole for the other 5 needle bars.

***Key point**

- Press [CLOSE], [MAIN BOARD TEST MODE], and then [NEEDLE THREADER], and then pressing [←] or [→] selects the other needle bars.

www.promelectroavtomat.ru

1. Loosen the 2 screws ❶.
2. Loosen the 2 screws ❷.
3. Move the Y tension plate assembly back and forth to adjust the Y-belt tension.
4. Tighten the 2 screws ❷.
5. Repeat the same steps to adjust the Y-belt tension on the right side.
6. Tighten the 2 screws ❶.

Load when the center of the Y-belt is deflected 4.3 mm	2.4 - 2.6 N (2.44 - 2.65g)

❶	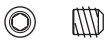	Set Screw, Socket (CP) M4X4 Color; Black	Torque 0.78 - 1.18 N-m
❷		Screw, Pan (S/P washer) M4X10DB Color; Silver	Torque 1.18 - 1.57 N-m

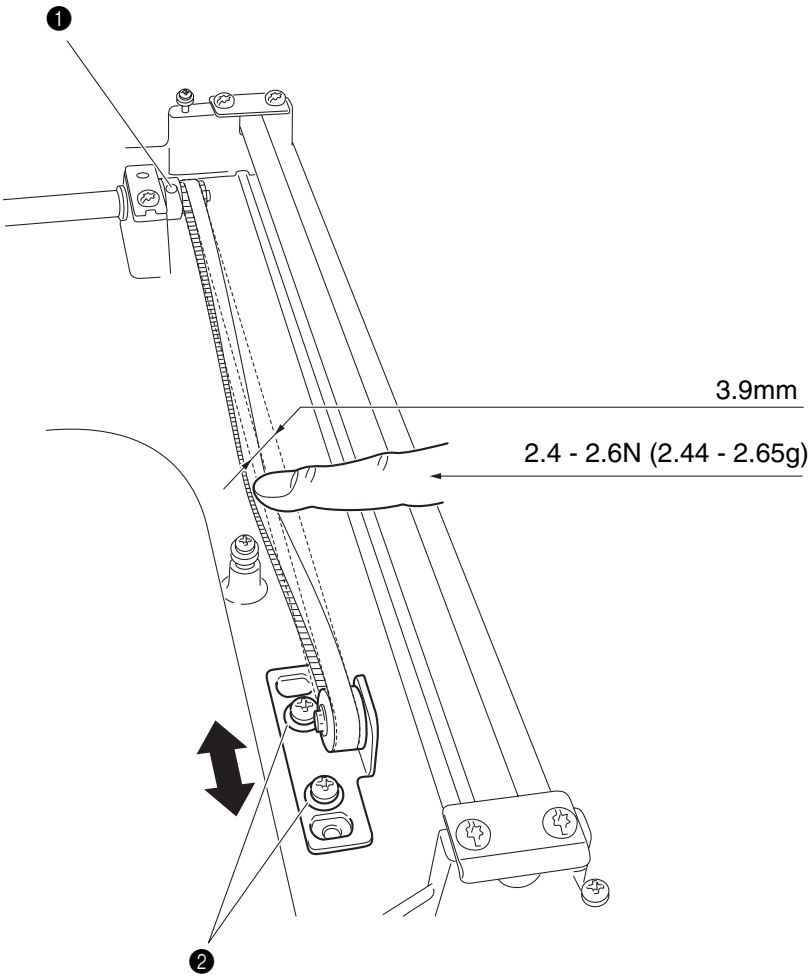

www.promelectroavtomat.ru

1. Loosen the 2 screws ❶.
2. Move the tension pulley plate assembly right and left to adjust the X-belt tension.
3. Tighten the 2 screws ❶.

Load when the center of the X-belt is deflected 6.1 mm	1.3 - 1.5 N (1.32 - 1.53g)

❶	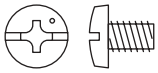	Screw, Bind M4X6 Color; Silver	Torque 1.18 - 1.57 N-m

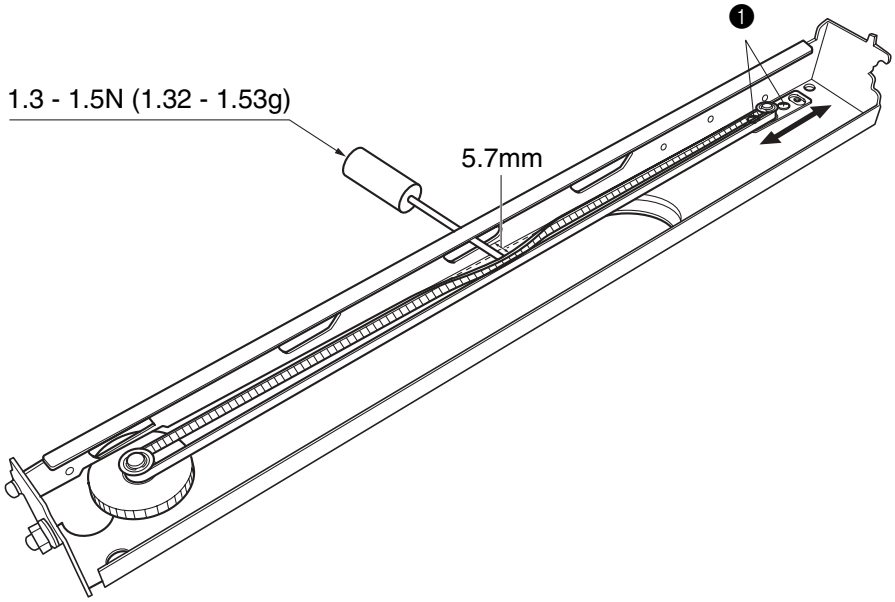

www.promelectroavtomat.ru

1. Remove the bobbin case.
2. Enter test mode and press [MAIN BOARD TEST MODE] and then [PICKER MOTOR TEST].

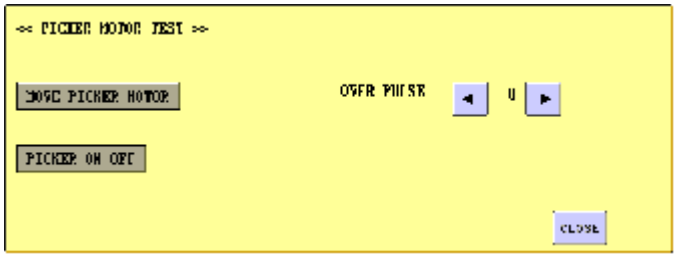

3. Press [←] or [→] to set "2" for [OVER PULSE].
4. Press [MOVE ORIGIN MOTOR] to turn the picker off, and then attach the bobbin case with a bobbin inserted to the rotary hook.
5. Press [MOVE ORIGIN MOTOR] to turn the picker on, and then check the clearance between the bobbin and the picker tip.
6. When clearance cannot be adjusted yet, move the picker holder attachment screw ❶ back and forth to tune the clearance. (Refer to the conditions below:)
   ① Set the value one rank higher (wider clearance) for [OVER PULSE]
   ② Adjust the clearance so that the picker's supporting point is on the operator's side.

Clearance between bobbin and picker tip	0.95 - 1.05 mm

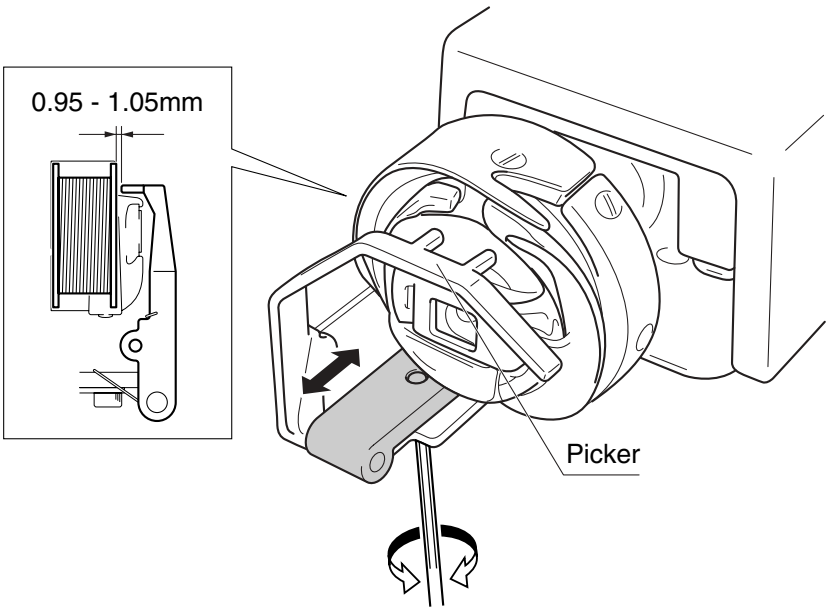

www.promelectroavtomat.ru

1. Enter the test mode, and press [MAIN BOARD TEST MODE] and then [TRIM MOTOR TEST].

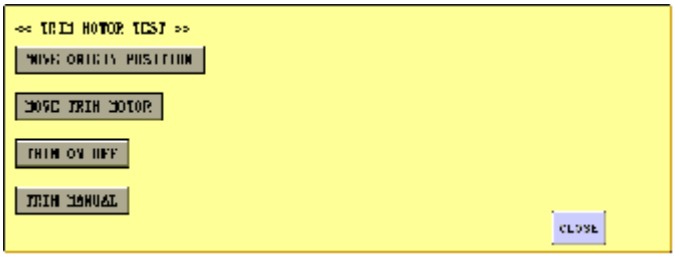

2. Press [MOVE ORIGIN POSITION] to move the needle plate base assembly's movable knife to its origin.
3. Loosen the 2 screws ❶.
4. Adjust the position the movable knife stops.
5. Tighten the 2 screws ❶.

Distance between edges of movable knife and fixed knife	0 mm

❶	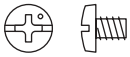	Screw, Bind M3X4 Color; Silver	Torque 0.78 - 1.18 N-m

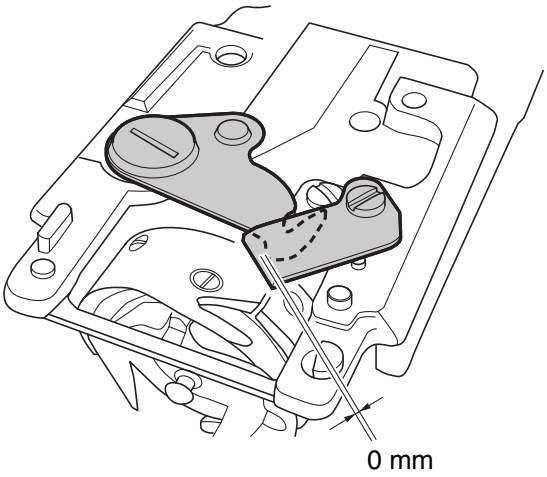

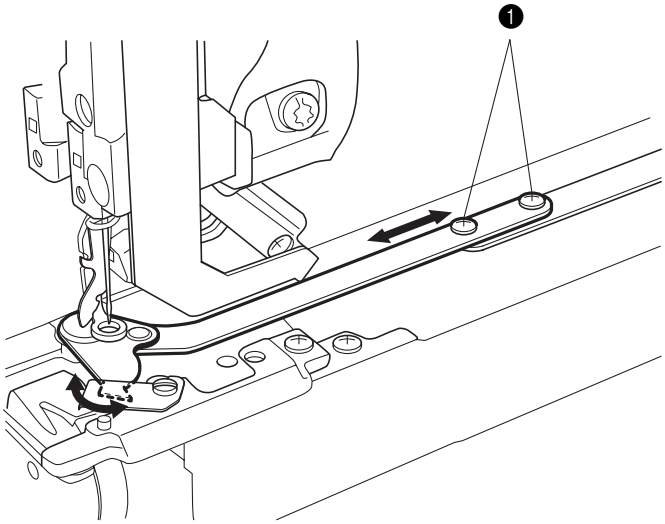

Inspection and Adjustment

www.promelectroavtomat.ru

1. Loosen the 4 screws ❶.
2. Adjust the vertical position of the thread presser base.
3. Tighten the 4 screws ❶.

Clearance between wiper hook top face and thread presser cover	0 - 0.2 mm

❶		Screw, Bind M4X6 Color; Silver	Torque 1.18 - 1.57 N-m

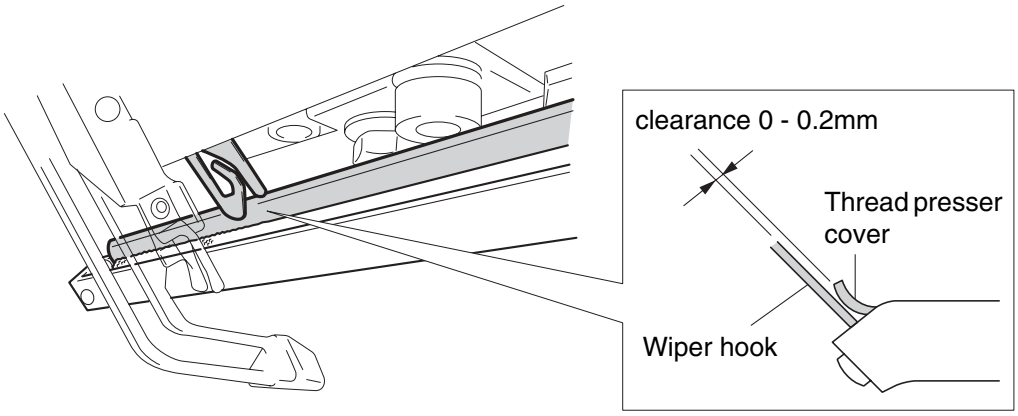

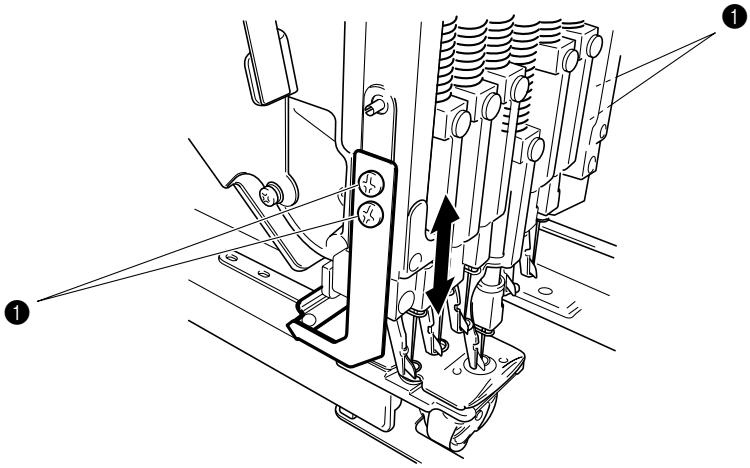

www.promelectroavtomat.ru

1. Attach the hoop stay assembly to the feed unit.
2. Enter the test mode, and press [MAIN BOARD TEST MODE] and then [A/D TEST].

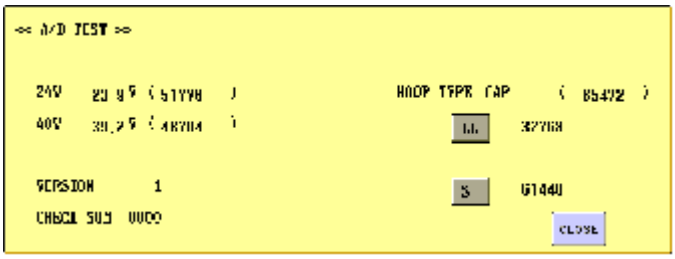

3. After the hoop stay assembly's LL-hoop has been attached, press [LL] to save the A/D value.
4. Replace the LL-hoop with the S-hoop, and then press [S] to save the A/D value.
5. After adjustment, move the tubular round arm L, and check that the hoop size matches the display on the test mode screen.

www.promelectroavtomat.ru

1. Attach the hoop stay assembly to the feed unit.
2. Attach the LL-hoop to the hoop stay assembly.
3. Attach the embroidery sheet to the LL-hoop.

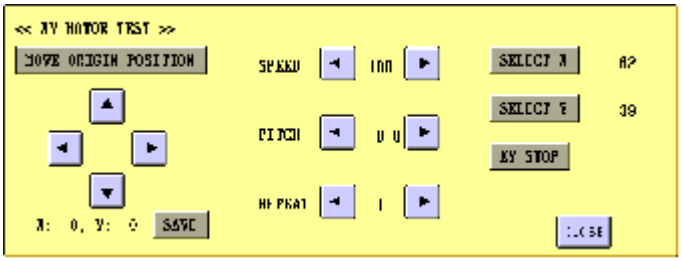

4. Enter the test mode, and press [MAIN BOARD TEST MODE] and then [XY MOTOR TEST].
5. Press [MOVE ORIGIN POSITION] to move the feed unit to its origin.
6. Use the [↑], [↓], [←] and [→] keys to adjust the position of the embroidery hoop so that the needle bar presser is aligned with the hole on the embroidery hoop.
7. Press [SAVE].

www.promelectroavtomat.ru

Check that the engagement load of the movable and fixed knives when the movable knife is pulled in the direction shown in Figure 1 is within the specifications.
If it is not within the specifications, adjust the load according to the steps below.

Adjustment steps

1. Measure the engagement load of the movable and fixed knives.
2. When the engagement load is not within the specifications, insert a U-spacer below the collar of the movable knife as shown in Figure 2.
3. Measure the engagement load of the movable and fixed knives.
4. Repeat steps 2 and 3 until the engagement load is within the specifications.

Engagement load of movable and fixed knives	4.9 N - 9.8 N (500 gf - 1000 gf)

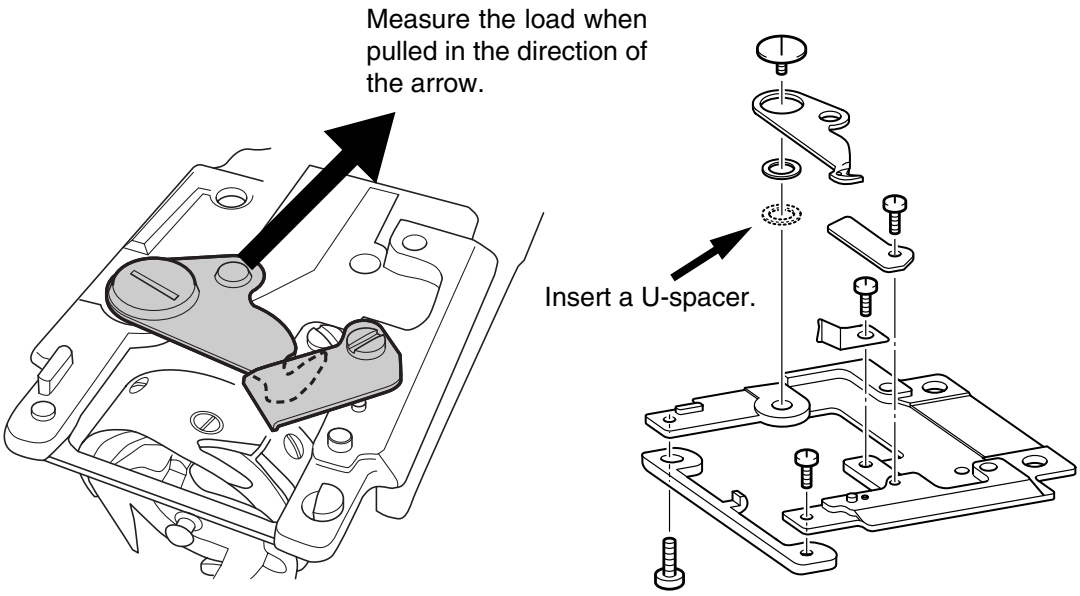

Fig.1

Fig.2

www.promelectroavtomat.ru

www.promelectroavtomat.ru

5 Failure Investigation for Electronic Parts

* Perform resistance measurements after turning off the power and detaching the connectors to be measured from the PCB.

Error message list.....5 - 2
The power is not turned on.....5 - 3
The touch panel does not work. .....5 - 6
The panel switch does not work. .....5 - 7
The needle bar does not move normally....5 - 8
Thread breakage detection does not function normally. .5 - 9
The hoop does not move normally. 5 - 10
The main shaft does not rotate normally..5 - 12
Thread is not cut normally. .....5 - 13
The wiper does not function normally...5 - 14
A needle is not threaded normally. .5 - 15
The picker does not function normally..5 - 16
The floppy disk cannot be used normally. 5 - 17
Card cannot be used normally.....5 - 18
Universal serial bus (USB) cannot be used normally. .5 - 19
The hoop sensor does not function normally. ..5 - 20
Error message .....5 - 23

www.promelectroavtomat.ru

Error message list	See page
Inappropriate needle stop position.	5 - 12
Needle bar case position error.	5 - 8
Needle case motor has been locked.	5 - 8
Needle bar case home position error.	5 - 8
Check if thread is broken.	5 - 9
Check if lower thread is broken.	5 - 9
X-axis home position error.	5 - 10
Y-axis home position error.	5 - 23
XY moving error.	5 - 12
EEPROM read/write error.	3 - 101
EEPROM read error.	3 - 5
Main motor rotate error.	5 - 12
Main motor lock.	5 - 12
Main motor encoder signal error.	5 - 24
Main motor encoder connect error.	5 - 24
Main motor current error.	5 - 25
Trimming sensor error.	5 - 13
Wiper error.	5 - 14
Sewing data error.	5 - 26
Needle threadder error.	5 - 15
Picker error.	5 - 16
Main motor speed error.	5 - 12
Power supply voltage error.(24V high)	5 - 27
Power supply voltage error.(24V low)	5 - 27
Power supply voltage error.(40V high)	5 - 27
Power supply voltage error.(40V low)	5 - 27
Panel communication error.	5 - 26
Comminication time out error.	5 - 26
Data receiving command error.	5 - 26
Comminication error.	5 - 26
No disk inserted or this disk may be defective.	5 - 17
Can not use this disk.	5 - 17
Floppy disk read error.	5 - 17
Save error.	5 - 17
Floppy disk erase error.	5 - 17
cannot format.	5 - 17
No CompactFlash card.	5 - 18

Error message list	See page
Can not use this card.	5 - 18
CompactFlash card read error.	5 - 18
Save error.	5 - 18
CompactFlash Card erase error.	5 - 18
cannot format.	5 - 18
USB read error.	5 - 19
Pocket read error.	3 - 5
Save error.	3 - 5
Delete error.	3 - 5
Embroidery card read error.	5 - 18
There is no memory card in card slot. Insert a memory card.	5 - 18
This card cannot be used.	5 - 18
Frame area over.	5 - 20
Change it to the big frame	5 - 20

www.promelectroavtomat.ru

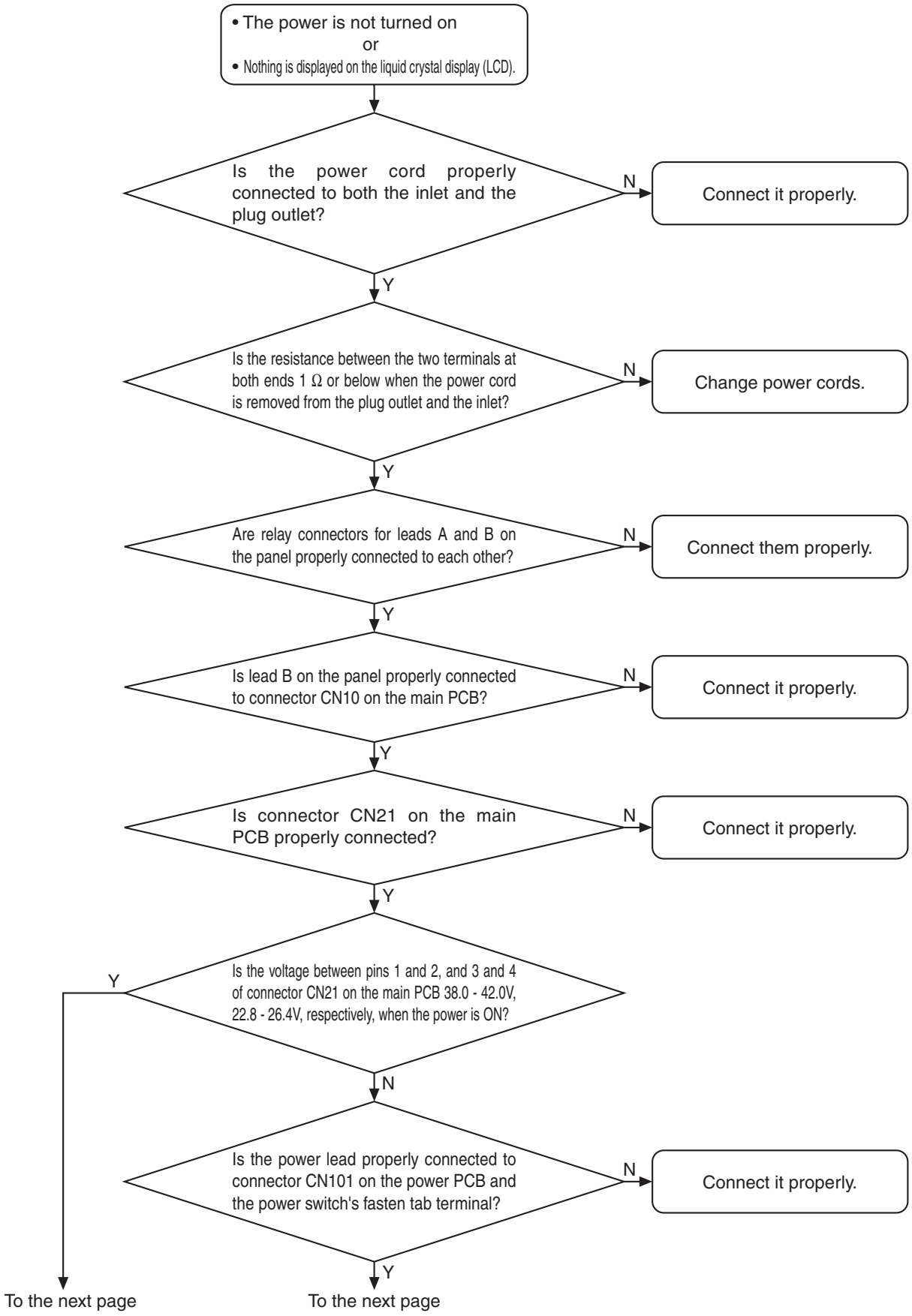

www.promelectroavtomat.ru

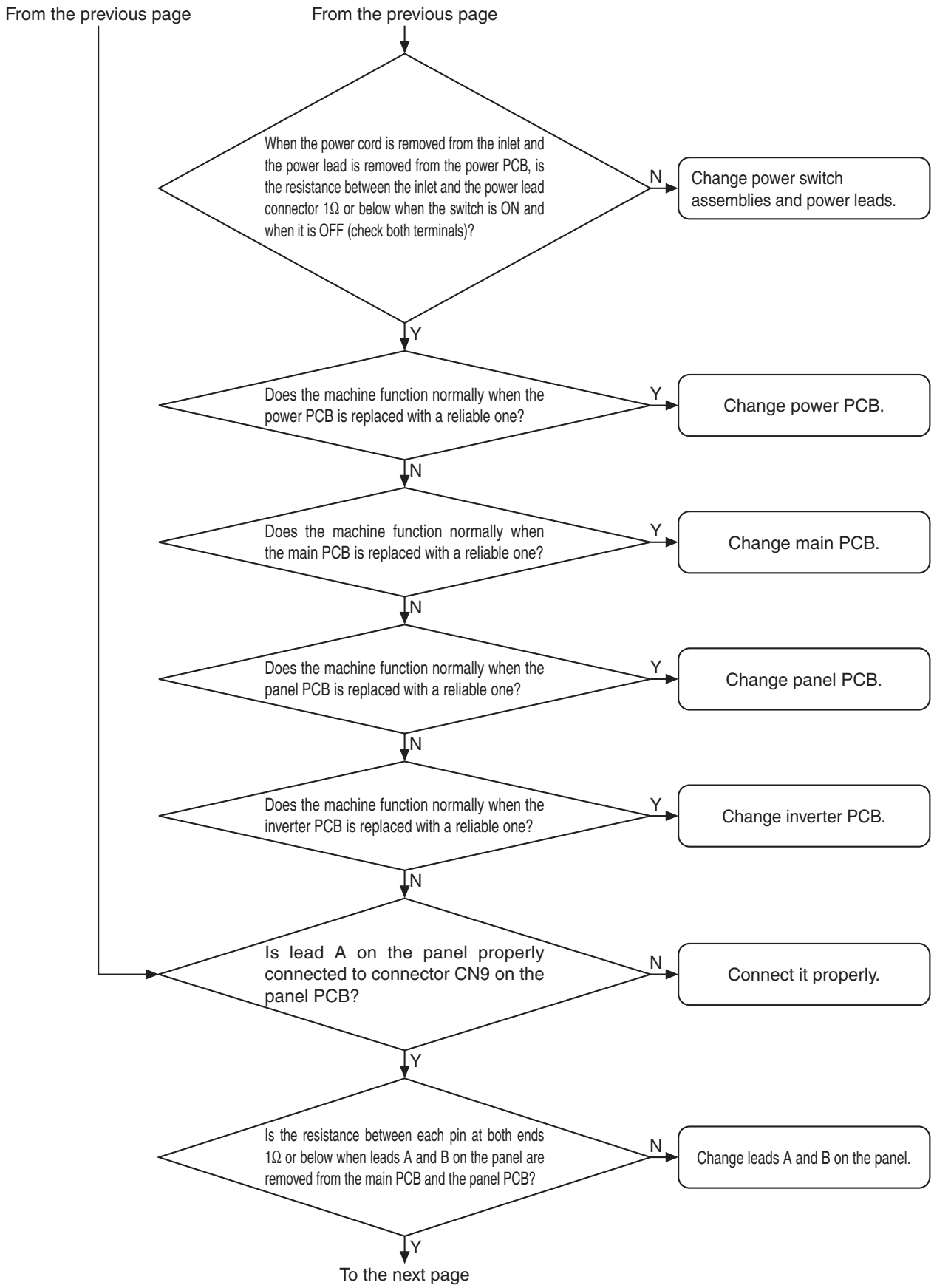

www.promelectroavtomat.ru

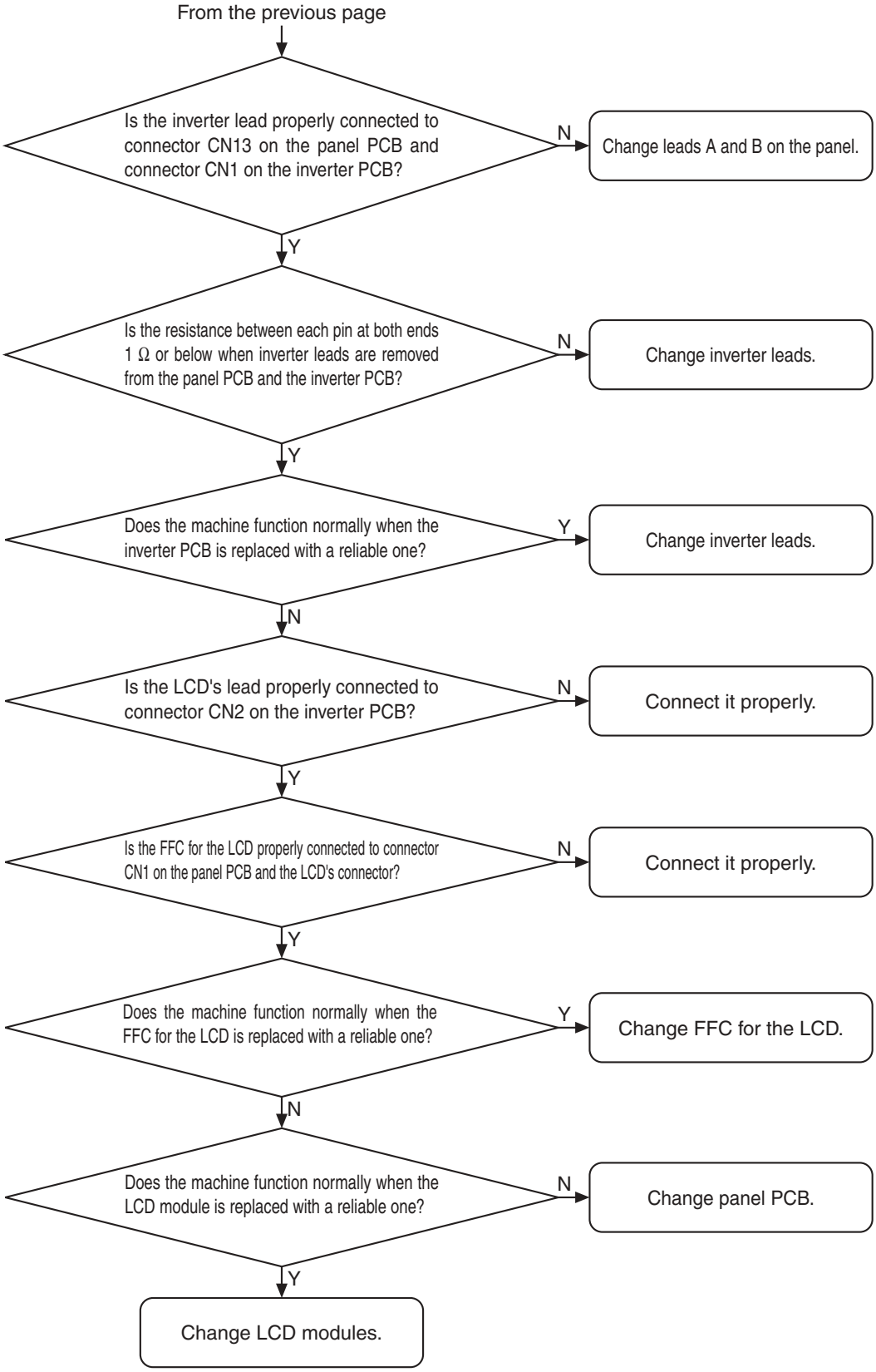

www.promelectroavtomat.ru

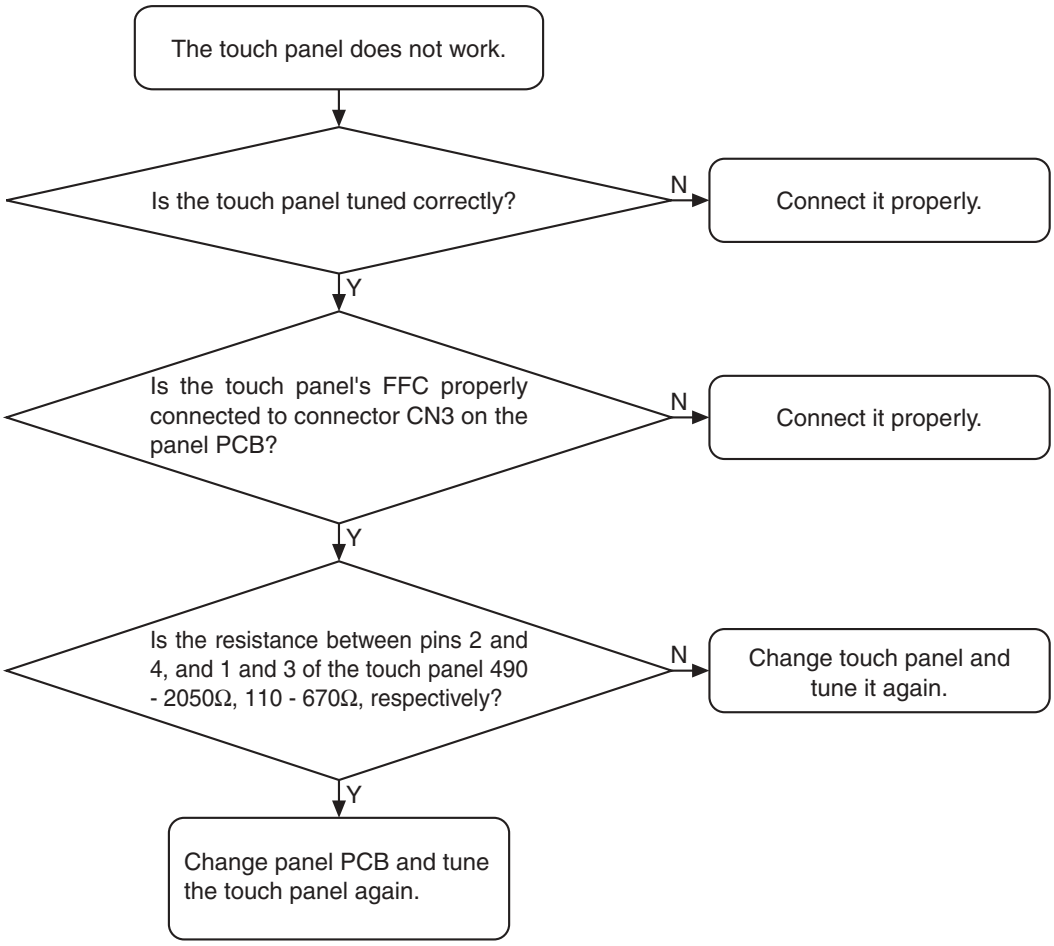

www.promelectroavtomat.ru

The panel switch does not work.

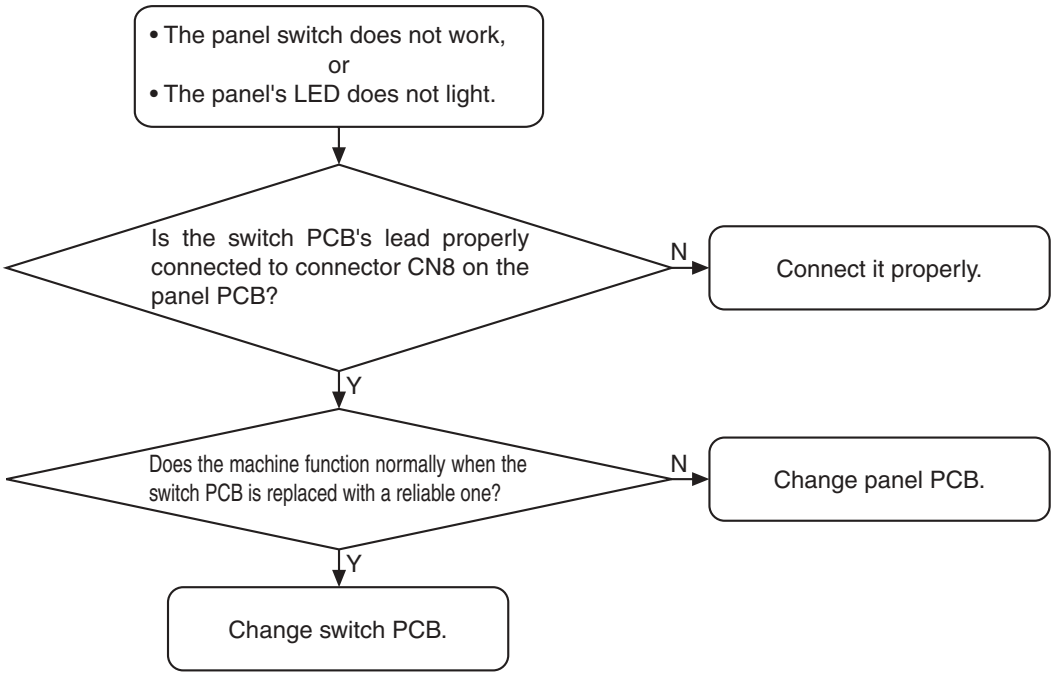

www.promelectroavtomat.ru

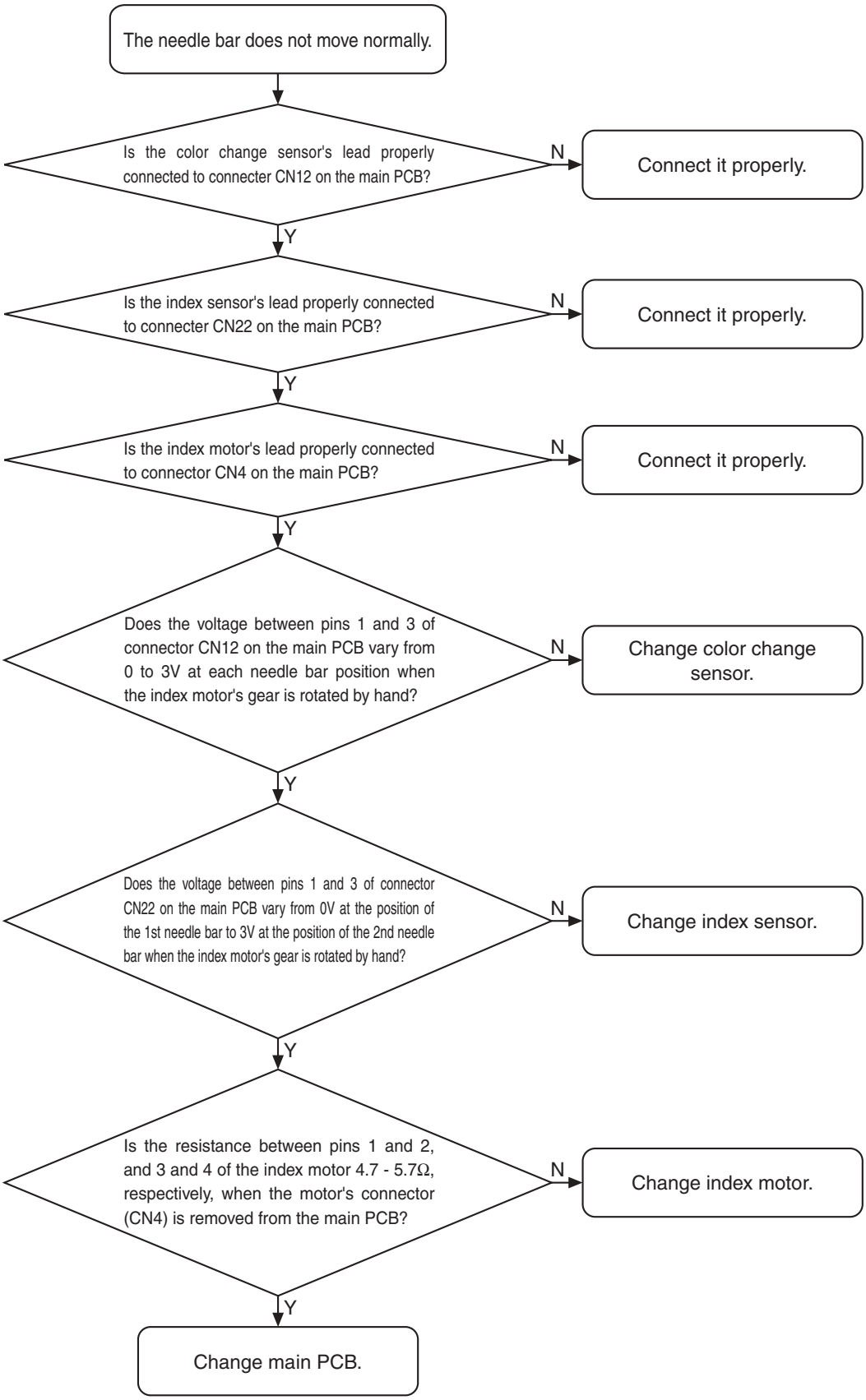

www.promelectroavtomat.ru

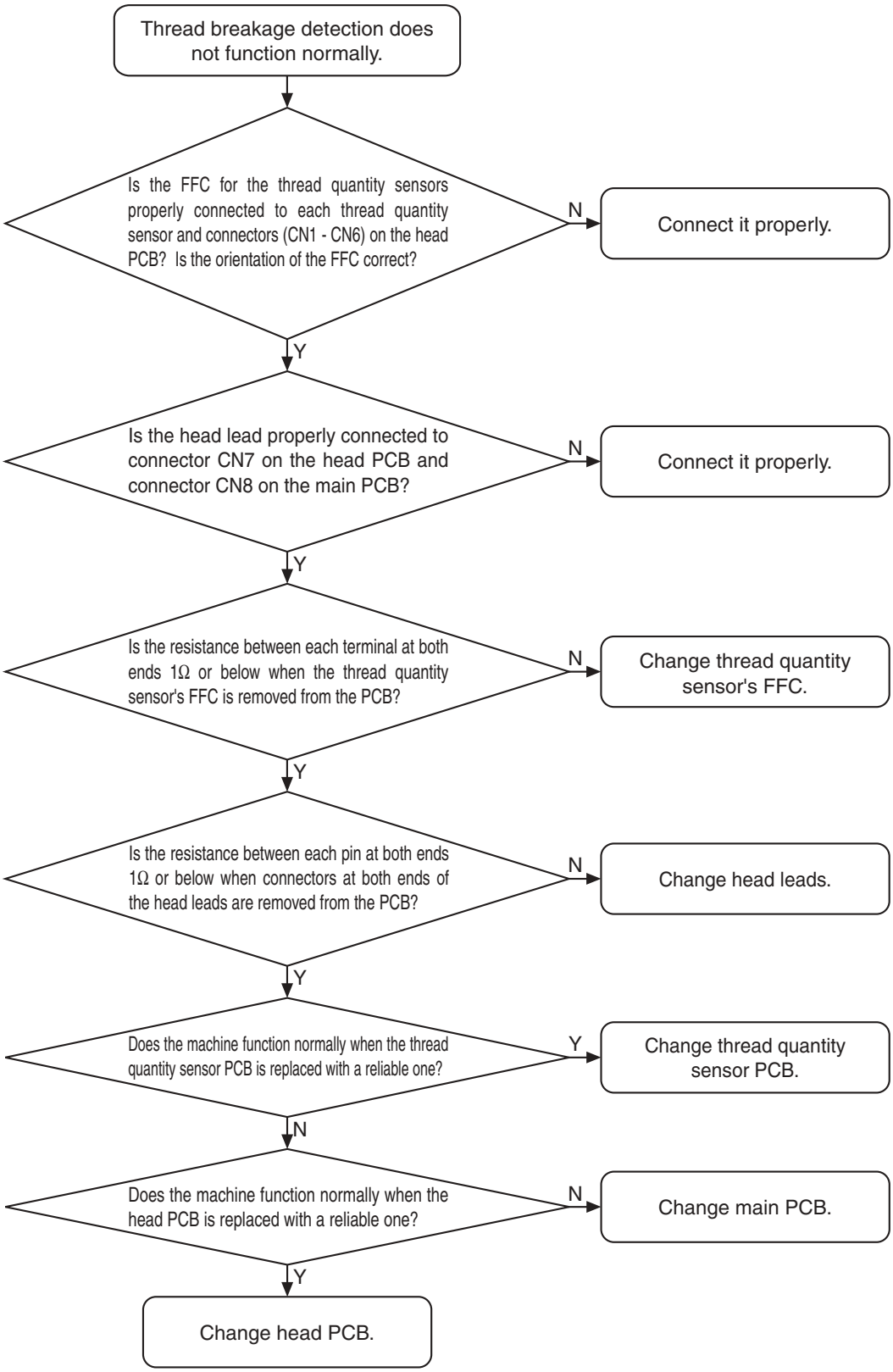

www.promelectroavtomat.ru

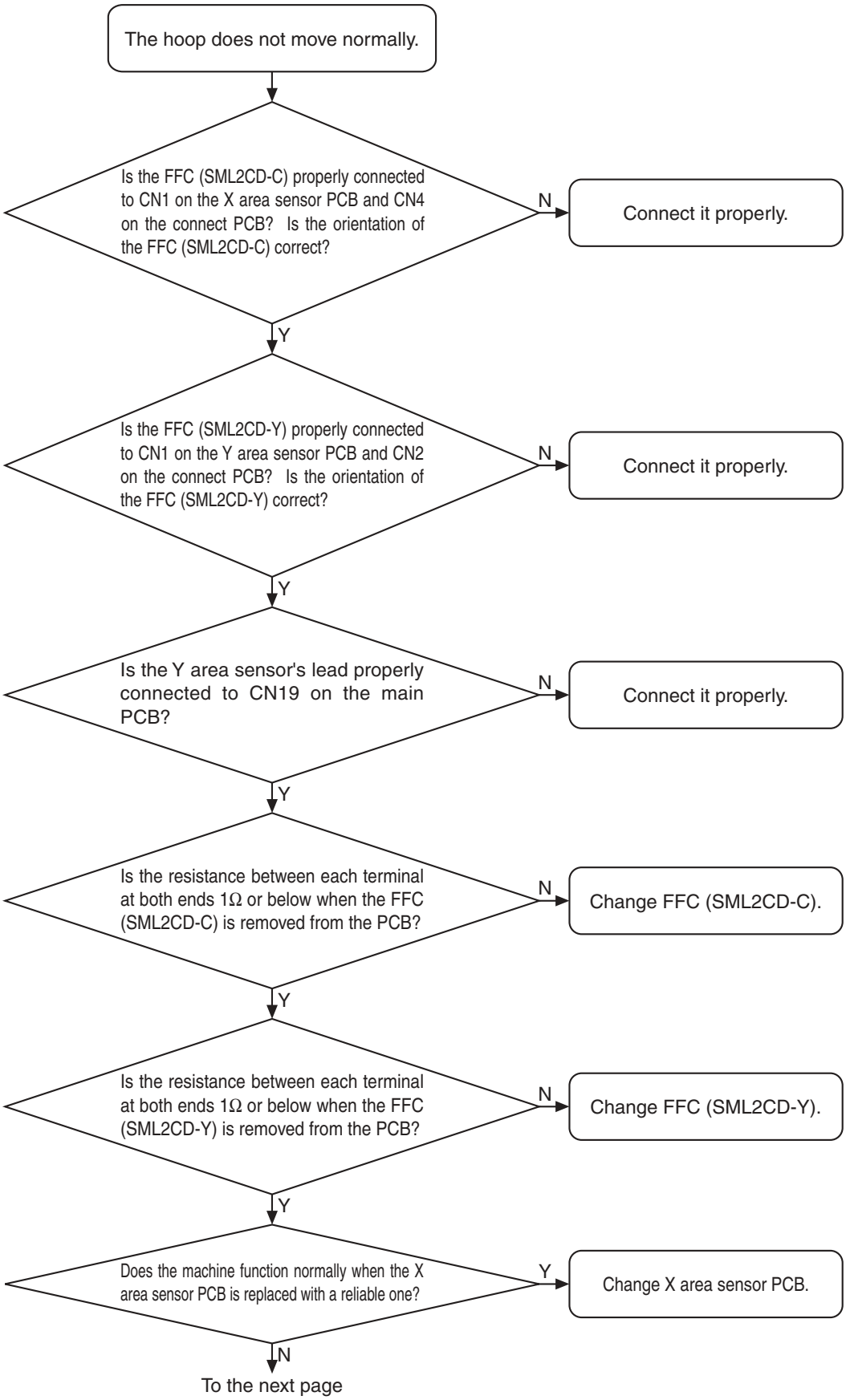

www.promelectroavtomat.ru

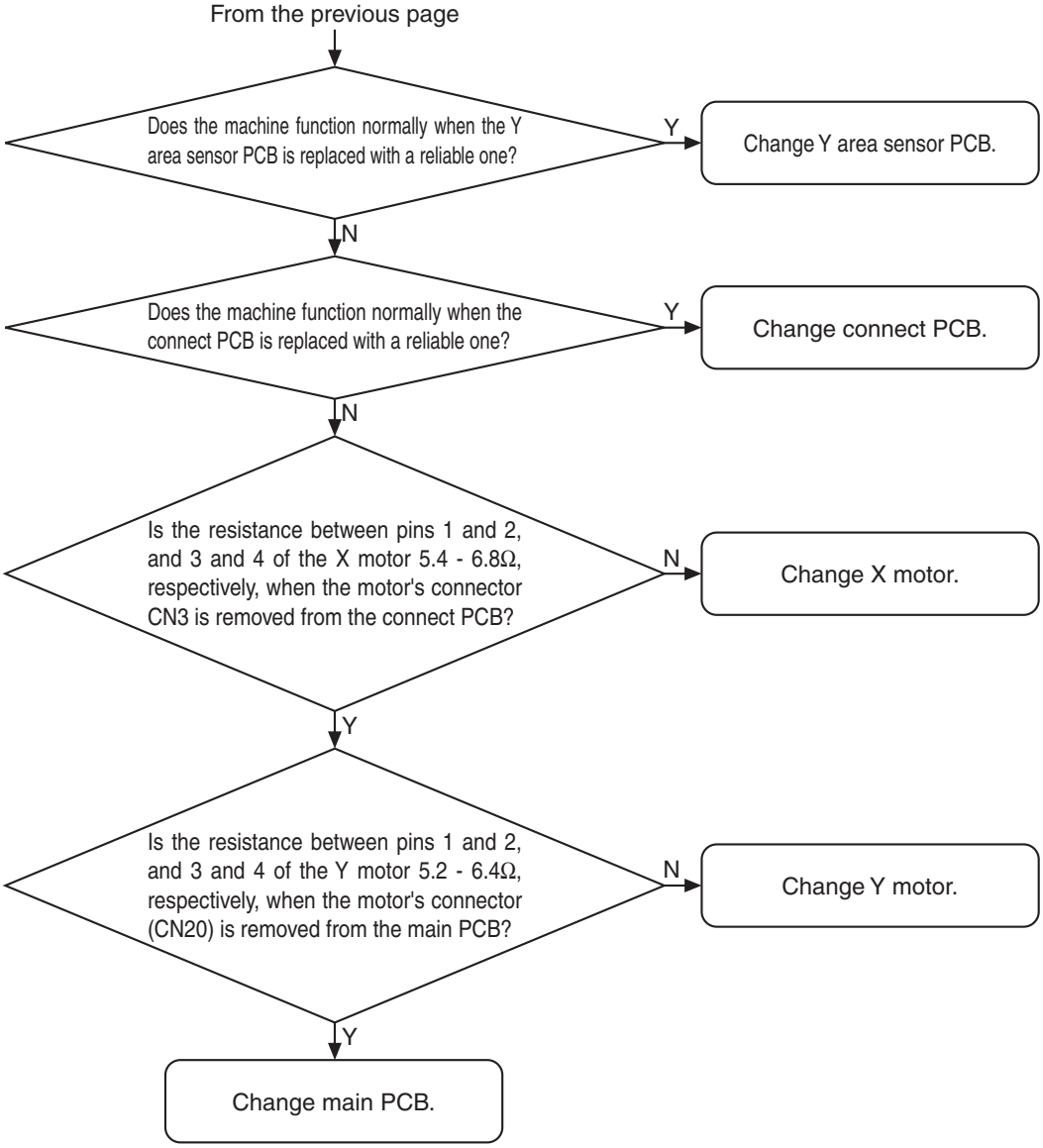

www.promelectroavtomat.ru

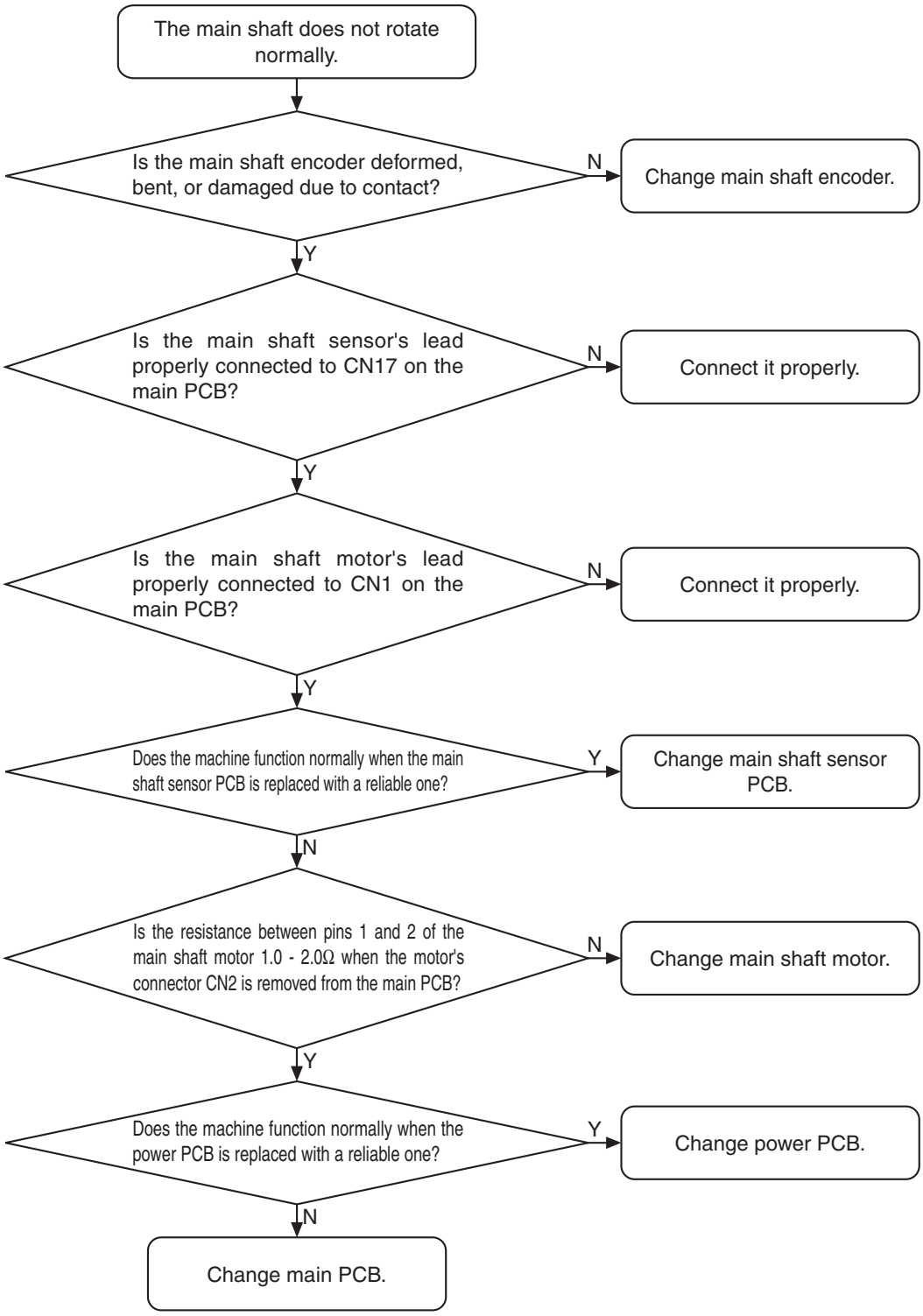

www.promelectroavtomat.ru

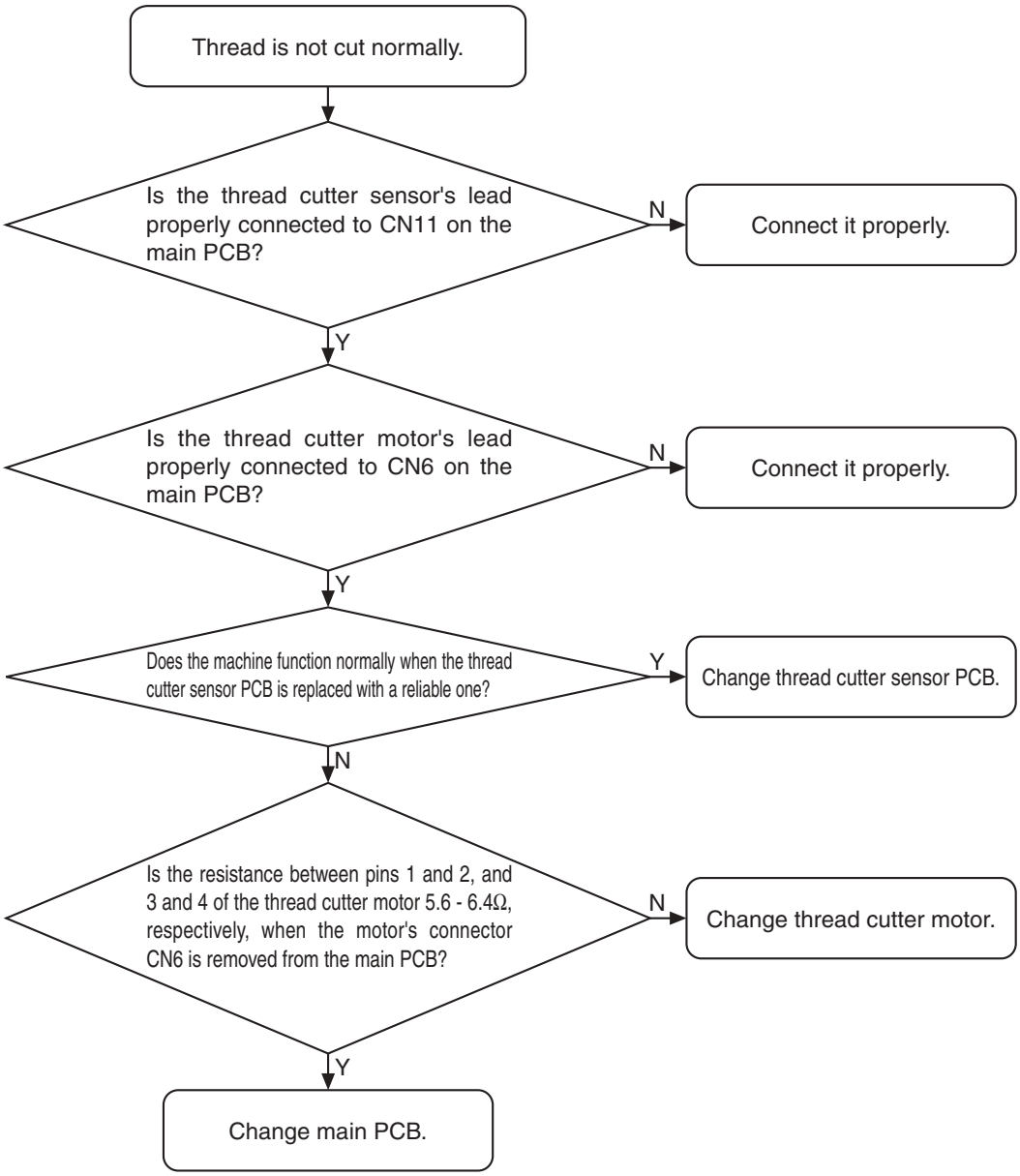

www.promelectroavtomat.ru

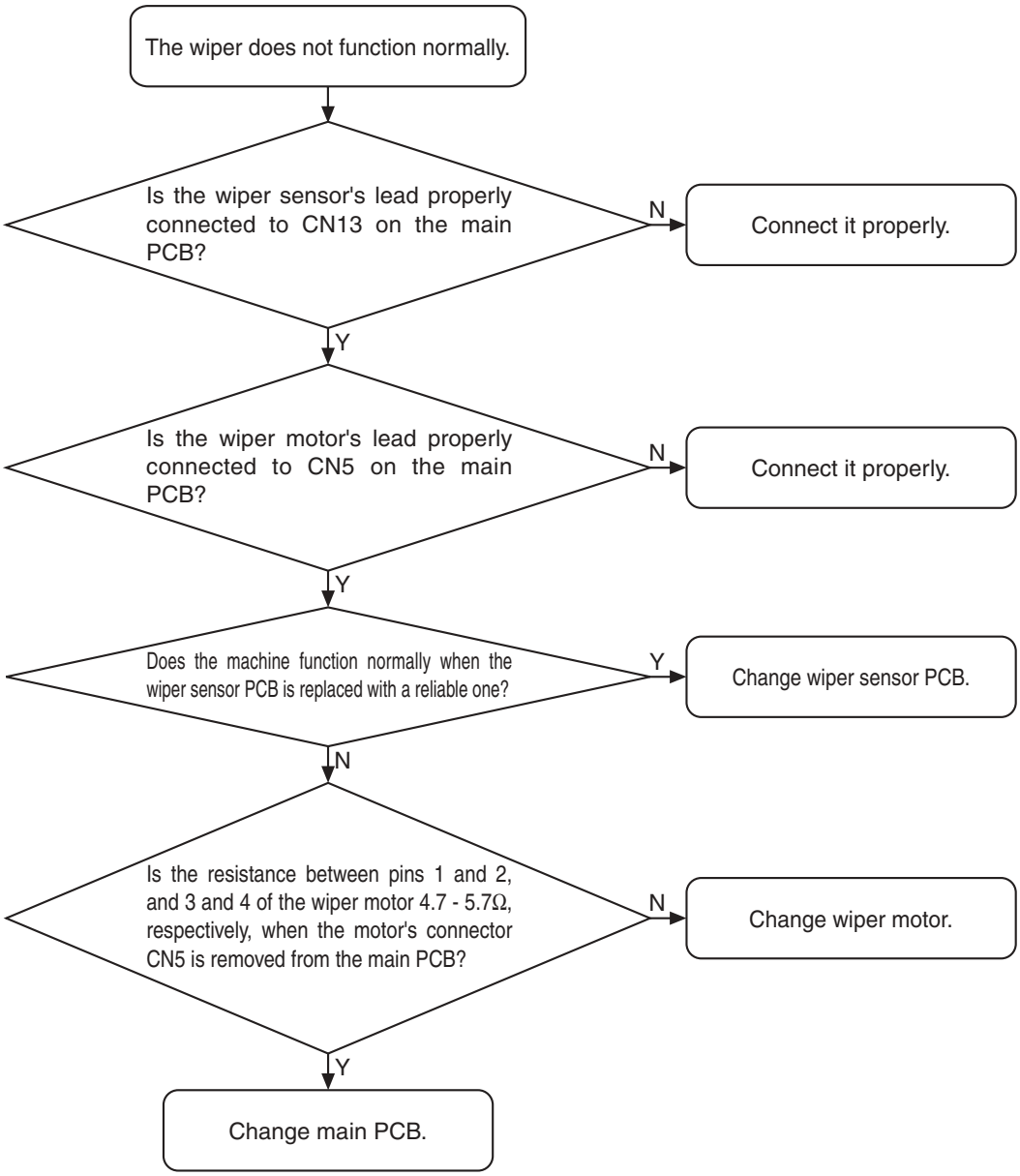

www.promelectroavtomat.ru

A needle is not threaded normally.

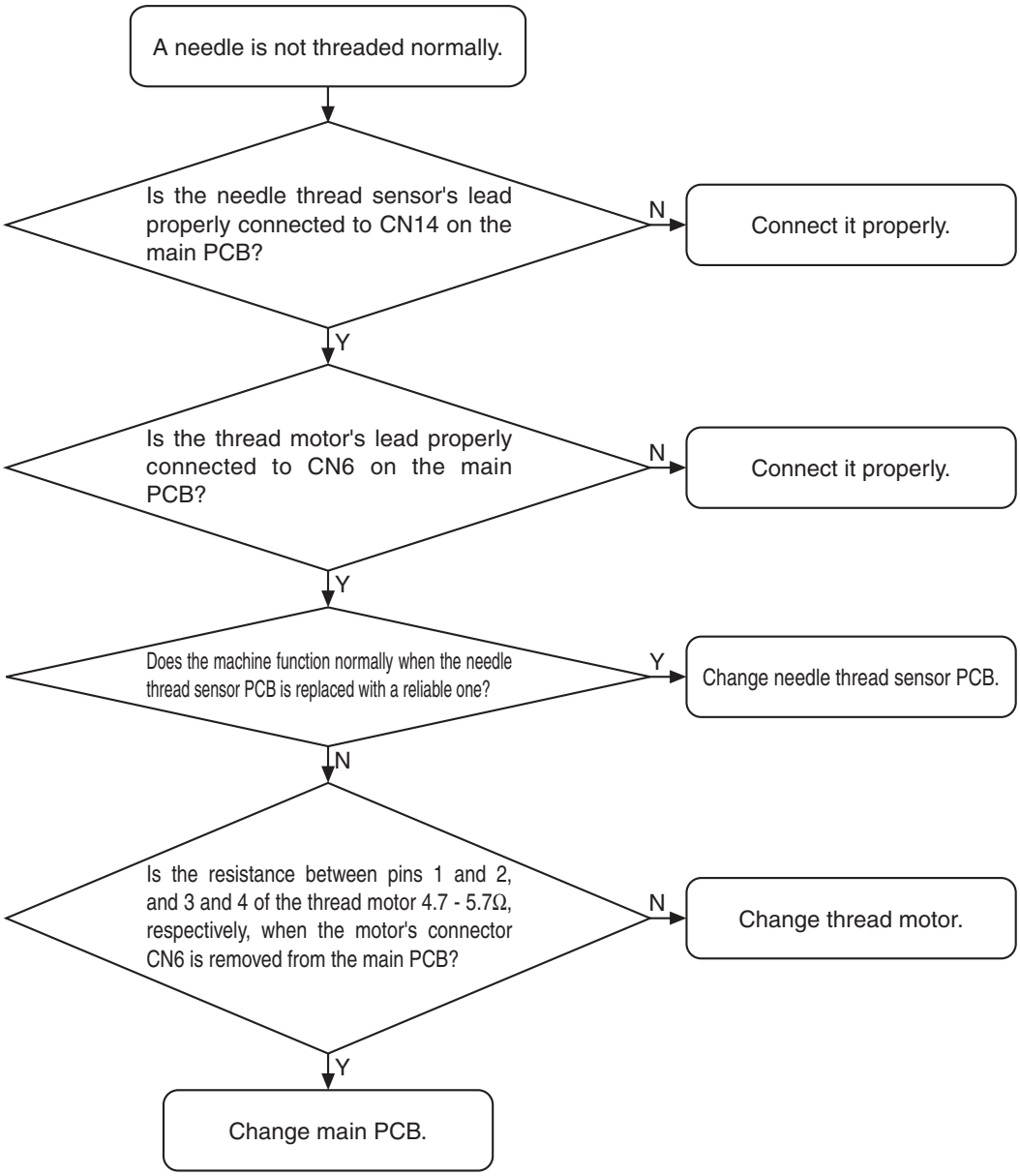

www.promelectroavtomat.ru

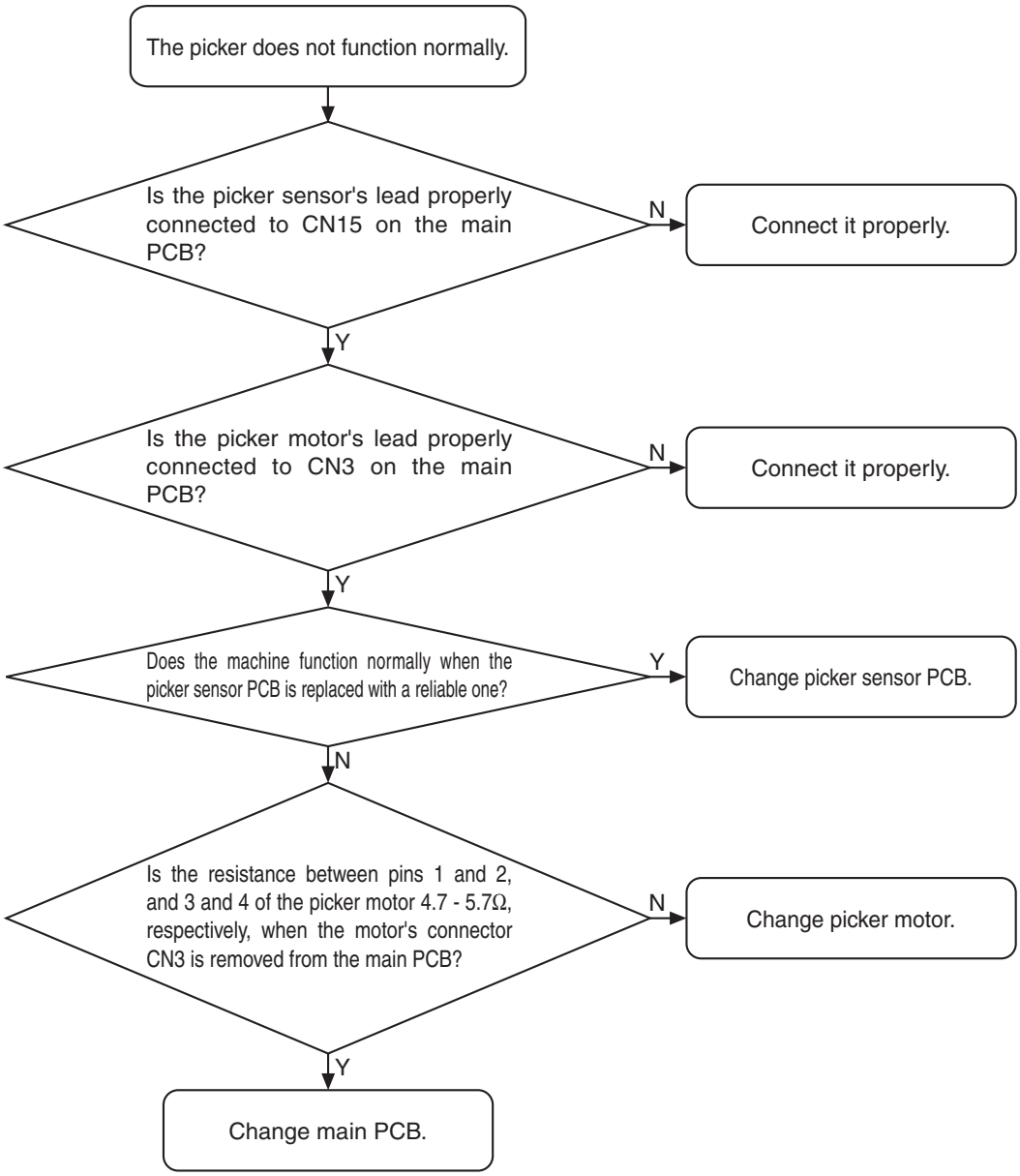

www.promelectroavtomat.ru

The floppy disk cannot be used normally.

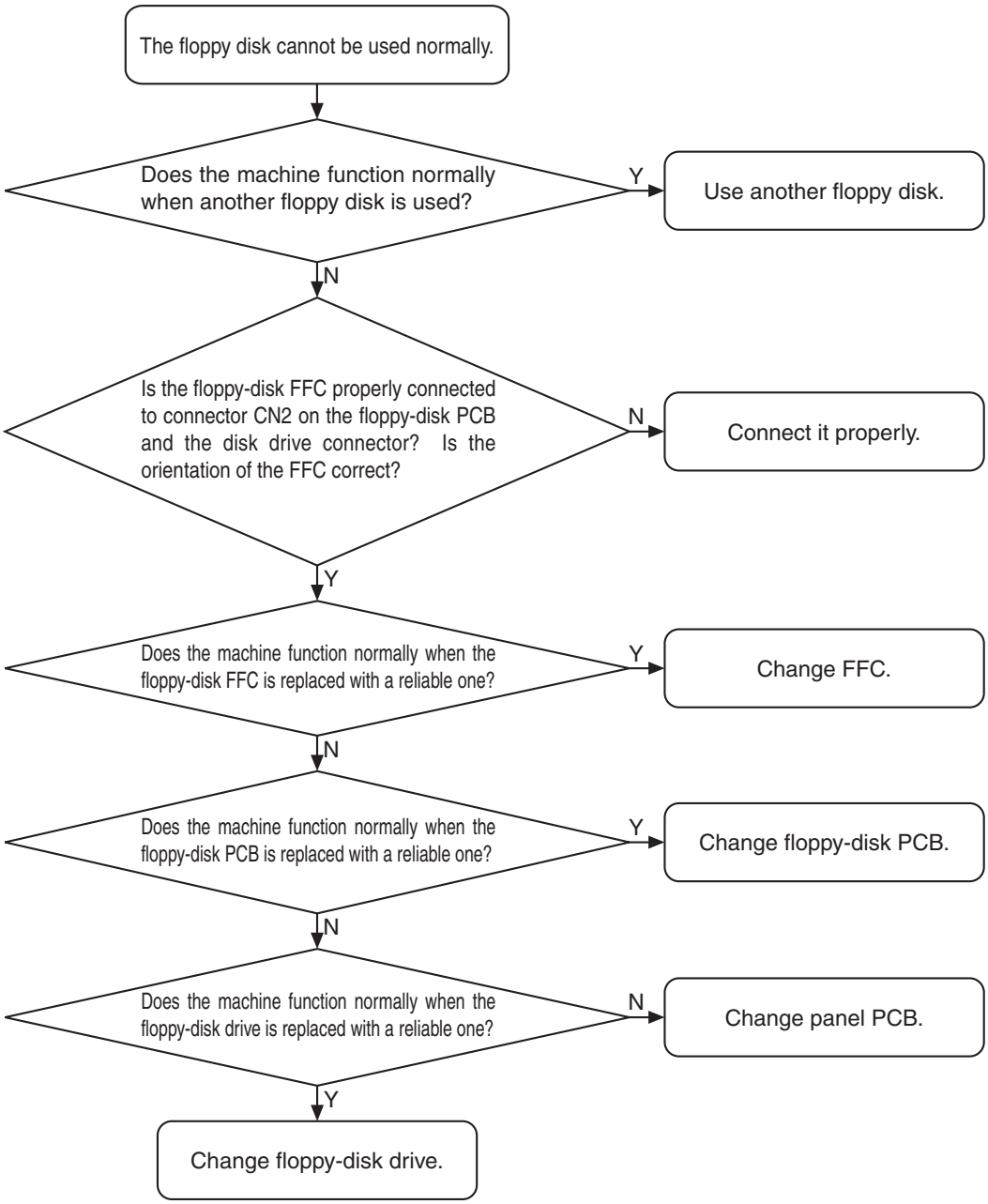

www.promelectroavtomat.ru

Card cannot be used normally.

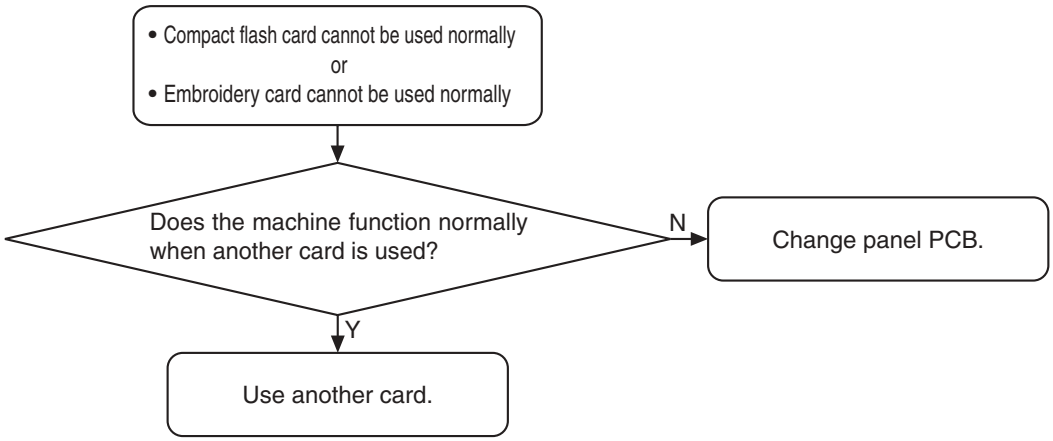

www.promelectroavtomat.ru

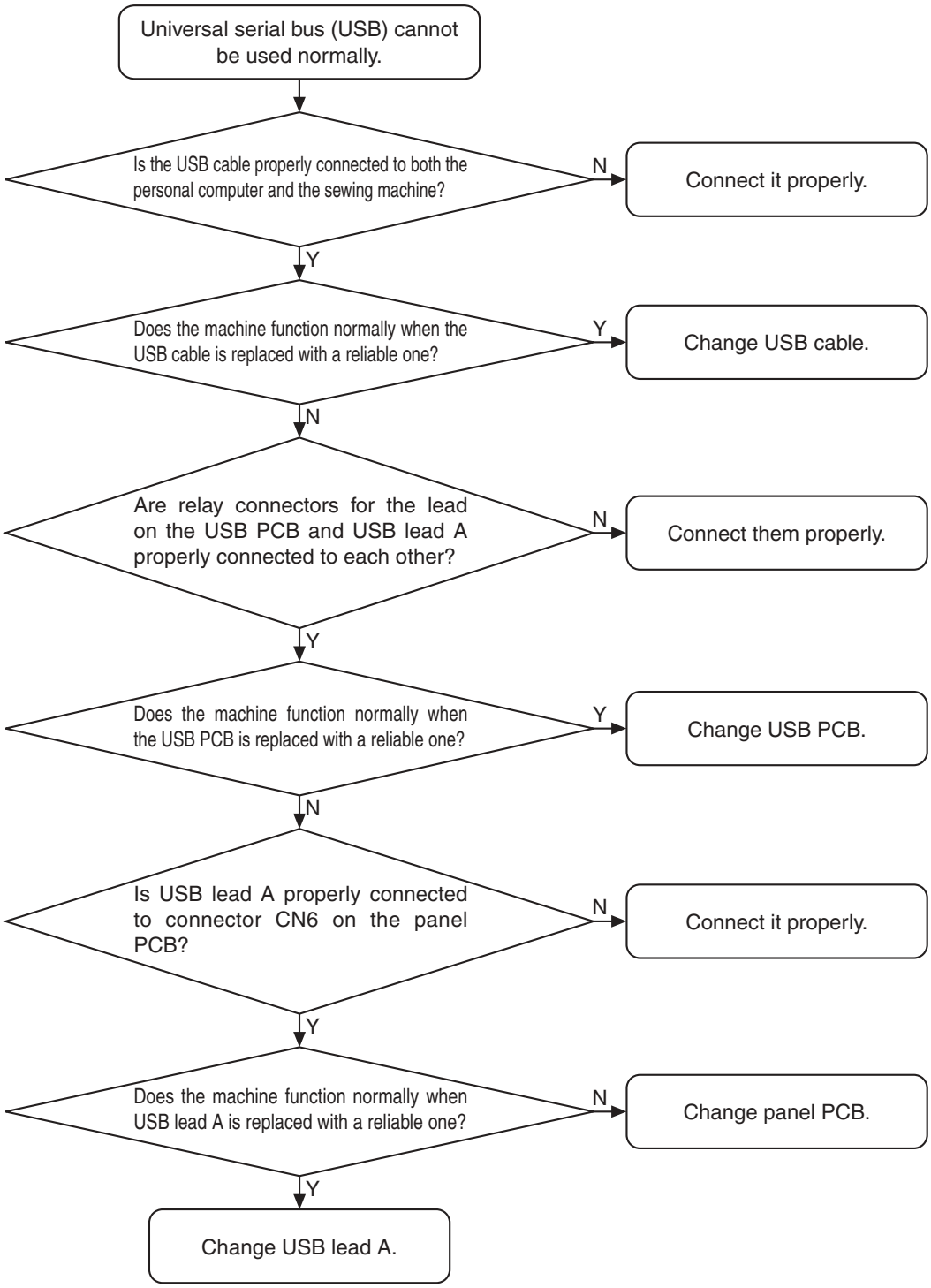

www.promelectroavtomat.ru

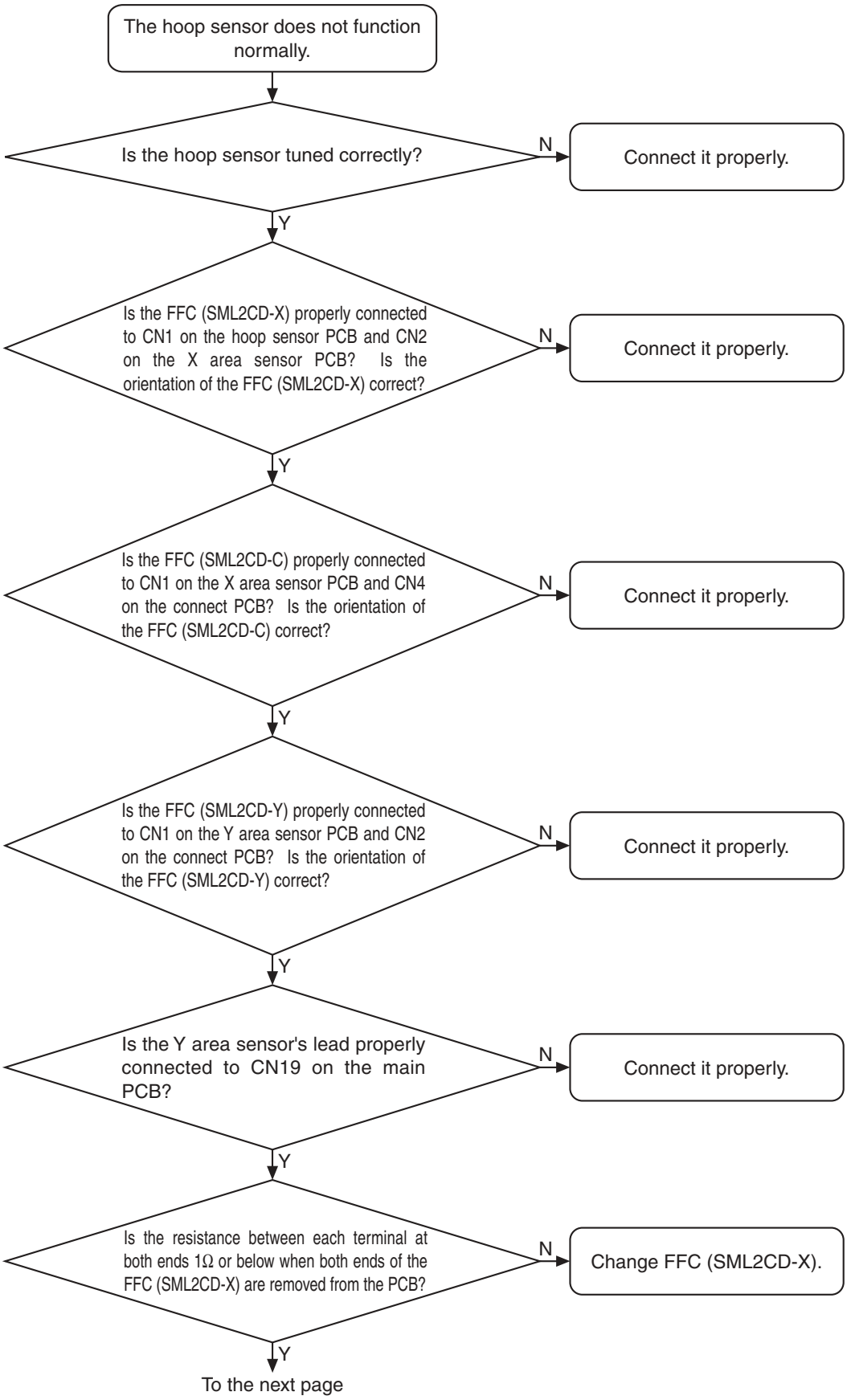

www.promelectroavtomat.ru

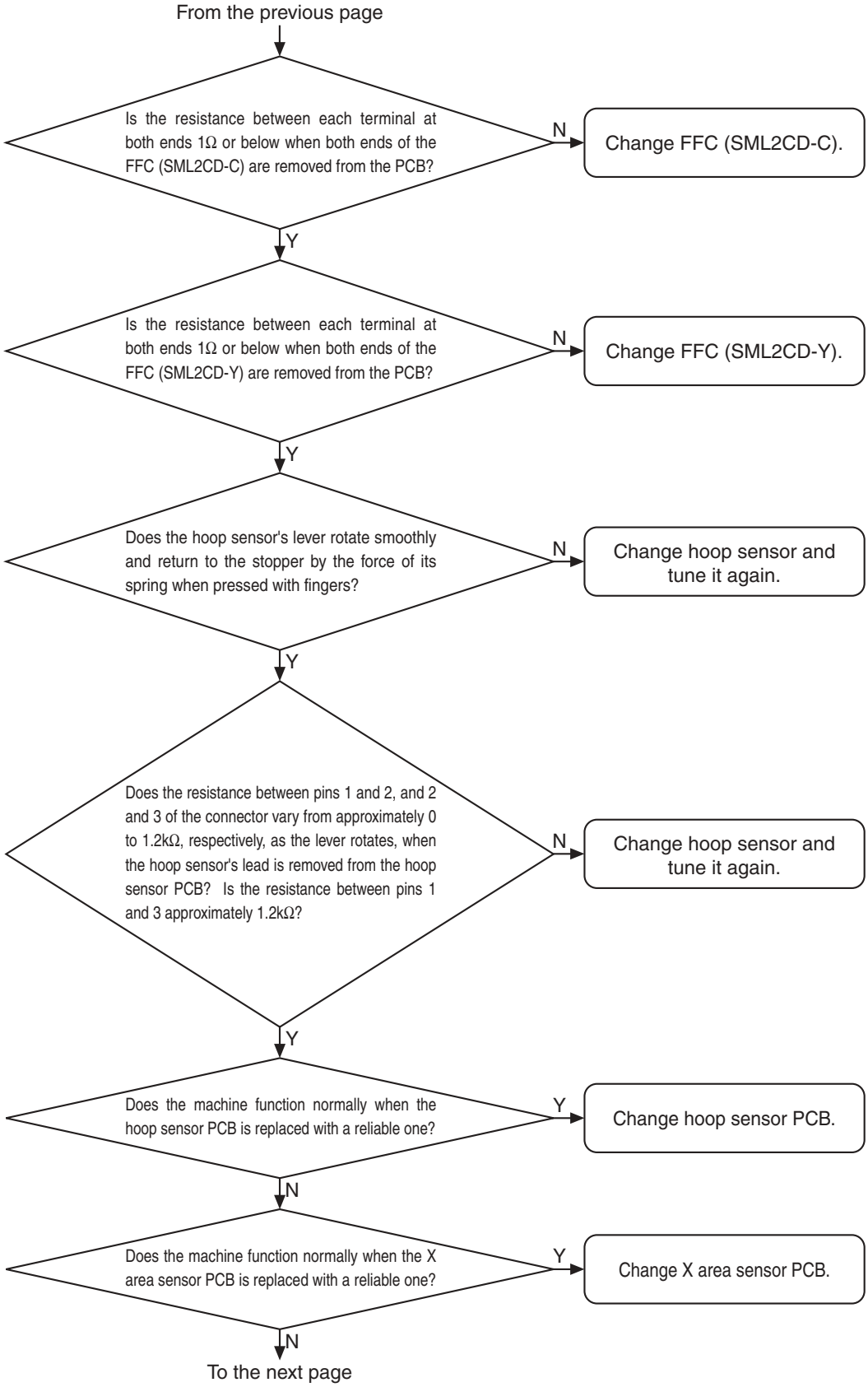

www.promelectroavtomat.ru

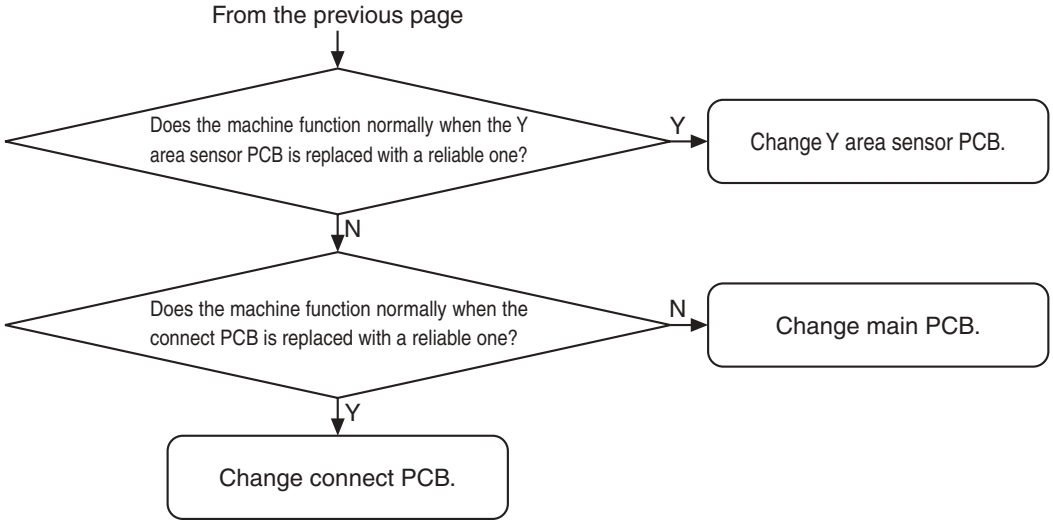

www.promelectroavtomat.ru

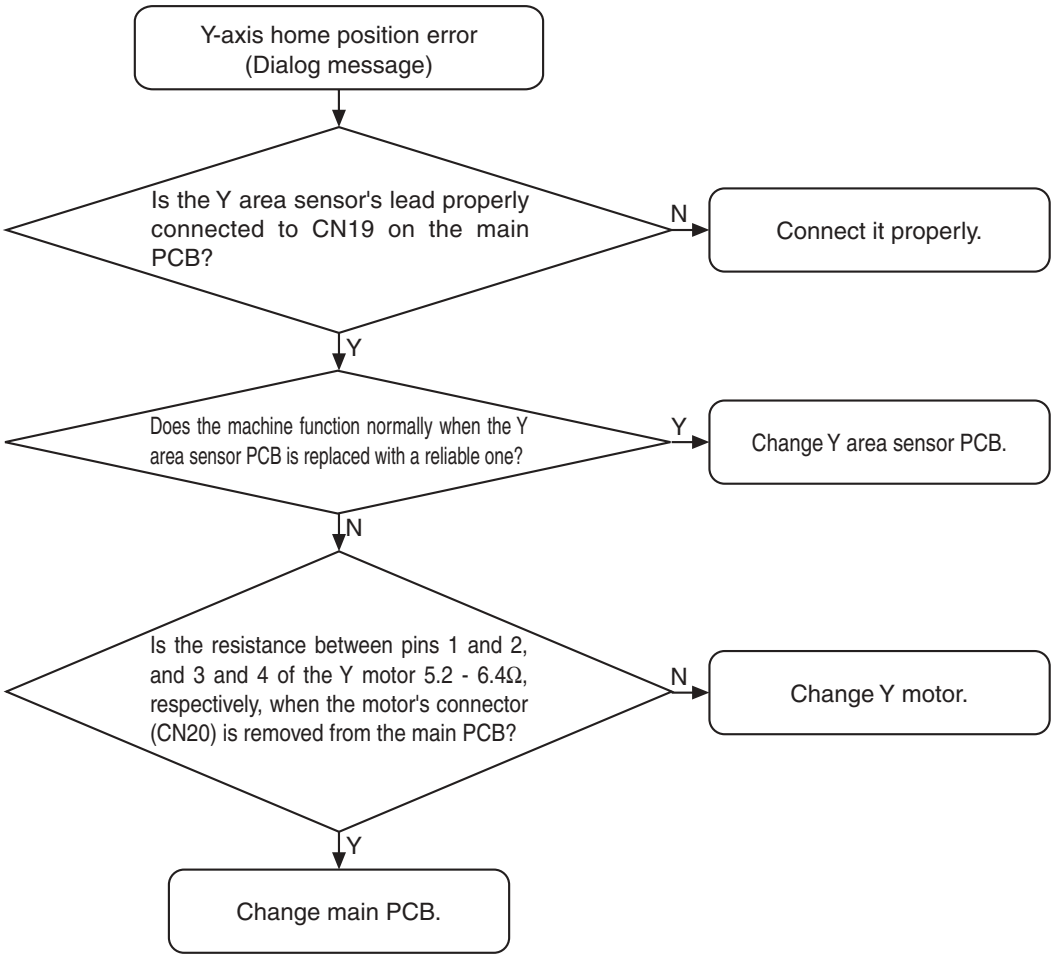

www.promelectroavtomat.ru

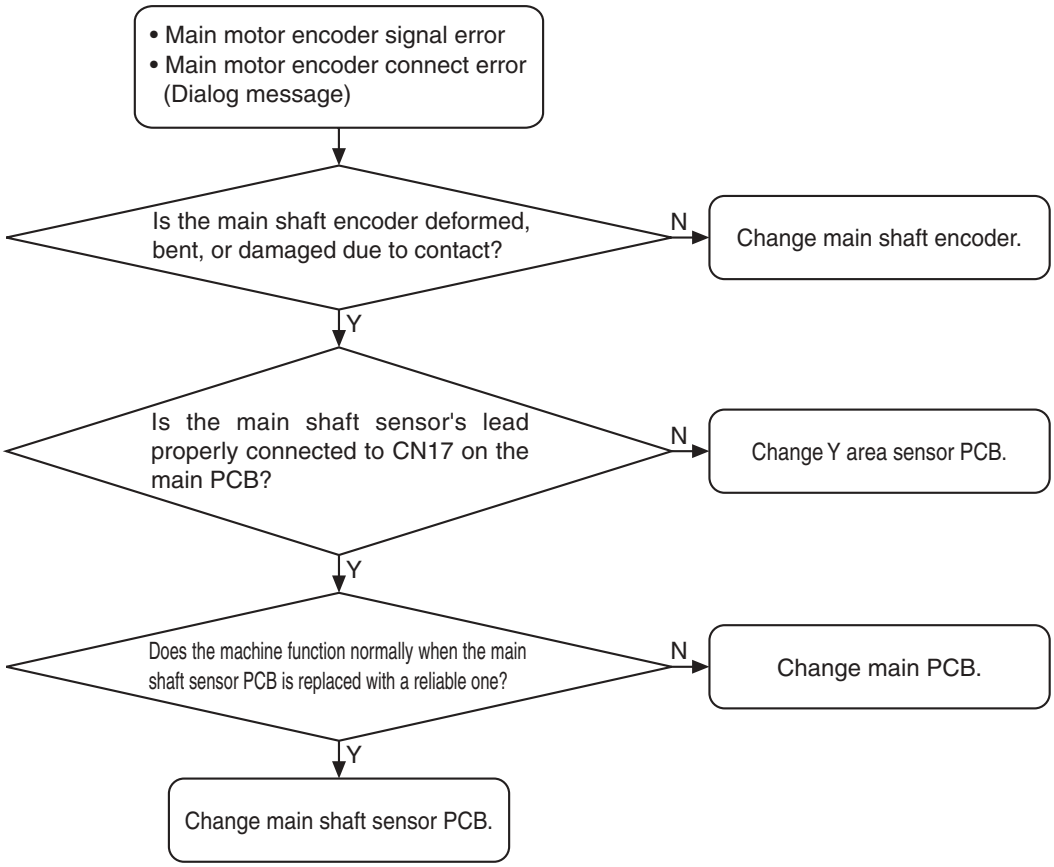

www.promelectroavtomat.ru

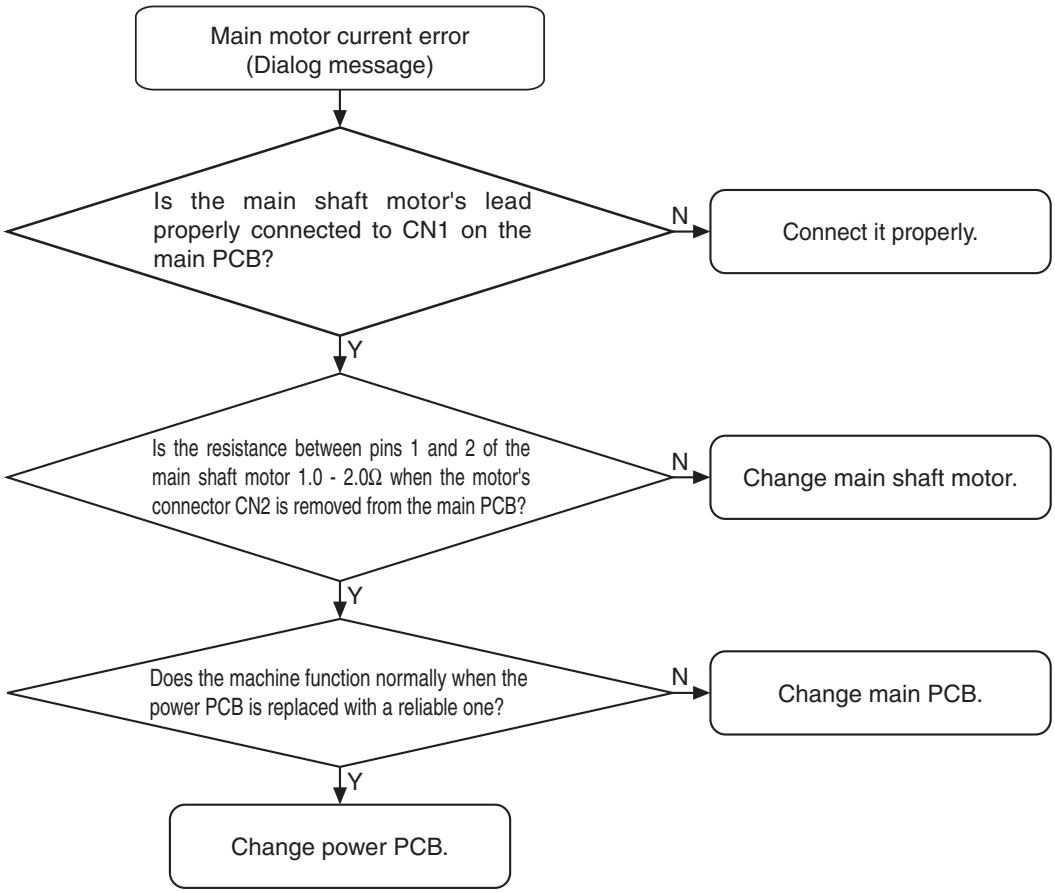

www.promelectroavtomat.ru

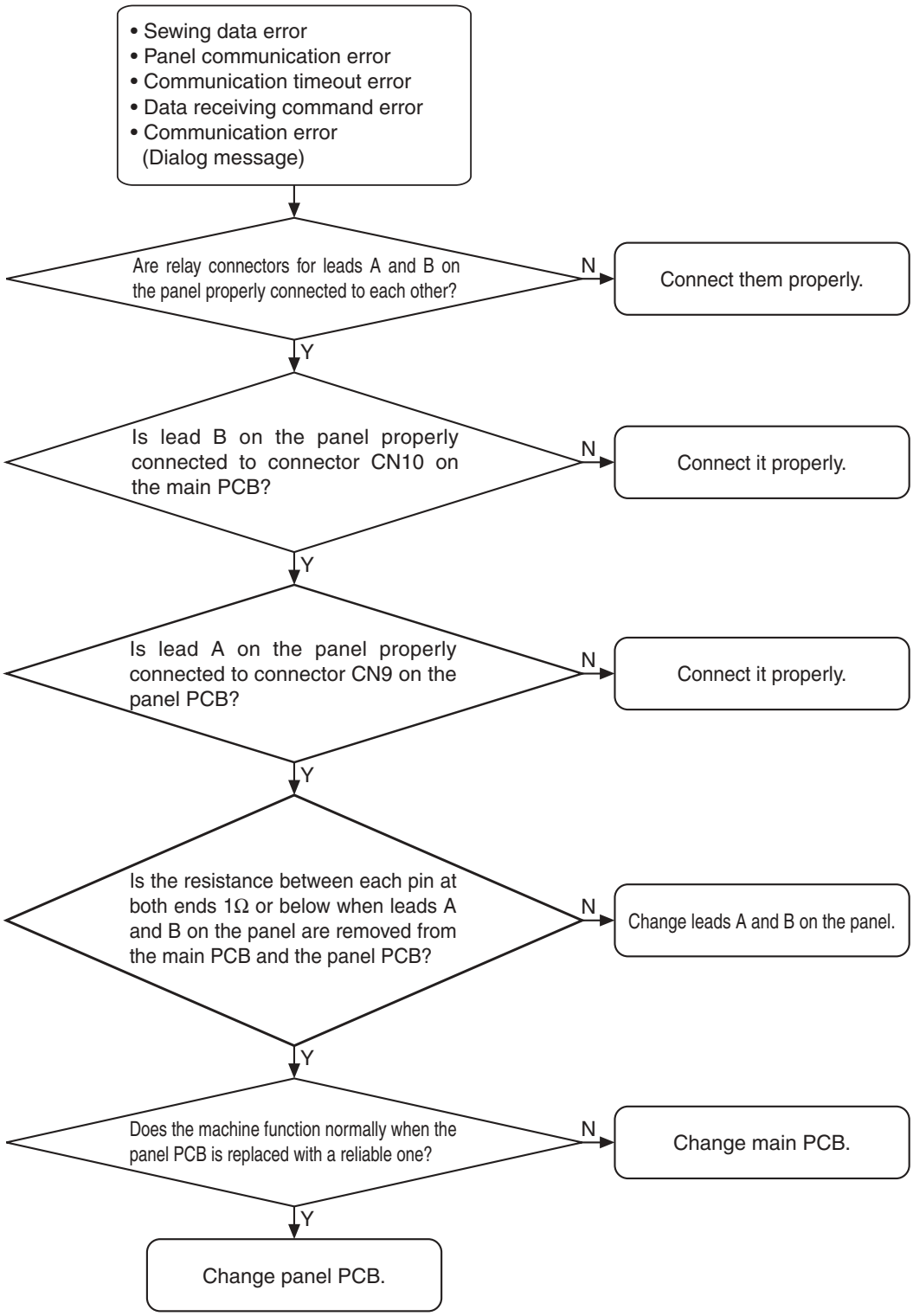

www.promelectroavtomat.ru

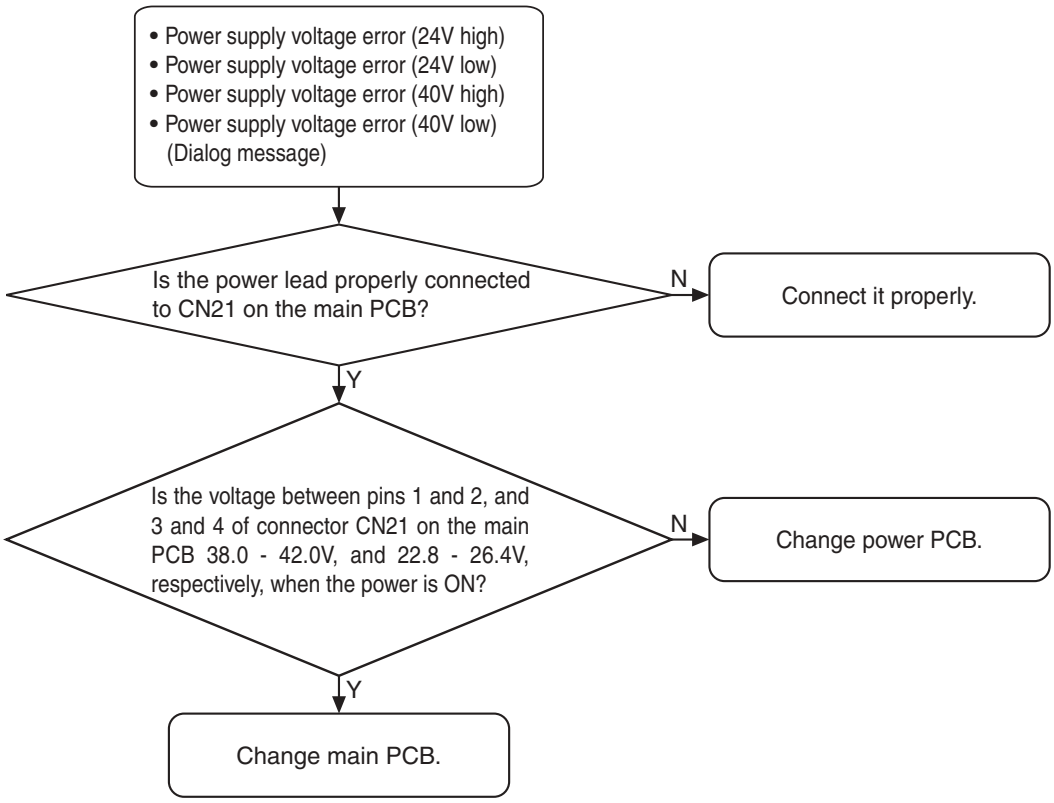

www.promelectroavtomat.ru

www.promelectroavtomat.ru

6 Maintenance

www.promelectroavtomat.ru

Maintenance

1.Maintenance Point by dealer(Every 1,500 hours)

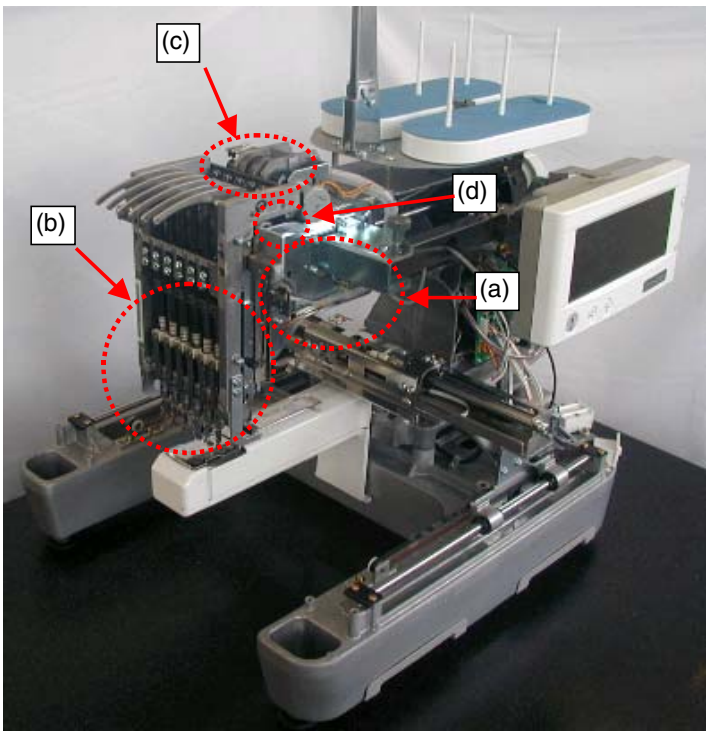

[(a) Thread take-up lever and
Presser foot driving cam]

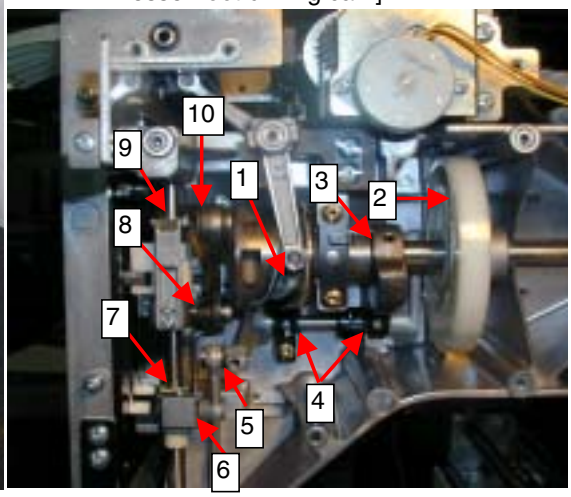

[(b) Needle bar case]

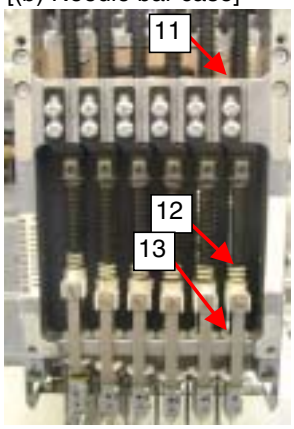

[(c)Change cam]

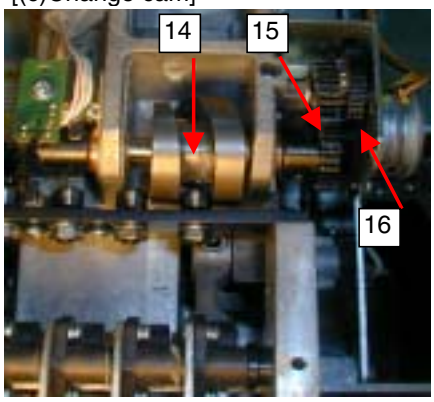

[(d) Thread take-up driving lever]

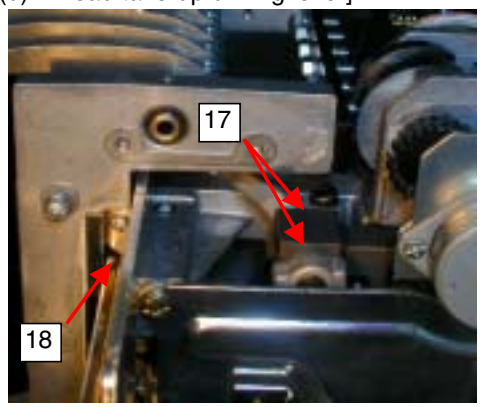

	Name of grease/oil	Quantity	Check point
1	MOLYKOTE EM-30L	1.0cm³	Check presser foot height
2	MOLYKOTE EM-30L	1.0cm³	
3	FBK OIL RO 100	three drops	
4	FBK OIL RO 100	one drop	
5	MOLYKOTE M55plus	one drop	
6	MOLYKOTE M55plus	one drop	
7	MOLYKOTE EM-30L	0.3cm³	
8	MOLYKOTE M55plus	one drop	
9	MOLYKOTE EM-30L	0.3cm³	
10	MOLYKOTE EM-30L	0.3cm³	
11	OILER	one drop	
12	OILER	three drops	
13	OILER	one drop	
14	MOLYKOTE EM-30L	1.0cm³	
15	MOLYKOTE EM-30L	0.3cm³	
16	MOLYKOTE EM-30L	0.3cm³	
17	MOLYKOTE EM-30L	0.3cm³	
18	MOLYKOTE EM-30L	0.3cm³	

www.promelectroavtomat.ru

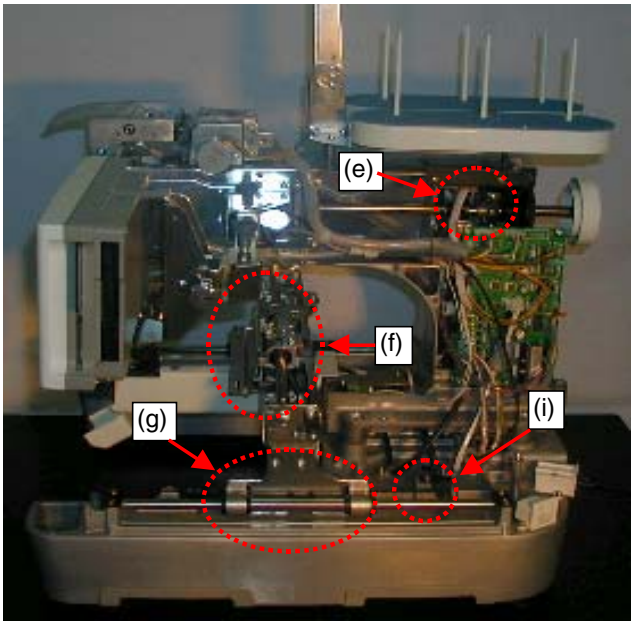

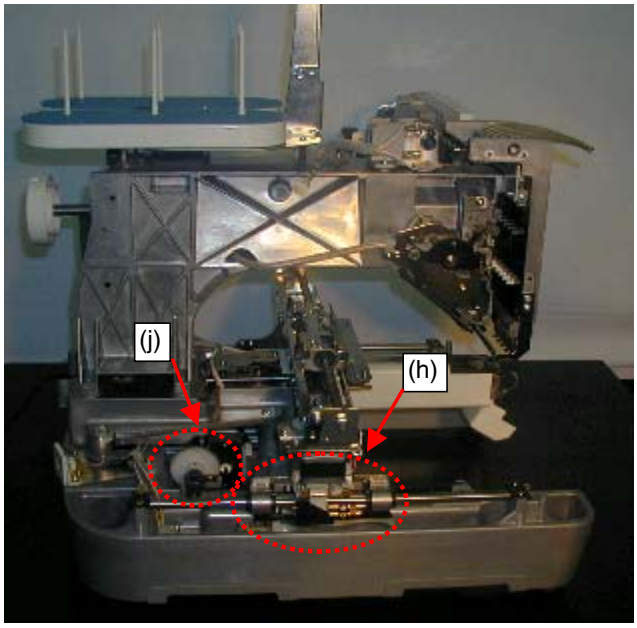

[(e) Upper shaft bushing(R)]

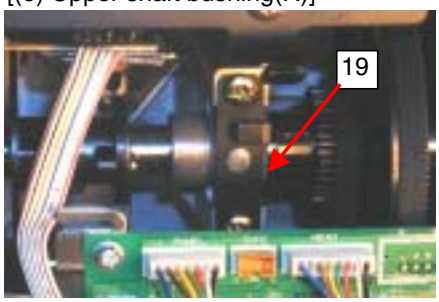

	Name of grease/oil	Quantity	Check point
19	FBK OIL RO 100	three drops	Check motor belt tension Check timing belt tension

[(f) X carriage]

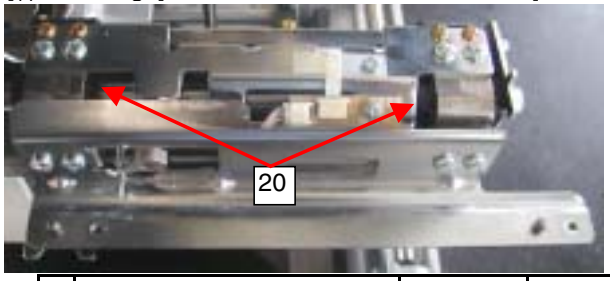

[Cleanning of X driving gear]

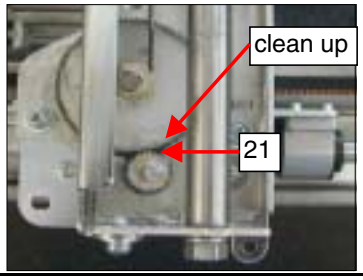

[Removal of dust from X sensor]

	Name of grease/oil	Quantity	Check point
20	MOLYKOTE EM-30L	0.6cm³	Check X belt tension
21	MOLYKOTE EM-30L	0.6cm³	Check X belt presser

[(g) Y carriage(R)]

[(h) Y carriage(L)]

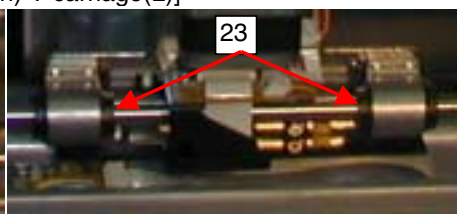

[Removal of dust from Y sensor]

	Name of grease/oil	Quantity	Check point
22	MOLYKOTE EM-30L	0.6cm³	Check Y belt tension
23	MOLYKOTE EM-30L	0.6cm³	Check Y belt presser

www.promelectroavtomat.ru

[(i) Y driving shaft(R)]

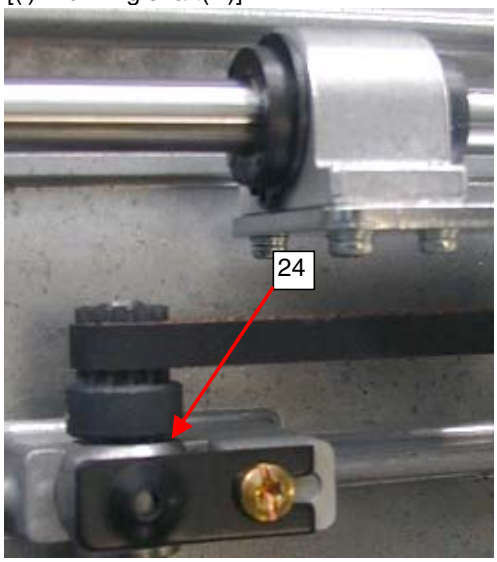

[(j) Y driving shaft(L)]

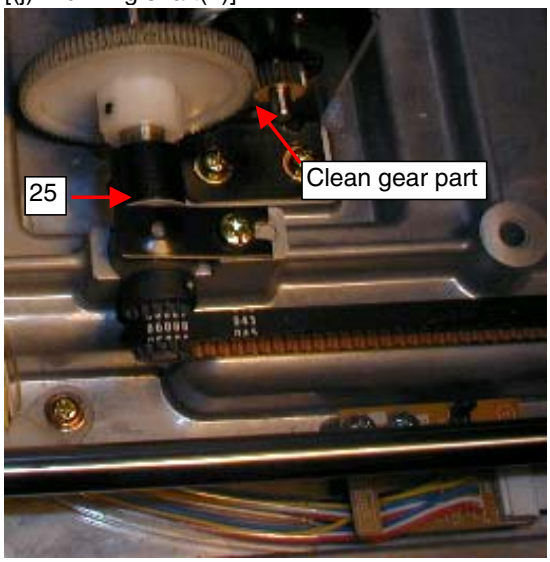

	Name of grease/oil	Quantity
24	FBK OIL RO 100	one drop
25	FBK OIL RO 100	one drop

[Rotary hook and Lower shaft bushing]

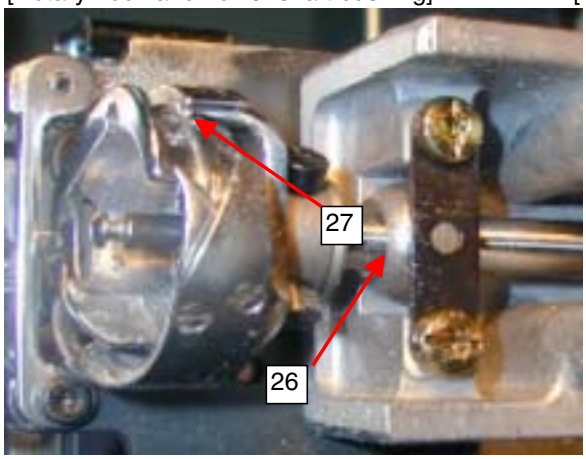

[Lower shaft bushing and Lower shaft gear]

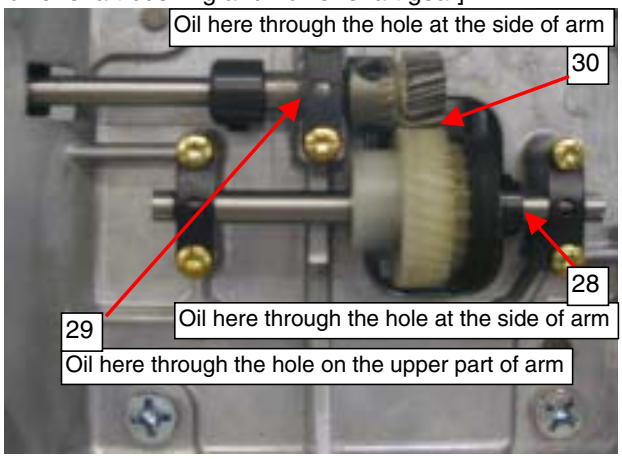

	Name of grease/oil	Quantity	Check point
26	FBK OIL RO 100	one drop	Check thrust play of lower shaft.
27	OILER	one drop	Remove dust around rotary hook and bushing.
28	FBK OIL RO 100	one drop	
29	FBK OIL RO 100	one drop	*There should be no dust between lower
30	MOLYKOTE EM-30L	0.3cm^3	shaft and bushing.

www.promelectroavtomat.ru

•.Maintenance Point by dealer(Every 500 hours)

Maintenance needs to be carriedout on a machine at 500 hours use,if the machine is used for industrial purpose.

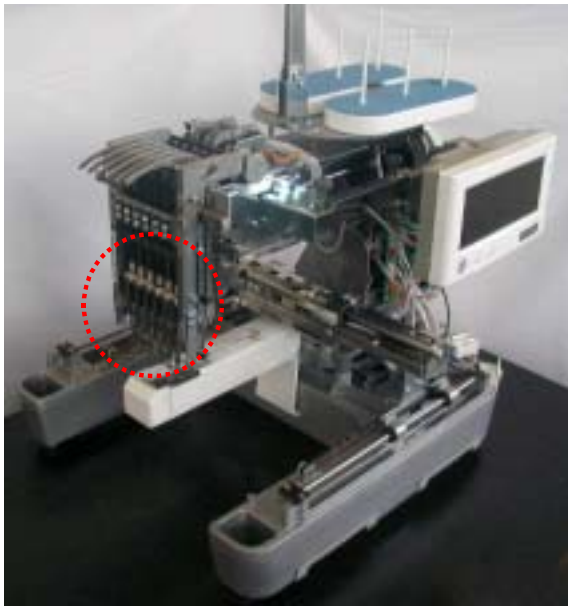

[Needle bar case]

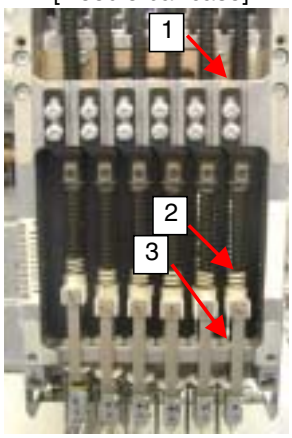

	Name of grease/oil	Quantity
1	OILER	one drop
2	OILER	three drops
3	OILER	one drop

www.promelectroavtomat.ru

[Cleaning of Knives and Rotary hook]

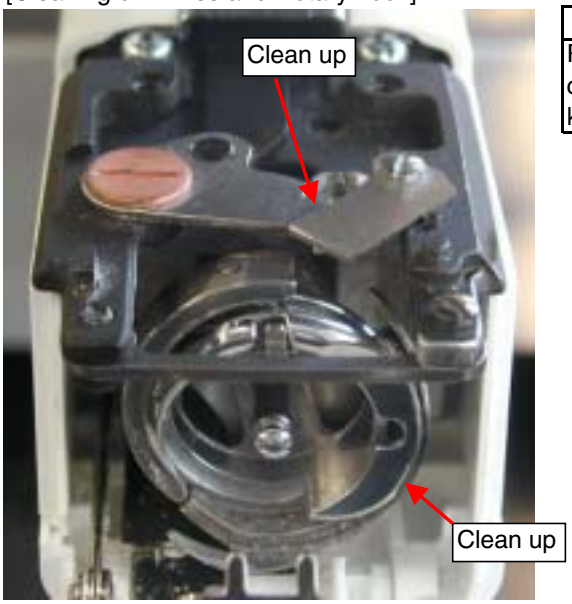

Maintenance
Remove the needle plate. Use the included cleaning brush to remove any lint and dust from knives and rotary hook.

[Oil rotary hook]

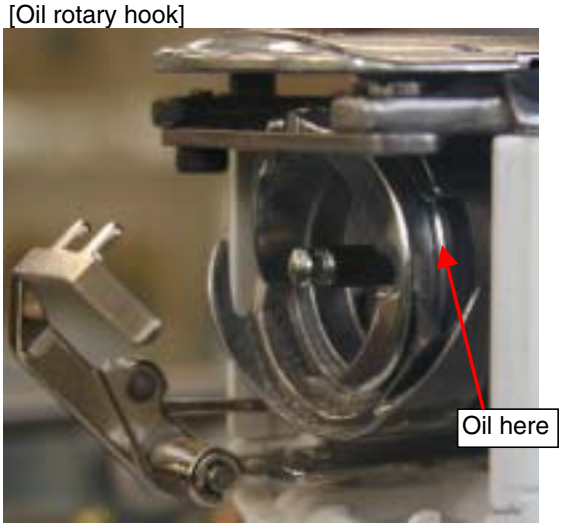

Maintenance
Remove bobbin case and apply 1 drop of oil into the hook race. Then spread it on whole hook with

[Cleaning of bobbin case]

Maintenance
Remove any lint and dust between tension-adjusting spring and bobbin case, whenever one prewound bobbin (coats) is used.

www.promelectroavtomat.ru

7 Special Instructions of Wiring

www.promelectroavtomat.ru

1. Left side of Base

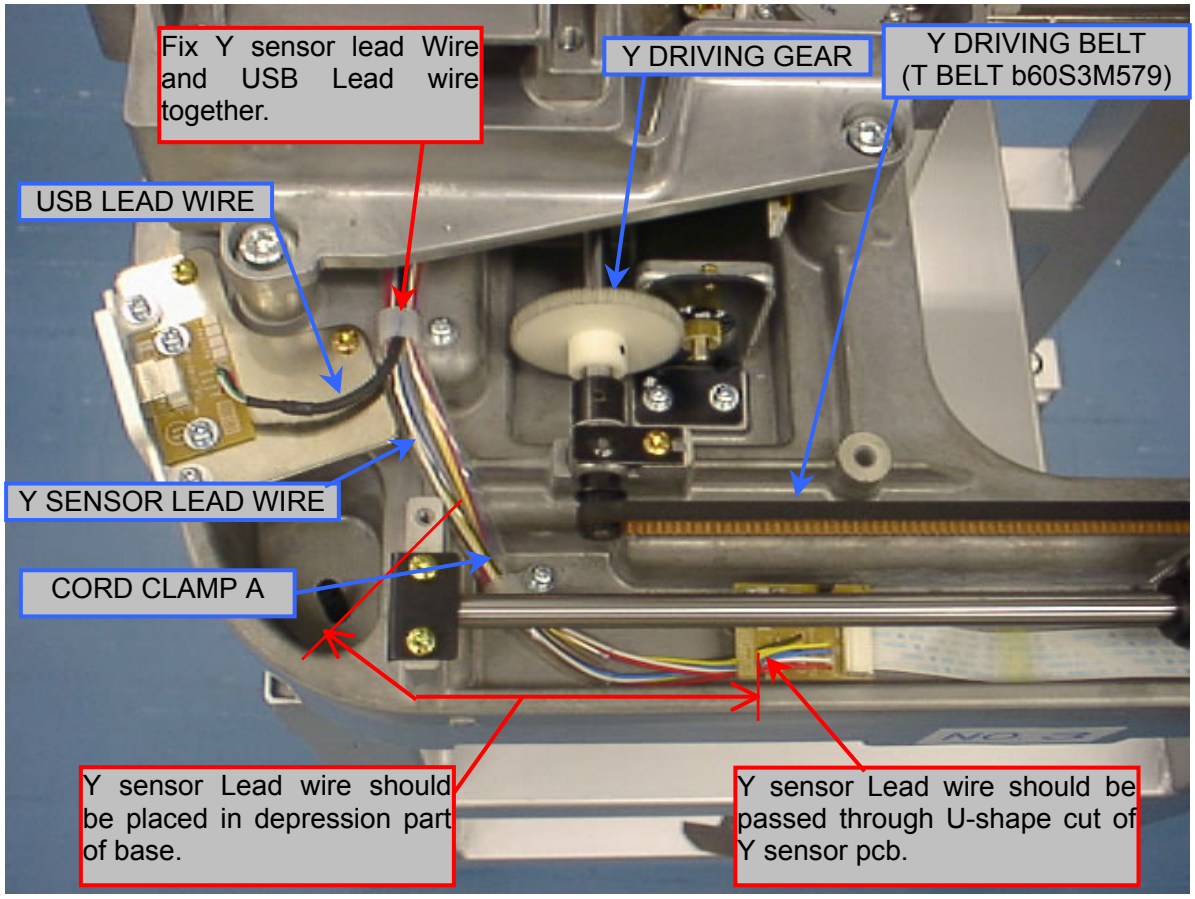

2. Right side of Base

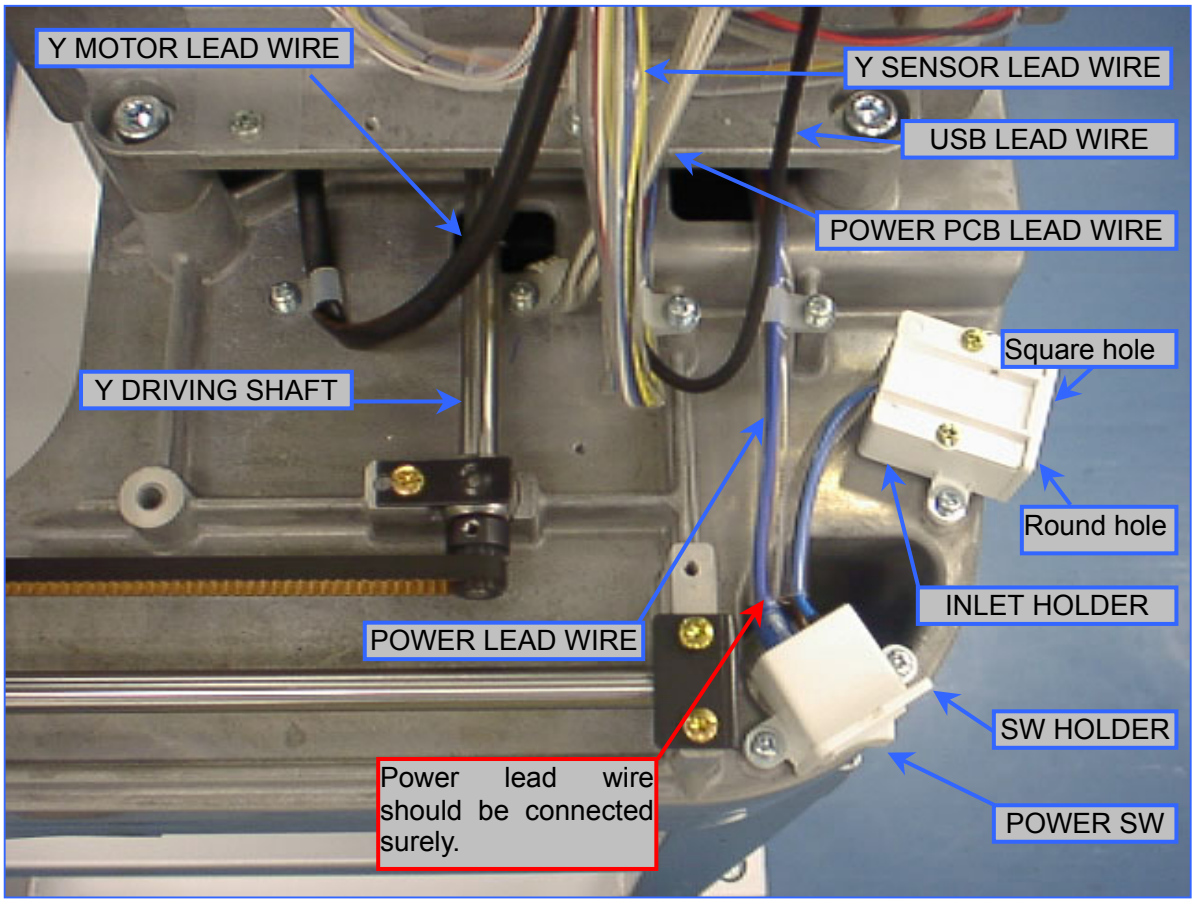

www.promelectroavtomat.ru

3. Y Feed FFC (1)

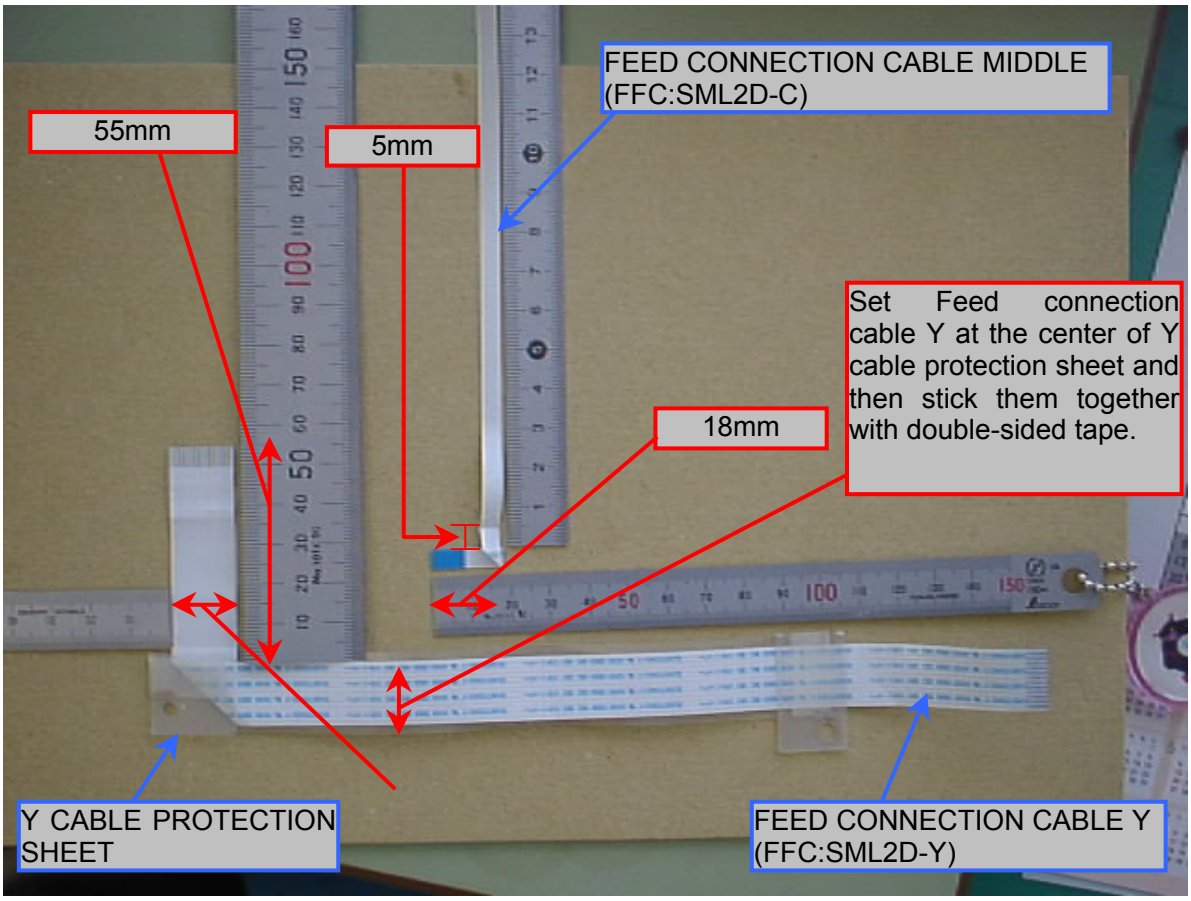

4. Y Feed FFC (2)

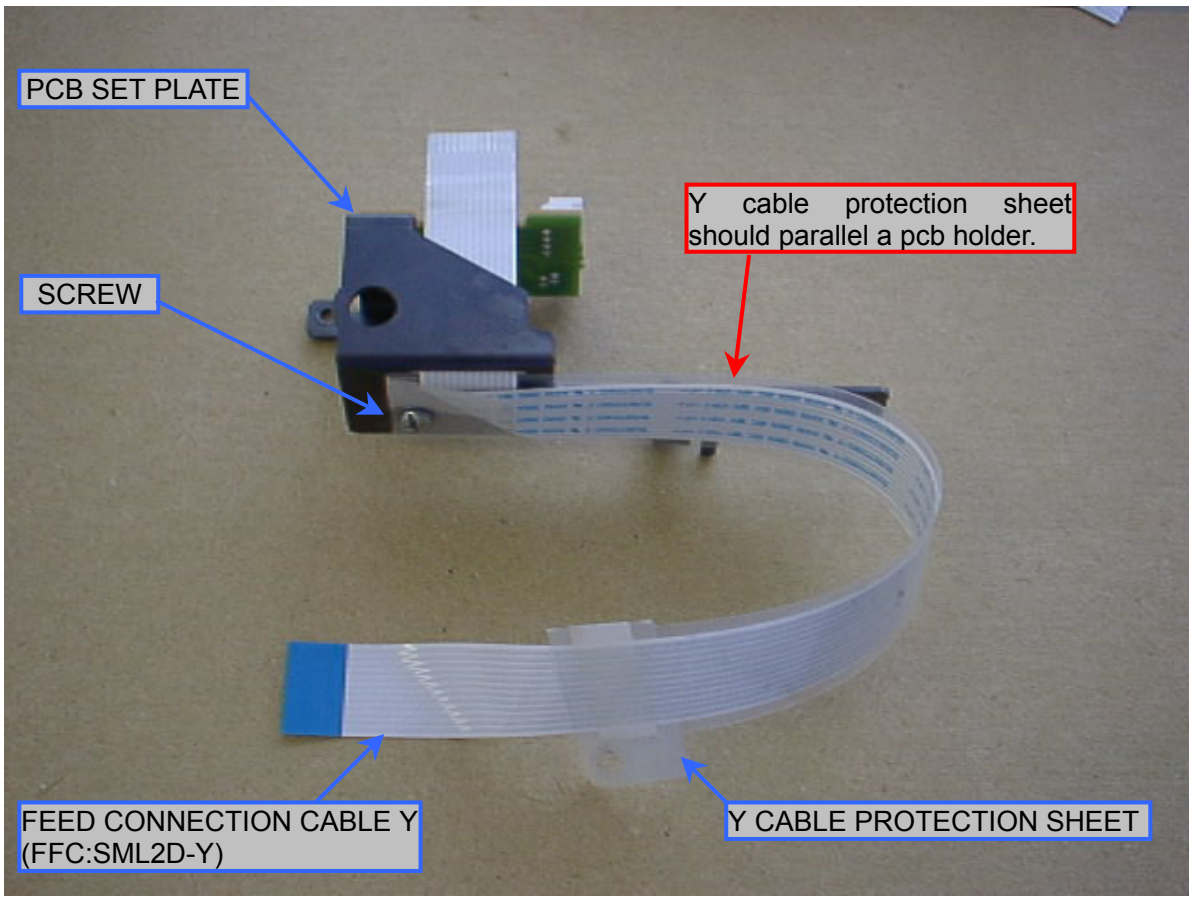

5. Y Feed FFC (3)

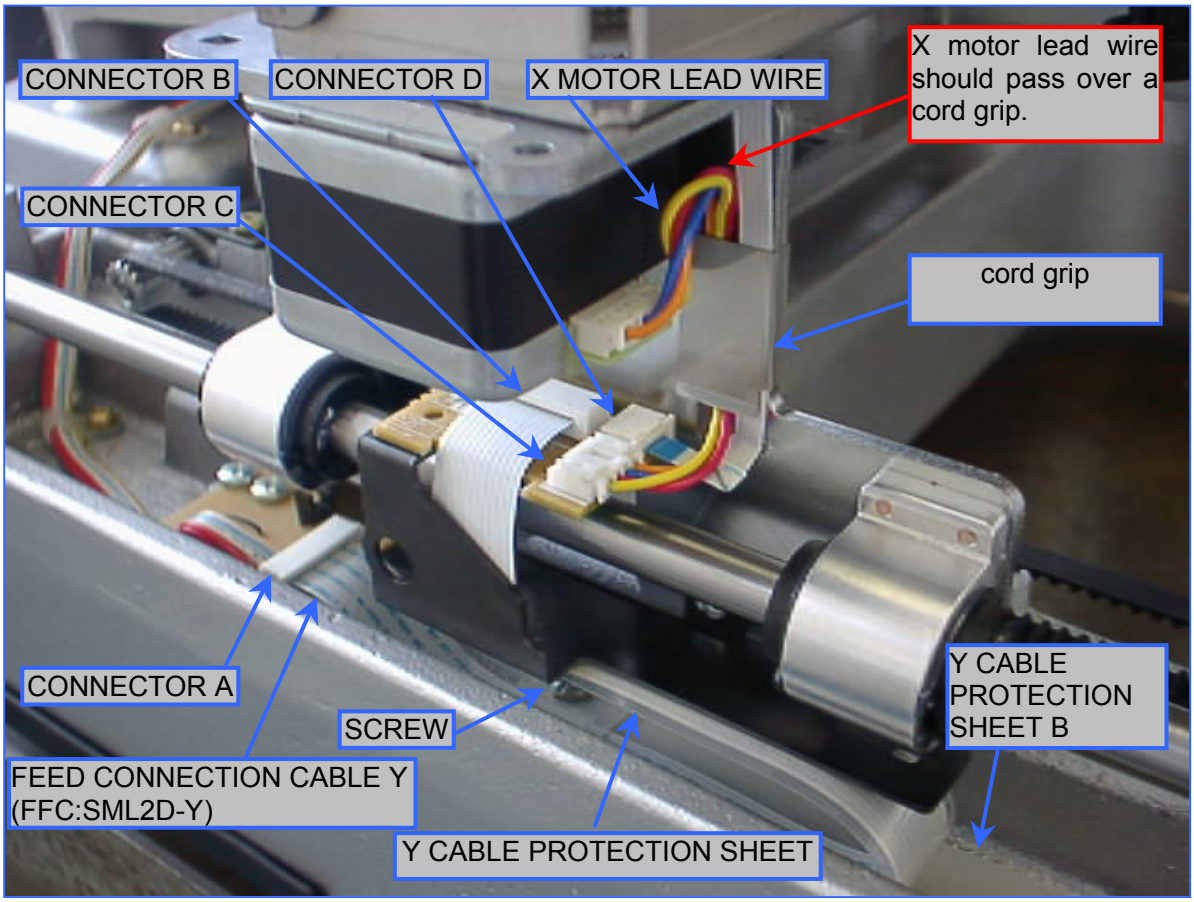

6. X Feed FFC (1)

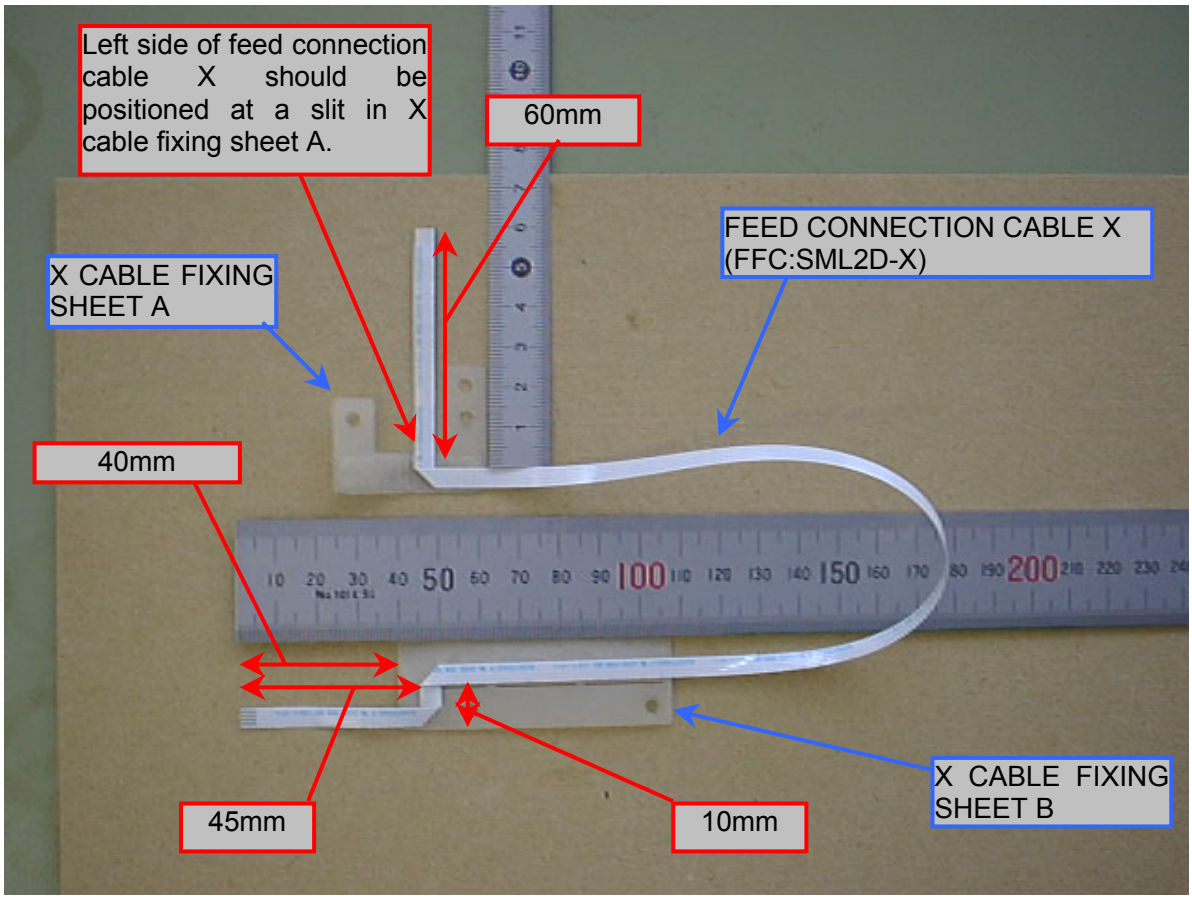

7. X Feed FFC (2)

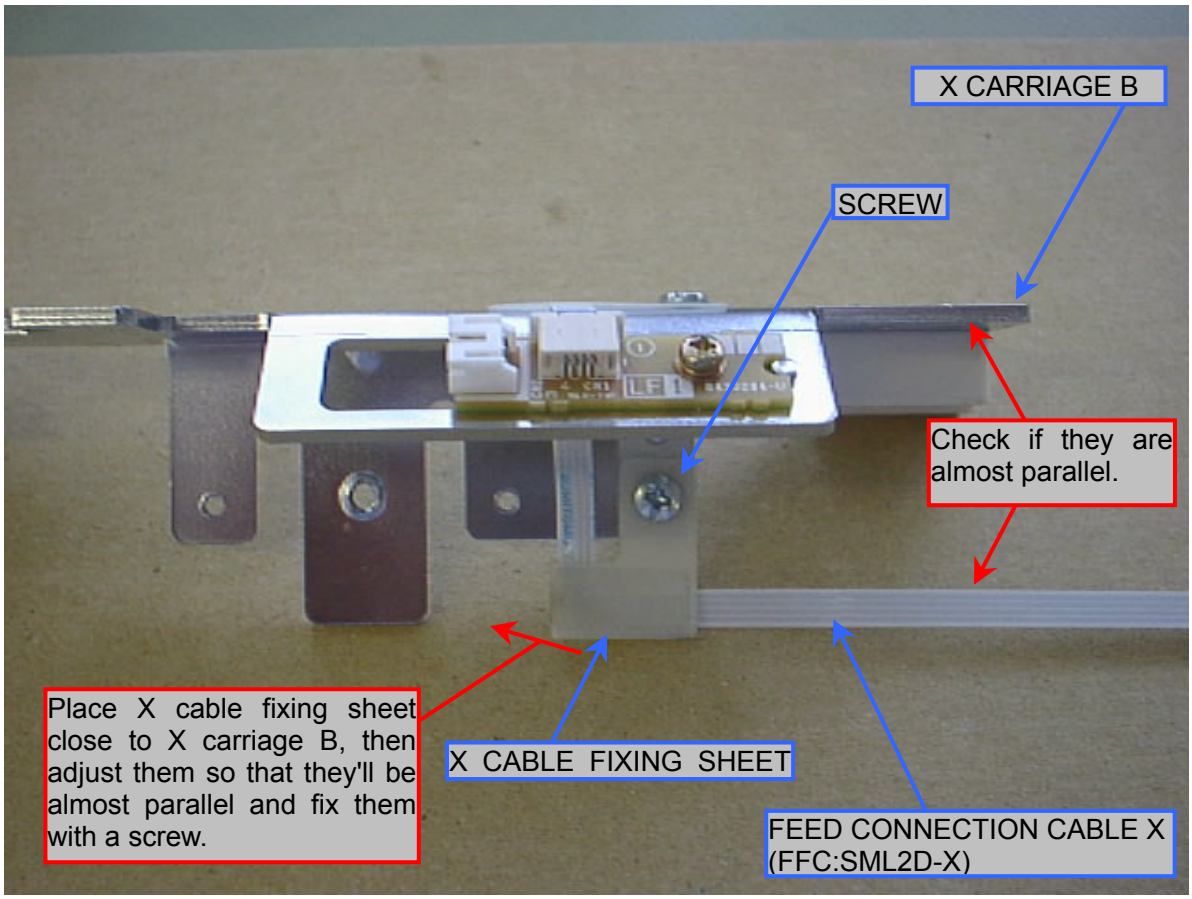

8. X Feed FFC (3)

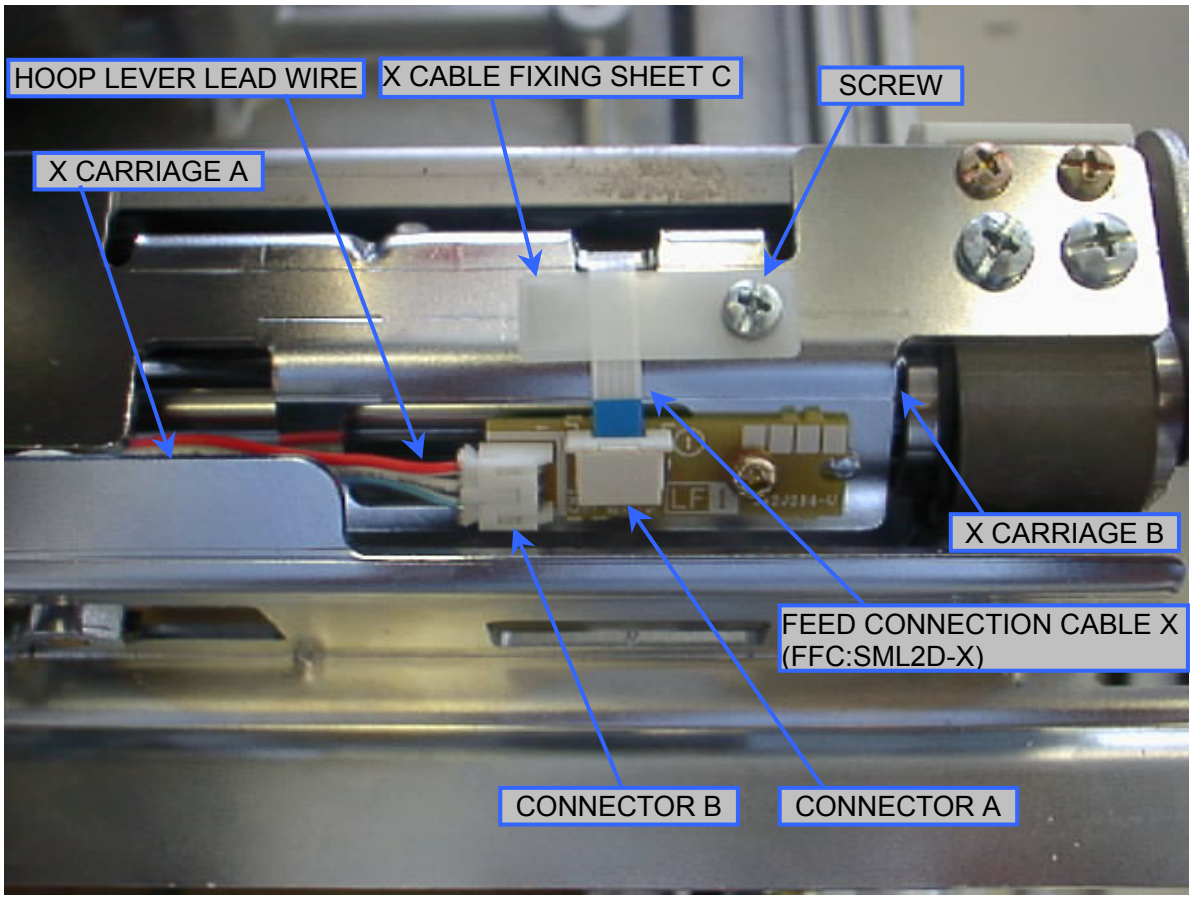

9. X Feed FFC (4)

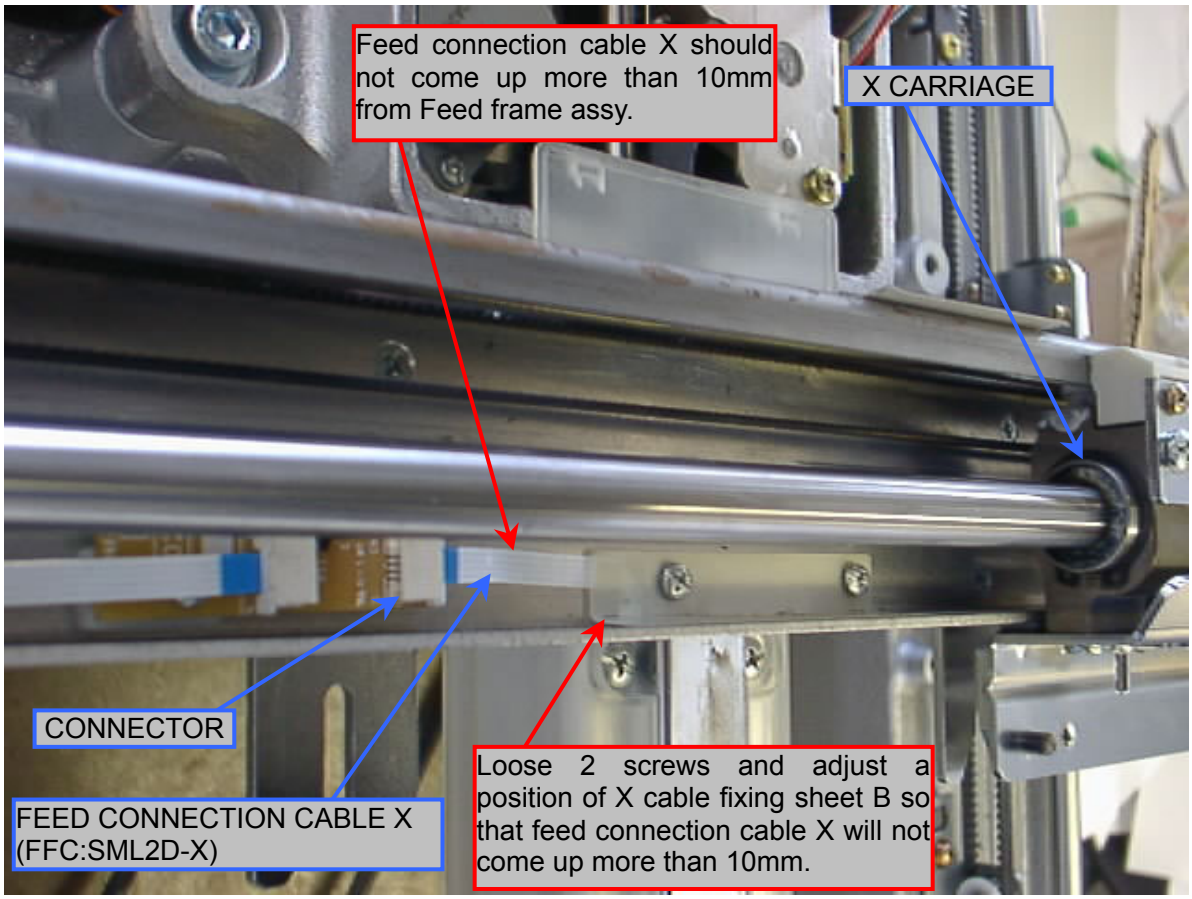

10. X Feed FFC (5)

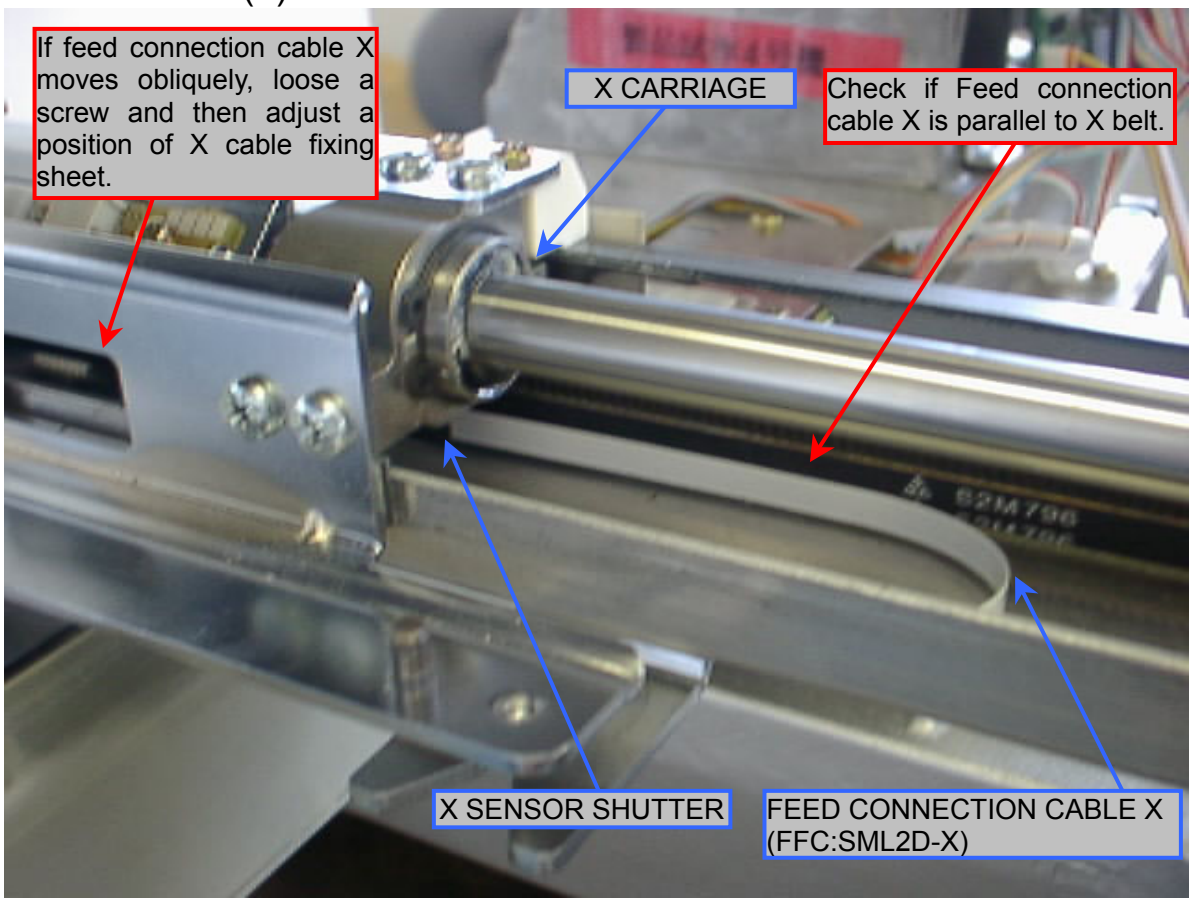

11. Floppy disk drive (1)

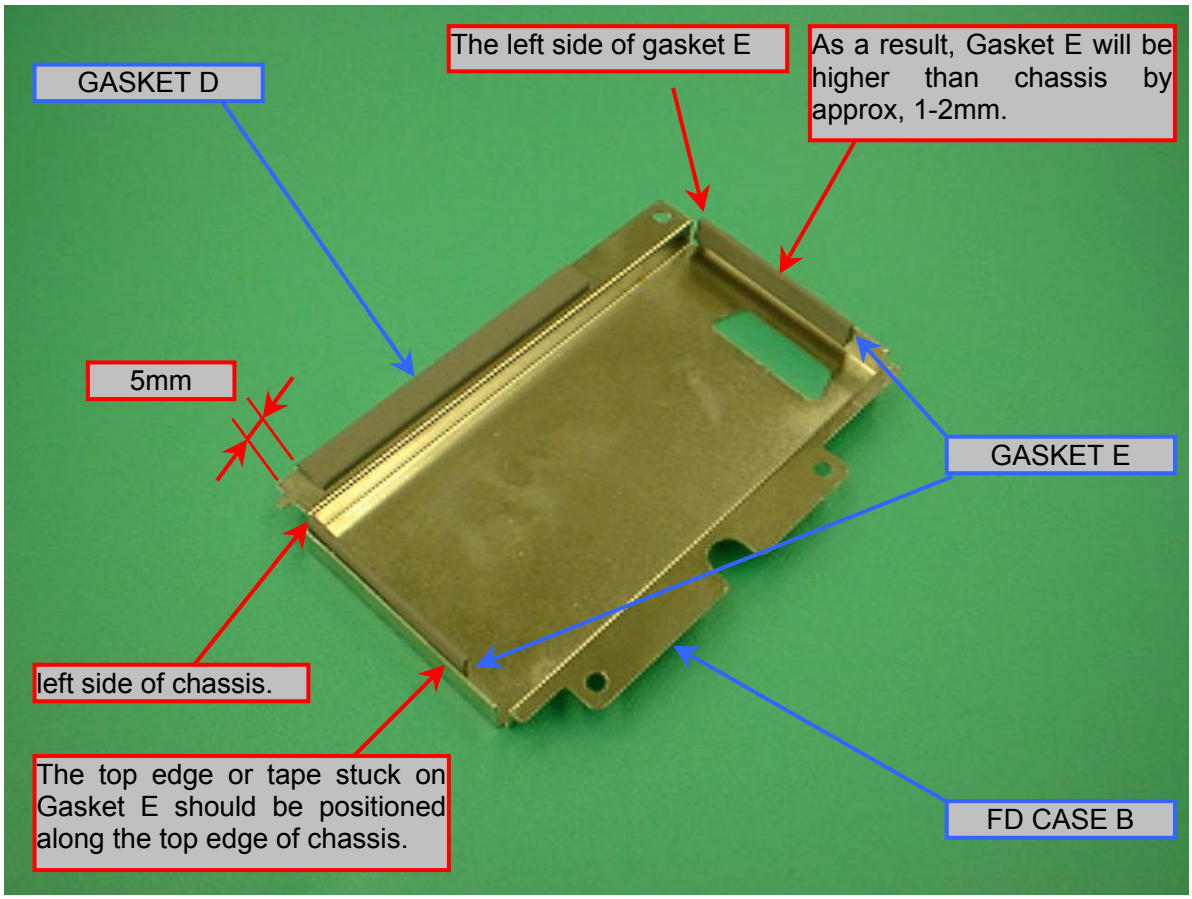

12. Floppy disk drive (2)

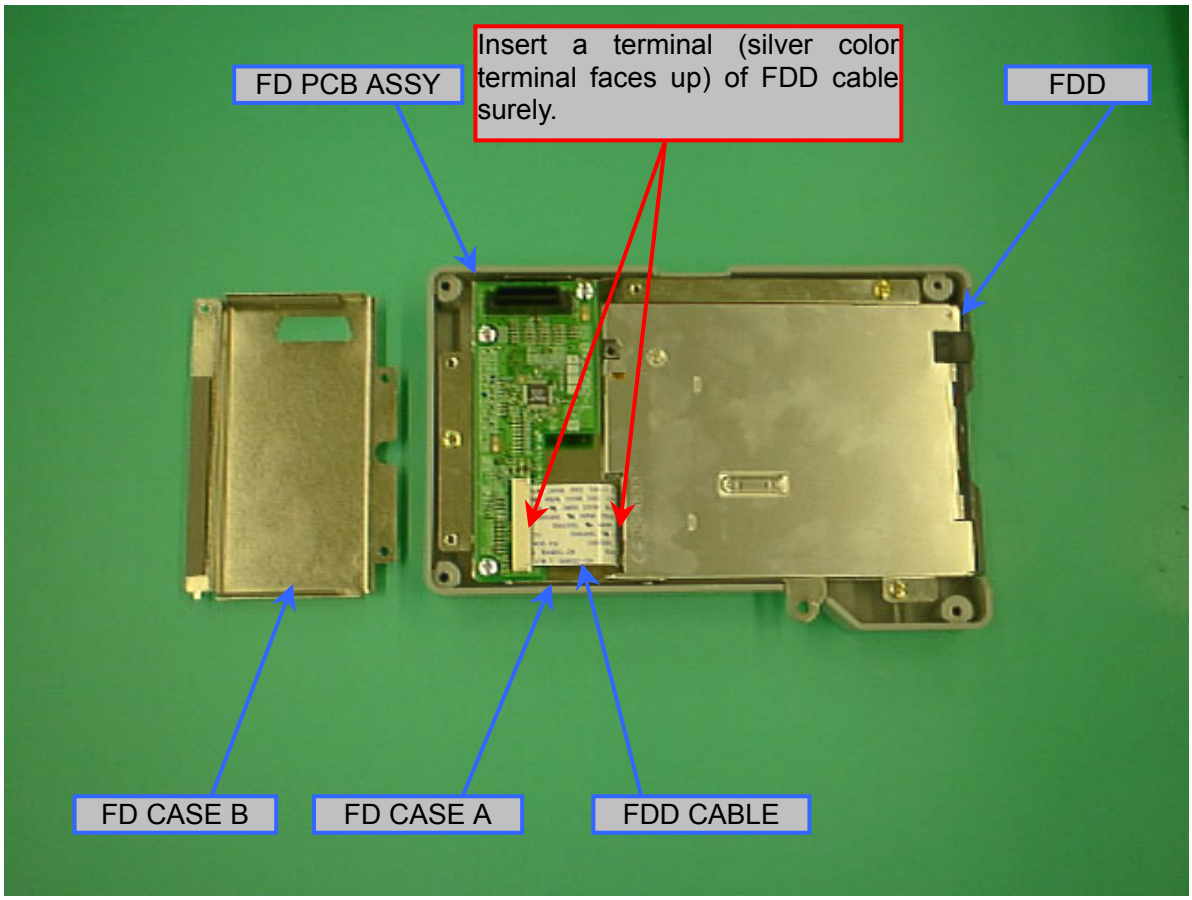

www.promelectroavtomat.ru

13. Operation Panel (1)

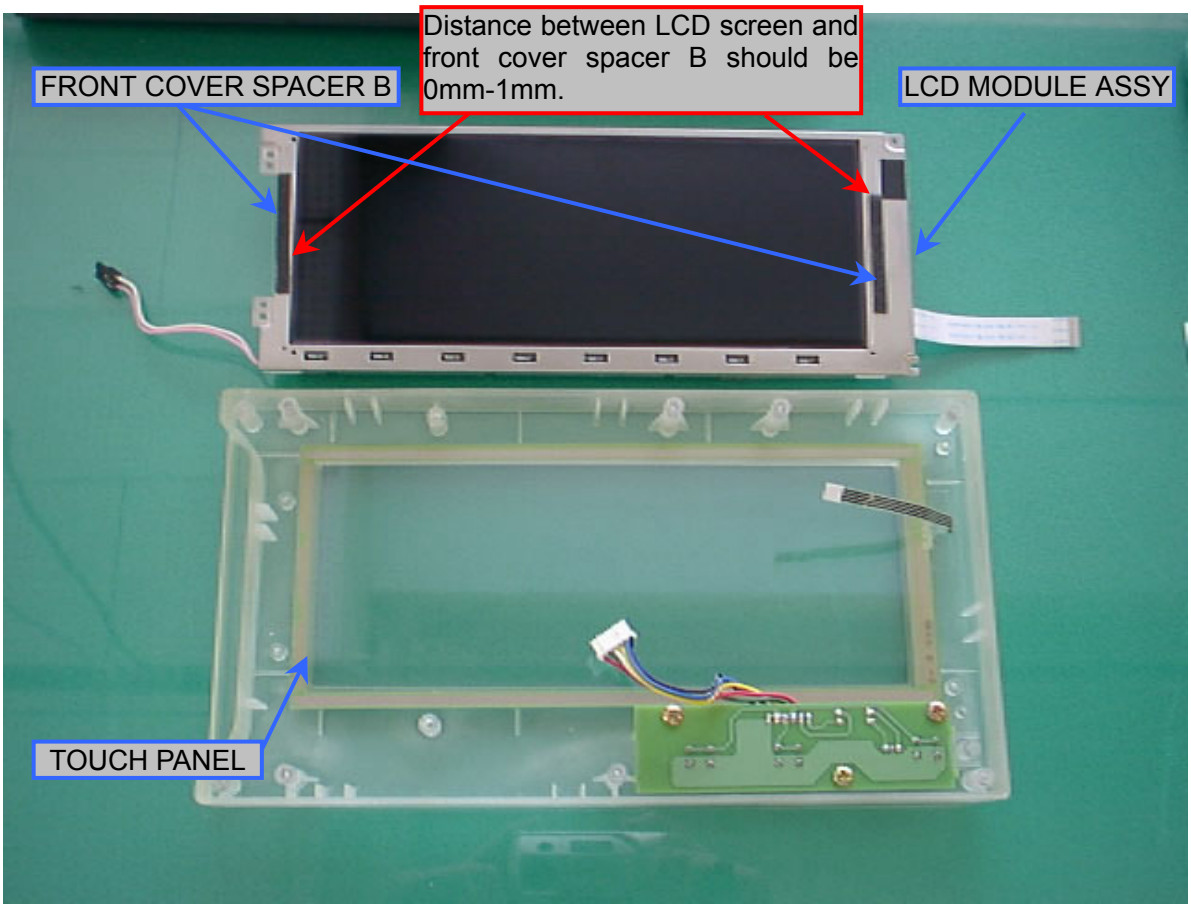

14. Operation Panel (2)

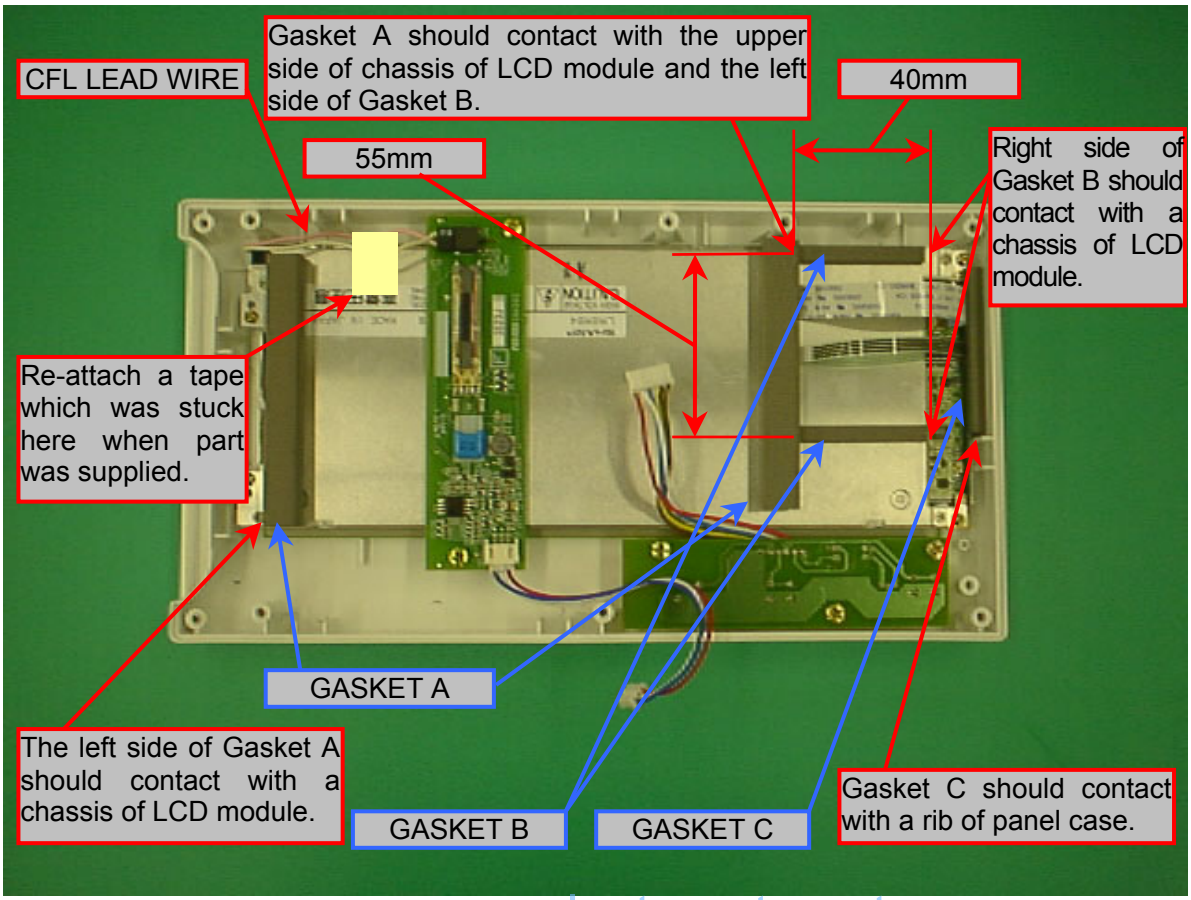

www.promelectroavtomat.ru

15. Operation Panel (3)

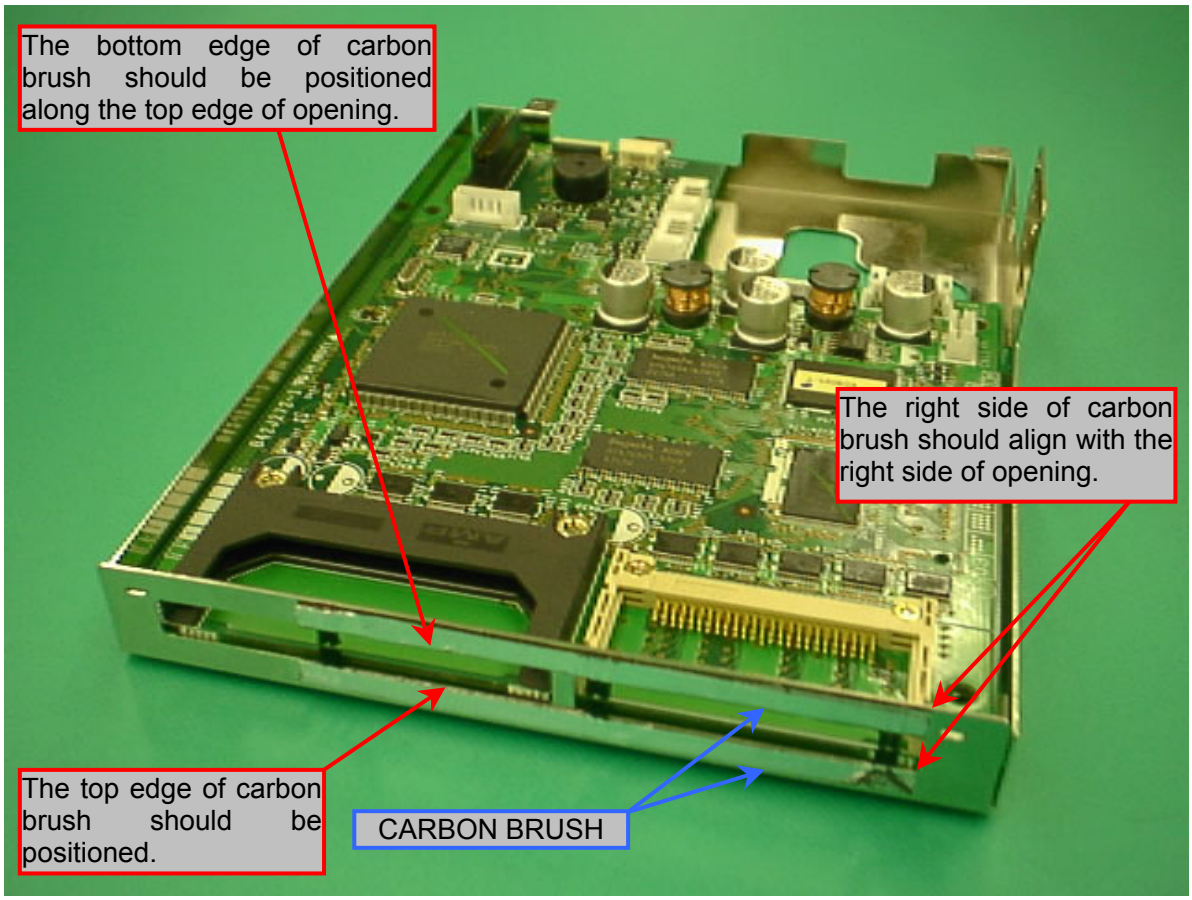

16. Operation Panel (4)

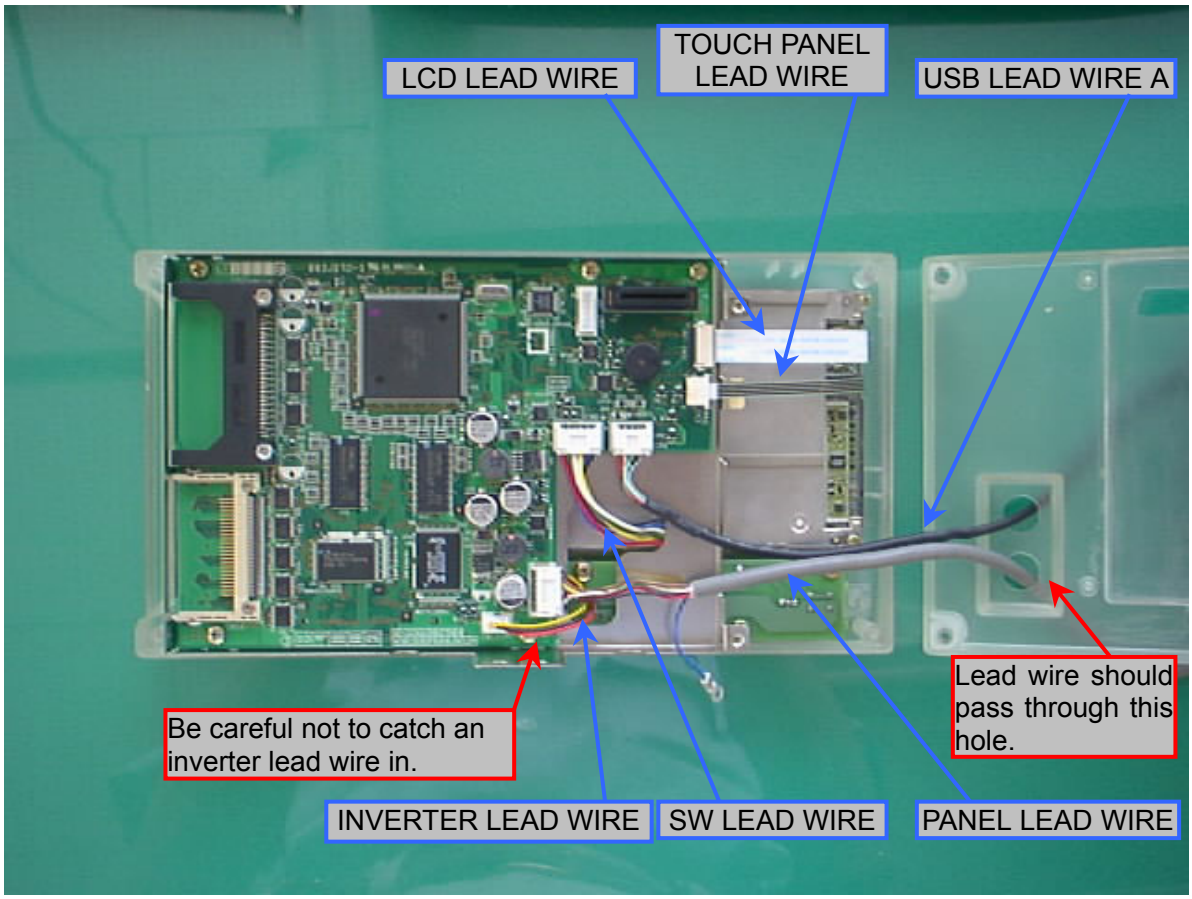

www.promelectroavtomat.ru

17. Operation Panel (5)

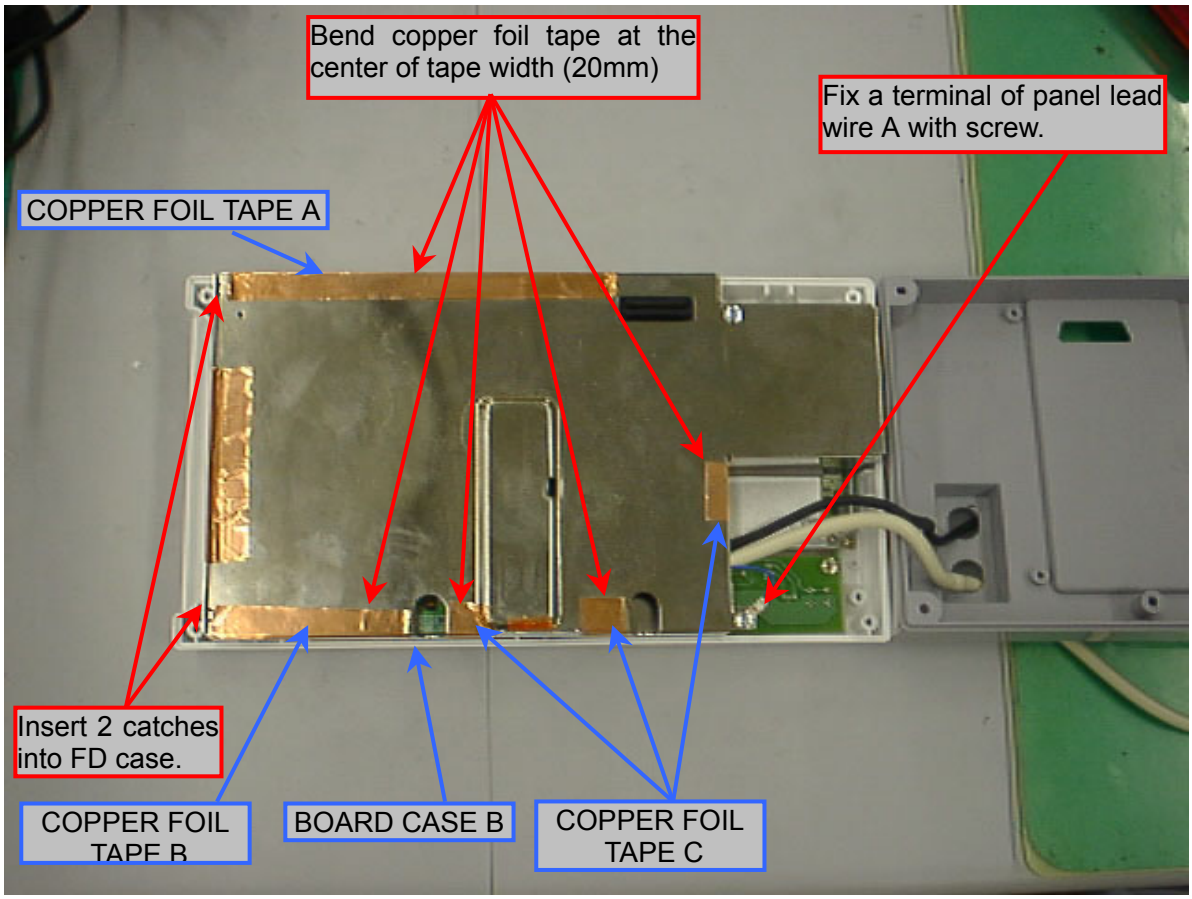

18. Operation Panel (6)

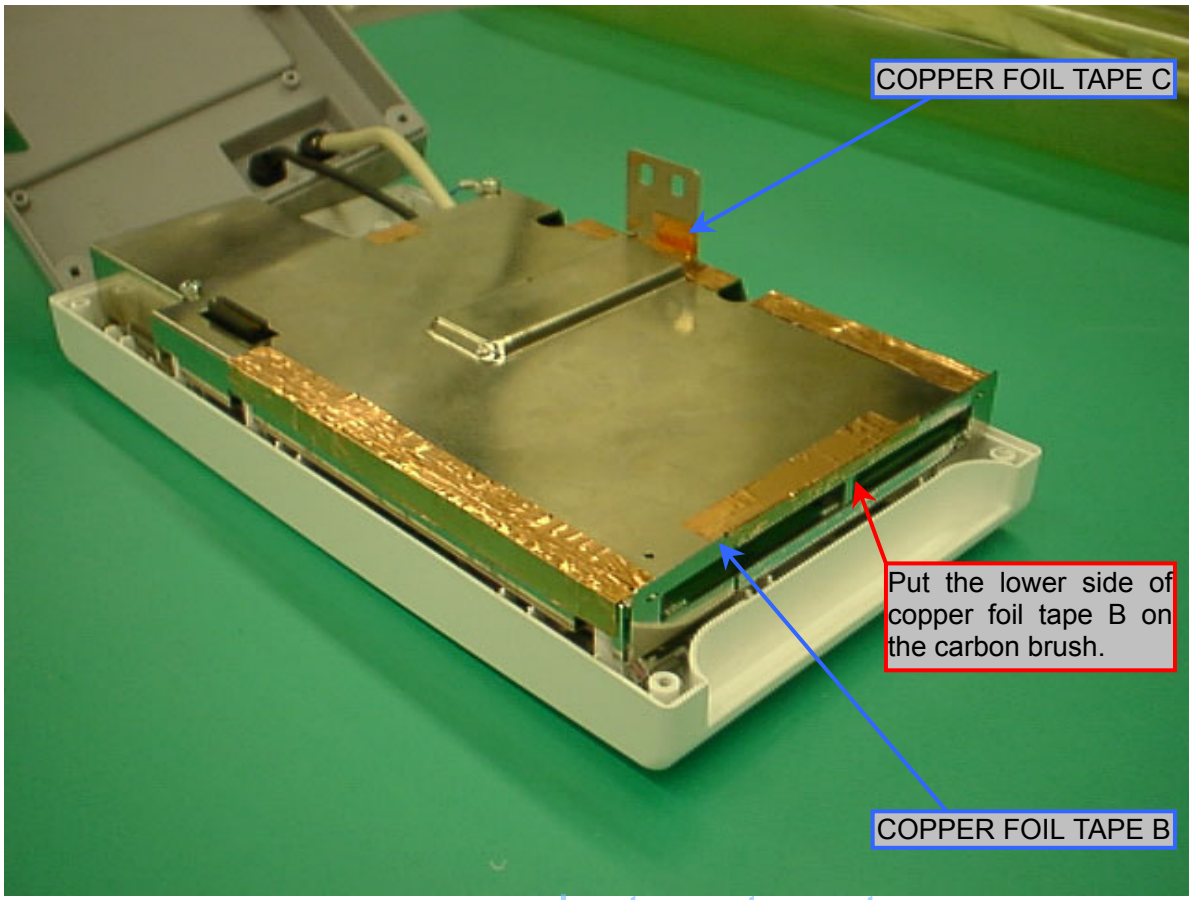

www.promelectroavtomat.ru

19. Operation Panel (7)

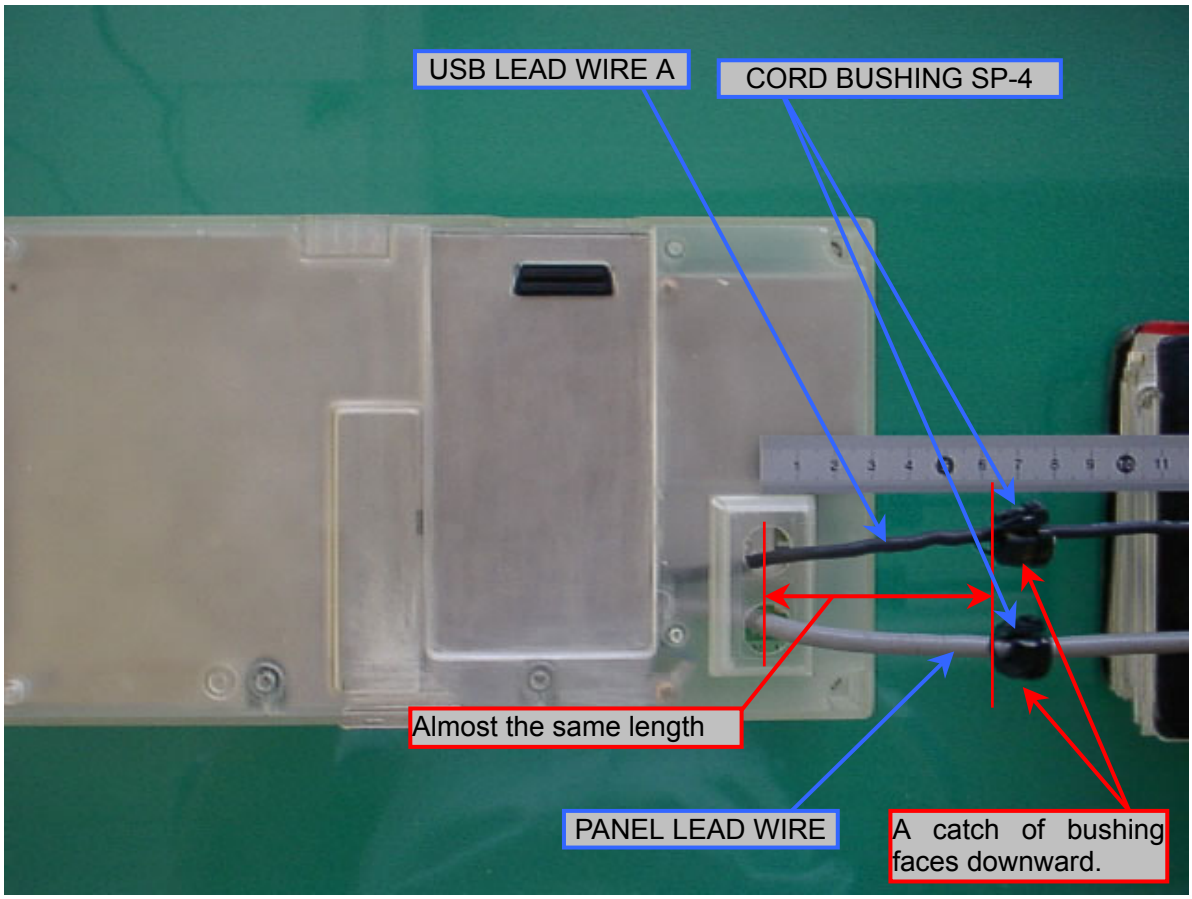

20. Tension base (1)

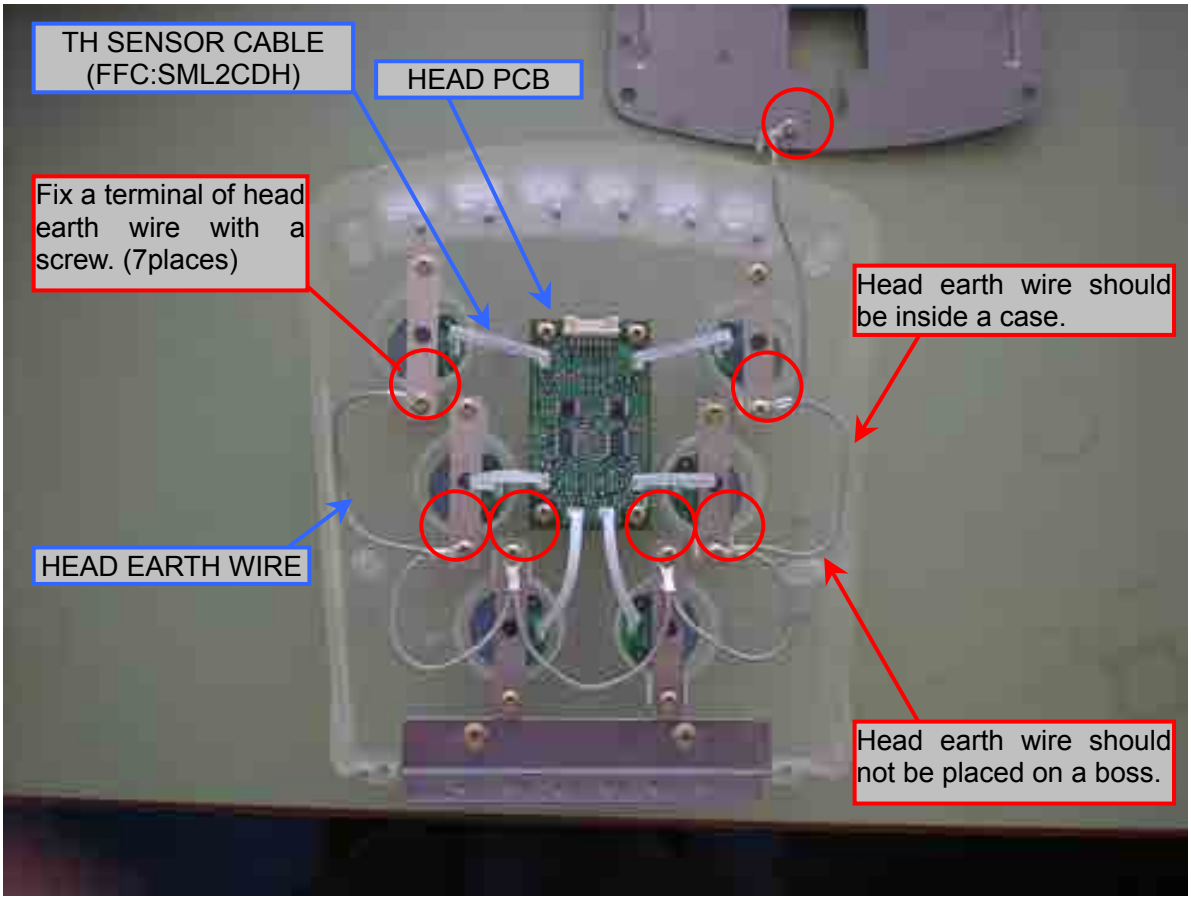

21. Tension base (2)

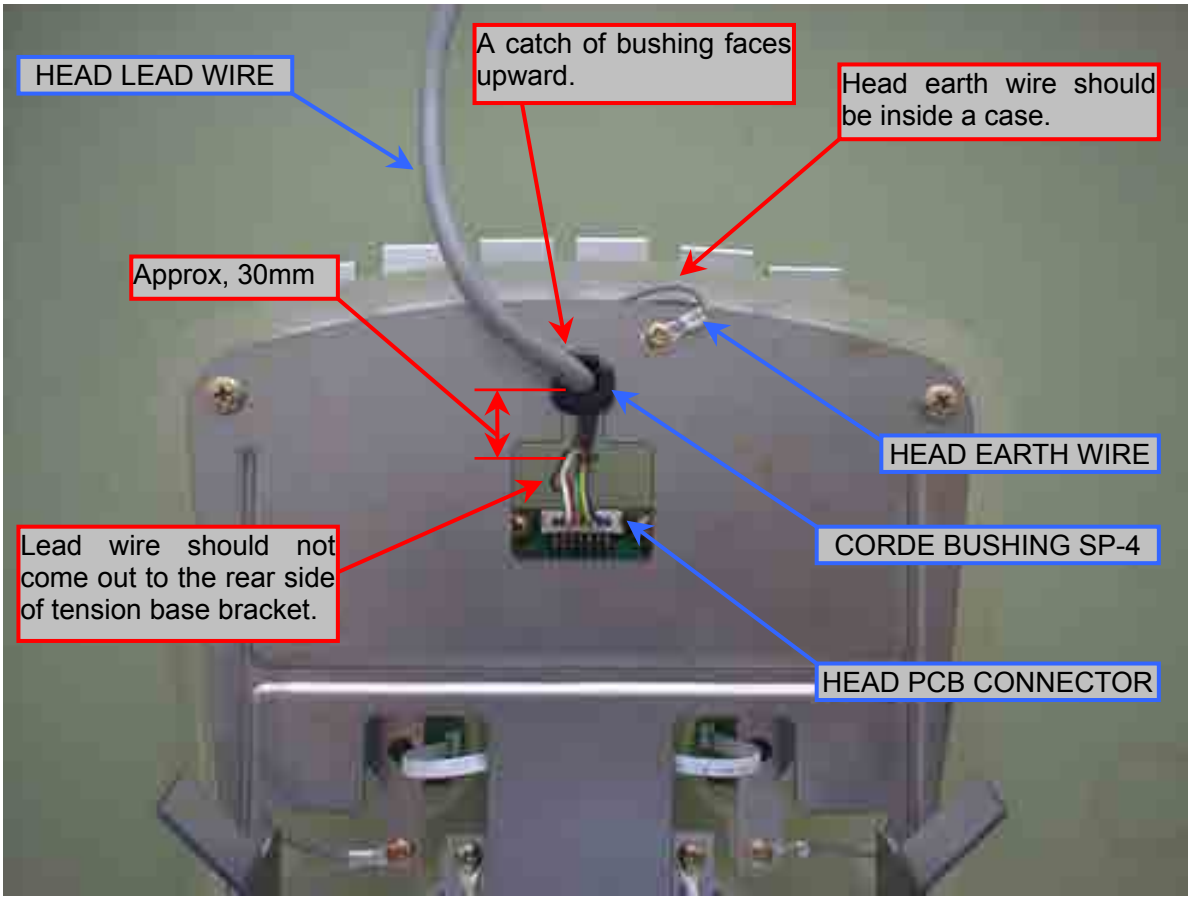

22. Upper side of arm (1)

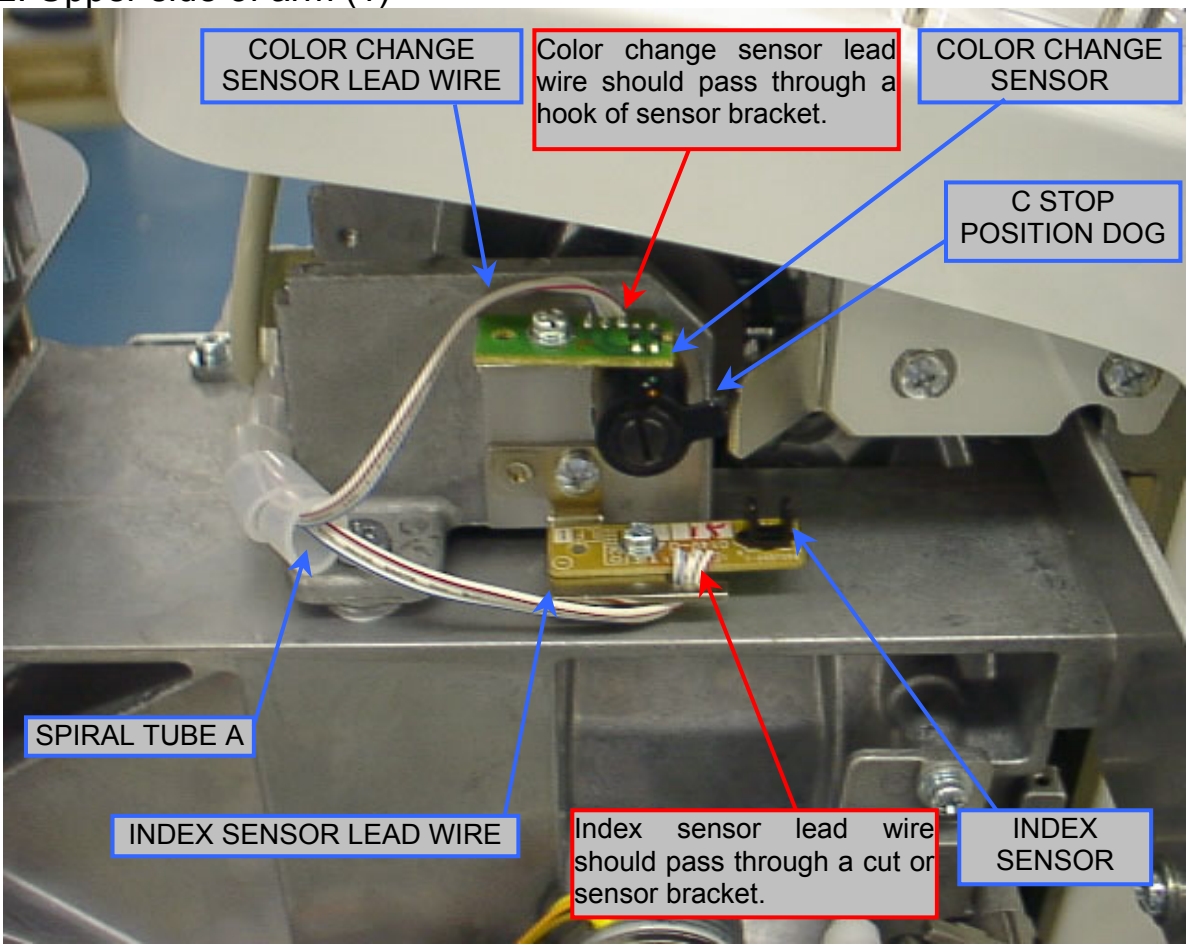

www.promelectroavtomat.ru

23. Upper side of arm (2)

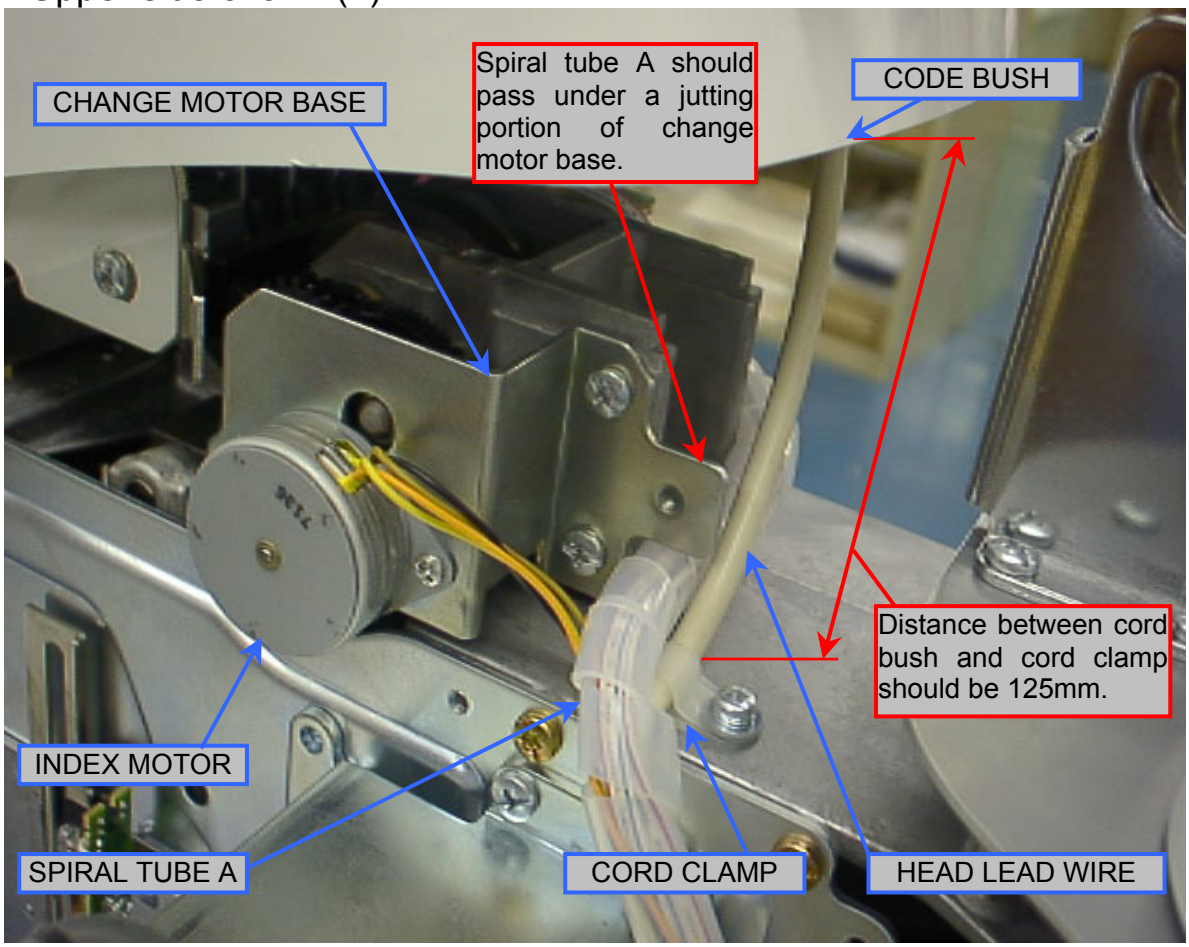

24. Left side of arm

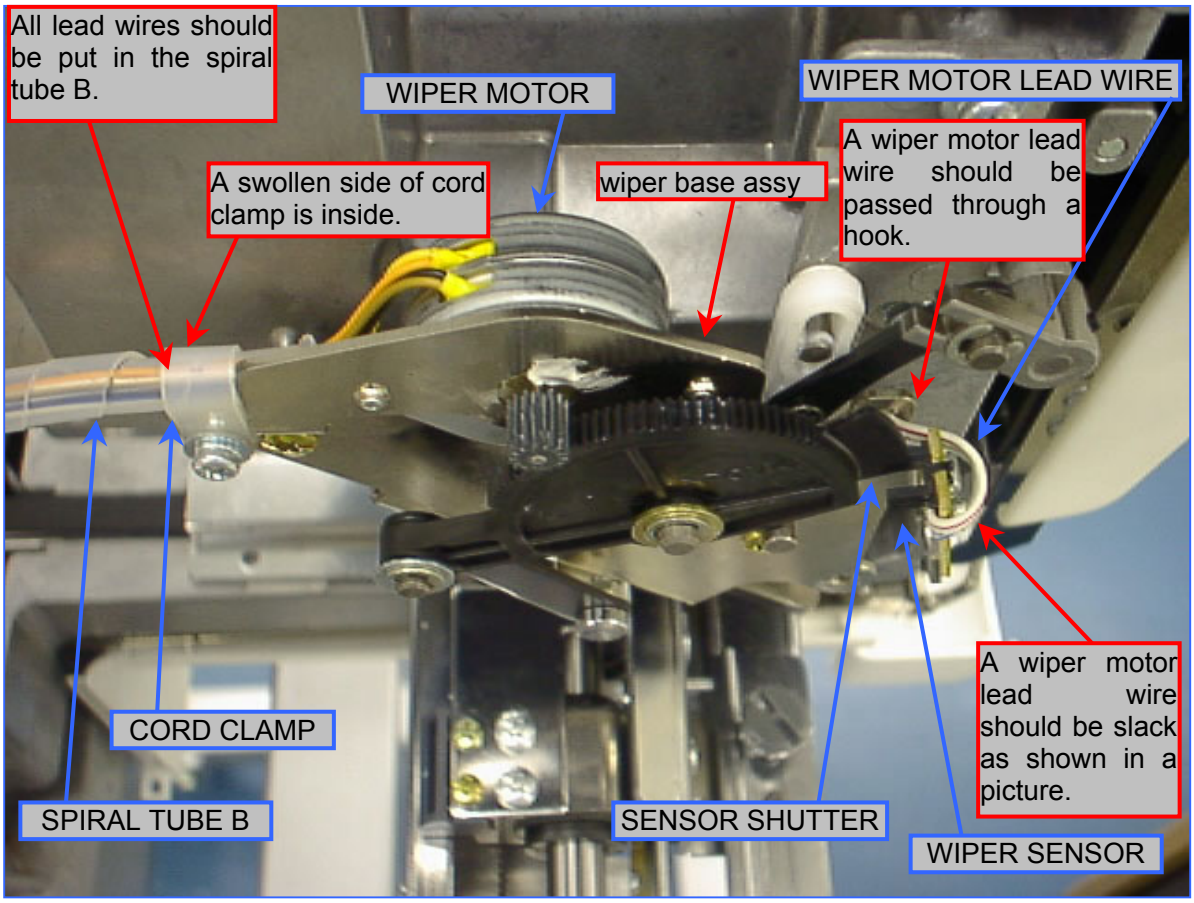

www.promelectroavtomat.ru

25. Right side of arm

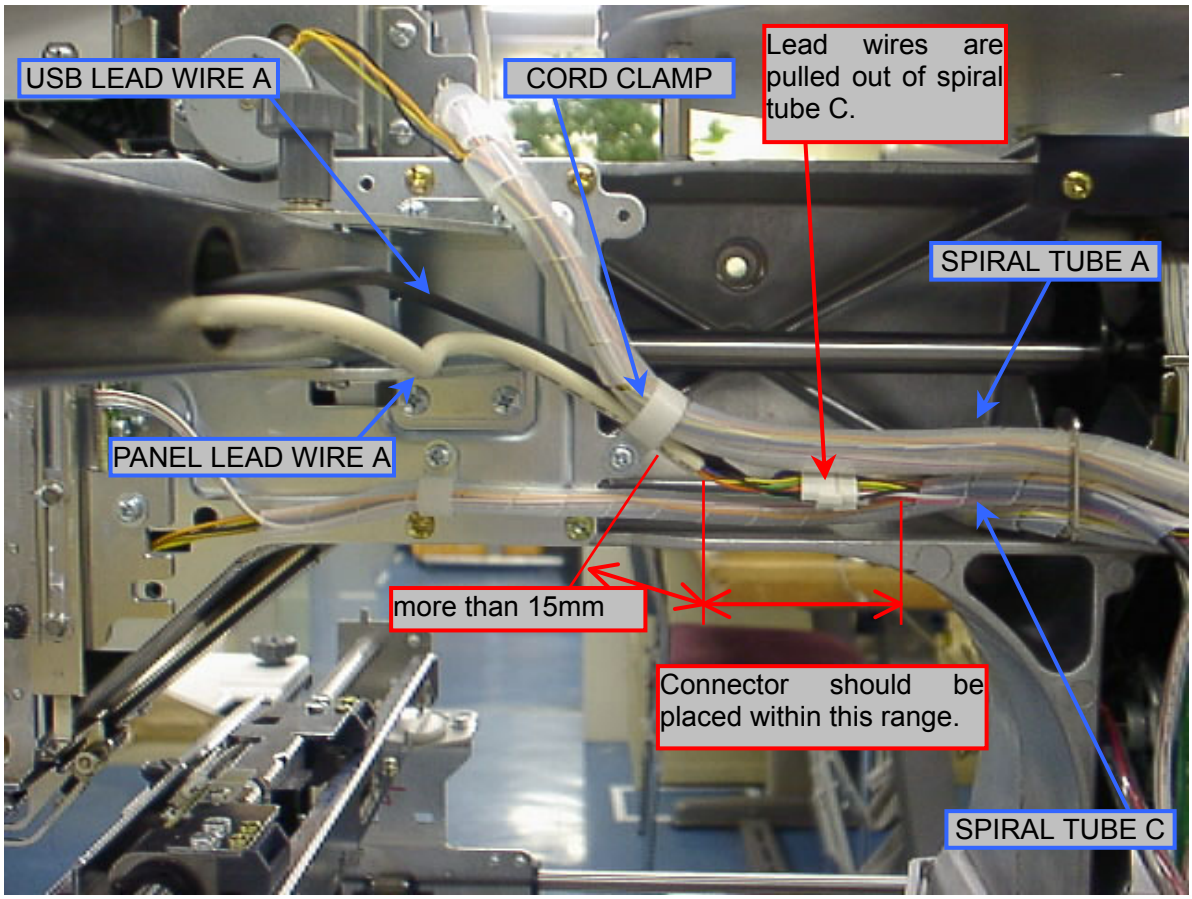

26. Upper part of main pcb

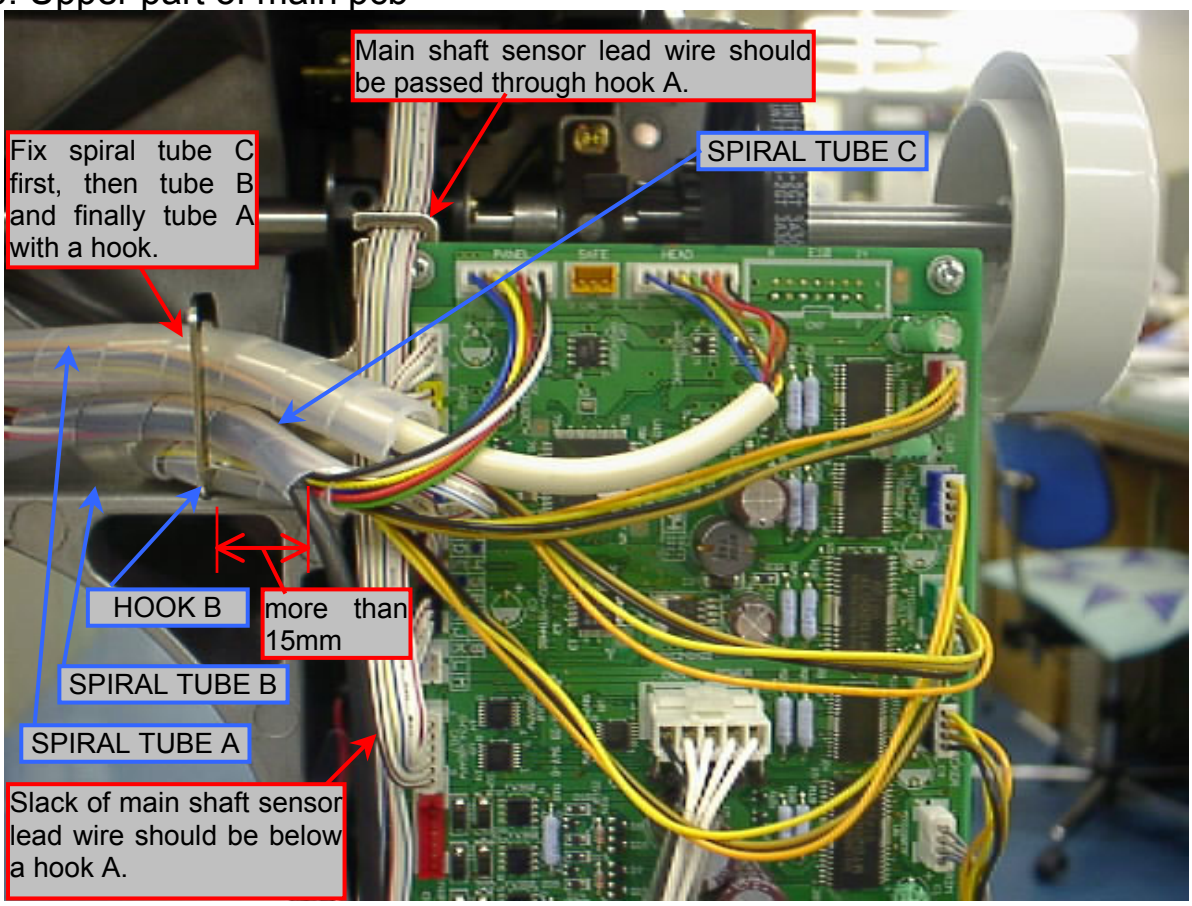

www.promelectroavtomat.ru

27. Lower part of main pcb

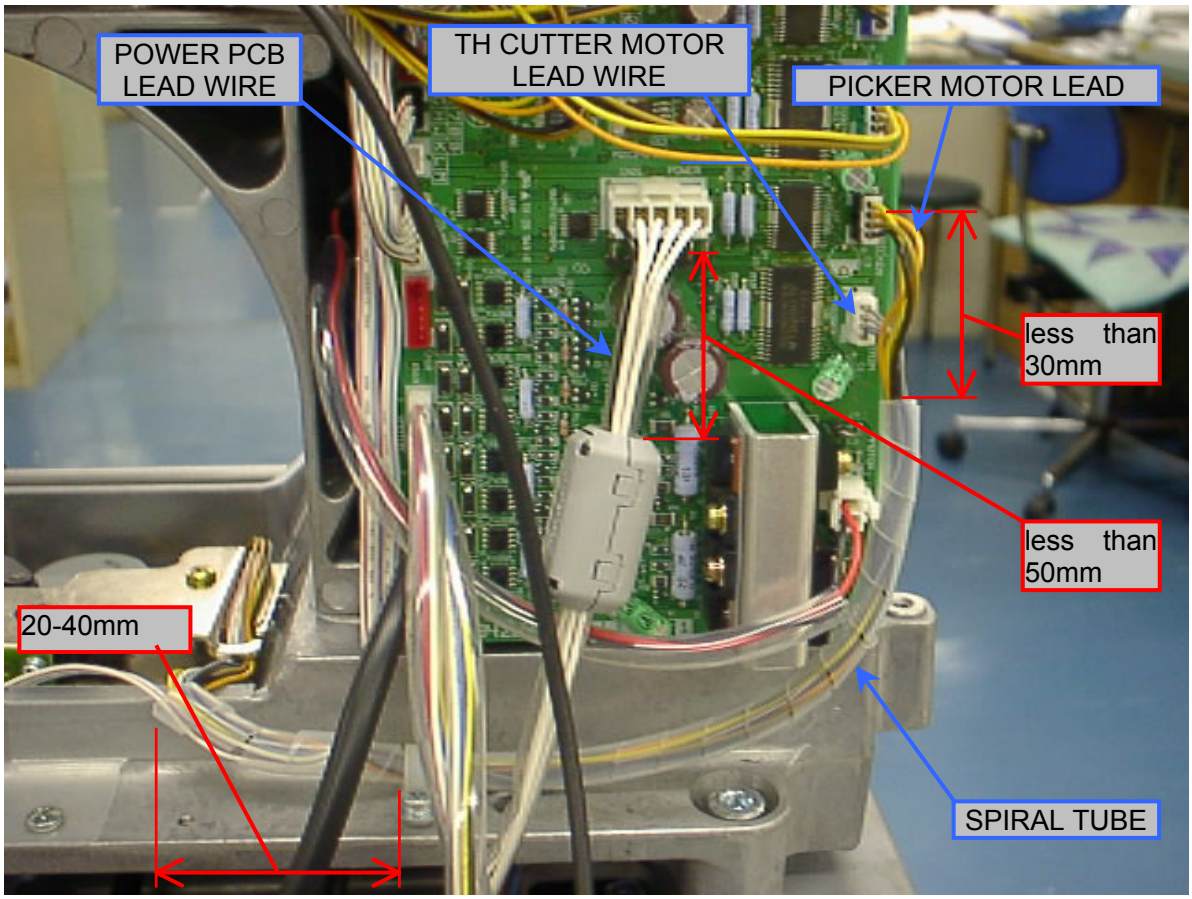

28. Bed

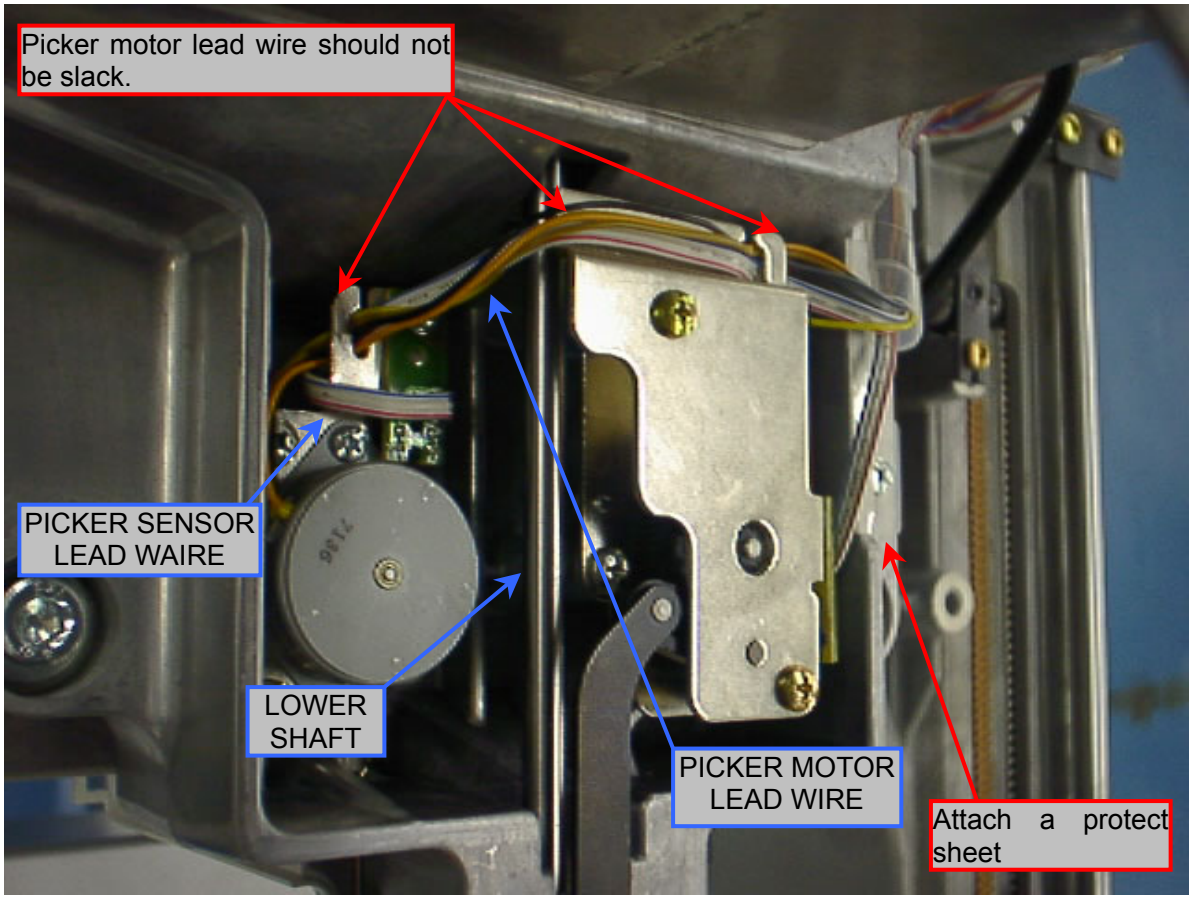

www.promelectroavtomat.ru

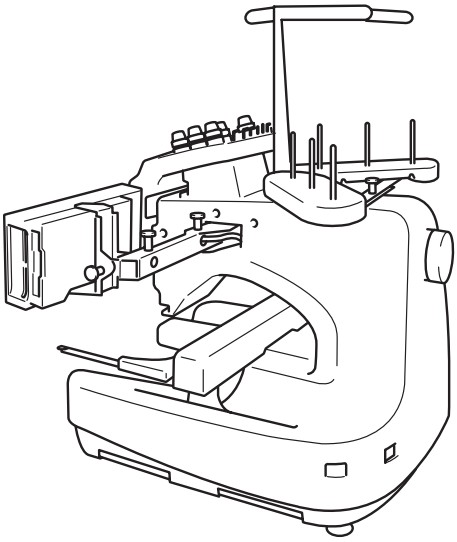

PR600

PR600
33H03HF884T01

www.promelectroavtomat.ru